PROPOSAL, BOND
AND AFFIDAVIT
FOR THE CONSTRUCTION OF

TORRANCE TRANSIT PARK AND RIDE REGIONAL TERMINAL
PHASE 1 – ROUGH GRADING - FEAP 764

B2015-35

Craig Bilezerian
City Engineer

October 2015

TABLE OF CONTENTS

SECTION A - NOTICE INVITING BIDS

NOTICE INVITING BIDS A-1

SECTION B - INSTRUCTIONS TO BIDDERS

INSTRUCTIONS TO BIDDERS B-1

SECTION C - BID DOCUMENTS

BIDDER'S SUBMITTAL C-1

BID FORM [BID SCHEDULE]…… …… C-2

ACKNOWLEDGMENT OF ADDENDA RECEIVED C-3

CONTRACTOR'S AFFIDAVIT C-4

LIST OF SUBCONTRACTORS C-6

REFERENCES C-8

VIOLATIONS OF FEDERAL, STATE OR LOCAL LAWS C-10

DISQUALIFICATION OR DEBARMENT C-11

BID BOND…… C-12

SECTION D - DOCUMENTS TO BE COMPLETED AND DELIVERED TO CITY AFTER AWARD OF CONTRACT BY THE CITY COUNCIL

PERFORMANCE BOND D-1

LABOR AND MATERIAL BOND D-3

PUBLIC WORKS AGREEMENT D-6

CONSTRUCTION OR SERVICE CONTRACT ENDORSEMENT D-7

WORKERS' COMPENSATION INSURANCE CERTIFICATION D-9

SECTION E - SPECIAL PROVISIONS

SECTION F - NOT USED

SECTION G - PROJECT MANUAL CSI SPECIFICATION

The following CSI formatted specifications are included to supplement the 2012 Standard Specifications for Public Works Construction "Greenbook" format specifications provided in Section E. Should a conflict occur between the provisions in the Greenbook specifications and these CSI specifications, refer to the Special Provisions Section 2-5.2 Precedence of Contract Documents on pages 28-29 for the order of precedence.

APPENDIX A - GEOTECHNICAL REPORT

APPENDIX I: CITY OF TORRANCE PUBLIC WORKS AGREEMENT, PERMIT AND BUSINESS LICENSE

APPENDIX II: CITY OF TORRANCE STANDARD PLANS

APPENDIX III: STANDARD PLANS FOR PUBLIC WORKS CONSTRUCTION (SPPWC)

APPENDIX IV: CONSTRUCTION & DEMOLITION WASTE MANAGEMENT PLAN (WMP)

APPENDIX V: SWPPP

APPENDIX VI: PROJECT CONSTRUCTION SIGNS

APPENDIX VII: MANUFACTURER'S DRAWINGS

ARCHITECT'S CERTIFICATION

TORRANCE TRANSIT PARK AND RIDE REGIONAL TERMINAL
PHASE 1 – ROUGH GRADING

B2015-35

I hereby certify that this specification was prepared by me or under my direct supervision and that I am a duly Licensed Professional Architect under the laws of the State of California.

Print Name: Greg Coles AIA

Signature:

Date: 10/06/2015

License #: C26231

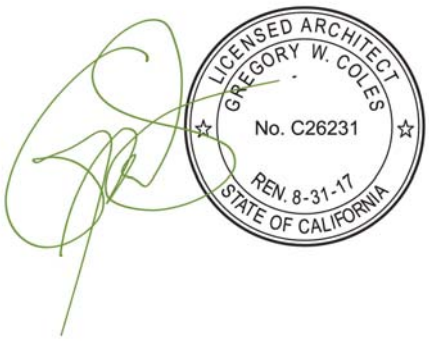

SECTION A

NOTICE INVITING BIDS

CITY OF TORRANCE, CALIFORNIA

NOTICE INVITING BIDS

Notice is hereby given that sealed bids for performing the following described work will be received at the Office of the City Clerk of the City of Torrance, California, **until 3:00 p.m. on Wednesday, October 28, 2015,** after which time they will be publicly opened and read at 3:15 p.m. in the Council Chambers of said City:

Bid for Torrance Transit Park and Ride Regional Terminal Phase 1 - Rough Grading
B2015-35

Plans and Specifications are available on the City's website at http://www.torranceca.gov/23404.htm.

Those who only view and/or print the Plans and Specifications from the City's website will not automatically be added to the City's Plan Holder list for this project.

The official Bidder's Submittal packet must be obtained from the Office of the City Clerk, City Hall, 3031 Torrance Boulevard, Torrance, California. Contact the City Clerk's office at (310) 781-7530 or CityClerk@TorranceCA.gov for more information. There is no cost if the Bidder's Submittal is obtained at City Hall. A payment of $5 is required if requested by mail. The amount includes tax and is not refundable. A prospective bidder must provide to the City Clerk the firm's name, address, telephone and fax numbers, a contact person and a valid email address. This will ensure that your firm is listed as a "Plan Holder" and that you will be informed of any and all information issued subsequent to obtaining the official form of Proposal. Addenda will be issued only by email and only to those that provide the required information to the City Clerk. Receipt of any Addendum must be acknowledged by a bidder in its submitted form of Proposal. **If a bidder submits its Bidder's Submittal on forms other than the official Bidder's Submittal forms, the City may declare the bid as non-responsive**.

There will be a mandatory pre-bid meeting held on Monday, October 19, 2015 at 10:00 A.M. at the Torrance Public Works Department Training room located at 20500 Madrona Avenue, Torrance, CA 90503 and it will be followed by a mandatory job walk.

Full-size 30" x 42" Plans and a bound Specifications booklet may also be obtained at the same Office of the City Clerk, upon payment of $100 if obtained at City Hall, or payment of $140 if requested by mail. Both amounts include tax. Neither amount is refundable. The $100 or $140 includes a copy of the official Bidder's Submittal packet. If requesting any item(s) by mail, please send check to the following:

CITY OF TORRANCE
OFFICE OF THE CITY CLERK
3031 TORRANCE BLVD
TORRANCE, CA 90509
ATTN: B2015-35

The Engineer's estimate of the contract total is between $2,400,000 and $2,600,000. All work shall be completed within ninety (90) working days from the date of the Notice to Proceed (NTP).

Per Division 2, Chapter 2 of the Torrance Municipal Code, the Torrance City Council may reject any and all bids, waive any informality or irregularity in such bids, and determine the lowest responsible bidder. No facsimile bids shall be accepted by the City.

Substitution of securities for withheld funds is permitted per Section 22300 of the Public Contract Code.

The City has determined that a Class **B** Contractor's license is necessary to bid this project, but reserves the right to accept another Class at the sole discretion of either the Public Works Director or Engineer. Any work to be completed in the public right of way will require a contractor with a Class **A** contractor's license. Bidder must have at least five (5) years of experience in public projects of a similar size and scope. Bidder must have successfully completed a minimum of 2 projects of similar project scope with successful enhanced commissioning processes that meet both LEED and Cal Green standards and qualifications and clearly identify them in the Bidder's Submittal. Bidder must propose a project team with the experience listed above and maintain that team throughout the duration of the project. Core team changes are to be at the approval of the Engineer.

Pursuant to Section 1770 et seq. of the California Labor Code, the minimum prevailing rate of per diem wages for each craft, classification, or type of workman needed to execute the Contract shall be those determined by the Director of Industrial Relations of the State of California ("DIR"). These wages are set forth in the General Prevailing Wage Rates for this project, available from the California Department of Industrial Relations' Internet web site at http://www.dir.ca.gov/DLSR/PWD.

This contract is subject to compliance monitoring and enforcement by the DIR. If this project has a bid opening date of March 1, 2015 or later, any contractor and any subcontractor must register in order to submit a bid and be awarded a contract. Also refer to Special Provisions Section 7-2.6 of this document. (SB854)

By order of the City Council of the City of Torrance, California.

For further information, please contact Ted Semaan, Engineering Manager - Major Projects, AND Sepideh Sedadi, Associate Engineer, in the Public Works Department through email at TSemaan@TorranceCA.Gov and SSedadi@TorranceCA.Gov or telephone at (310) 781-6900.

SECTION B

INSTRUCTIONS TO BIDDERS

CITY OF TORRANCE, CALIFORNIA

INSTRUCTIONS TO BIDDERS

A. QUALIFICATION OF BIDDERS

1. Competency of Bidders

The successful Bidder must be able to demonstrate experience, ability, depth of resources and financial strength in the Bidders Submittal and interview process. The Bidder shall be thoroughly competent and capable of satisfactorily performing the Work covered by the Bid.

All Bidders shall clearly demonstrate their capability to successfully work within the Engineers estimate of the Project Schedule and include a project schedule

As specified in the Bid Documents, the Bidder shall furnish statements of previous experience on similar work, emphasizing successful previous work experience with projects of this complexity and nature.

Bidder shall provide written demonstration of the ability to complete the scope of work and ability to fully commit resources of the firm.

Bidder shall also furnish the plan of procedure proposed; the organization, machinery, plant and other equipment available for the Work; evidence of its financial condition and resources; and any other such documentation as may be required by the City to determine if the Bidder is responsible.

Bidder shall provide a Project Schedule. The schedule shall be in accordance with 6-1.3 and 6-1.4 and shall be in sufficient detail to show chronological relationship of all activities of the Work. These include, but are not limited to: estimated starting and completion dates of various activities, procurement of materials and scheduling of equipment.

Project Team

Bidder shall present its Organizational Chart and Project Team members, including roles and responsibilities of each member and resumes of similar work experience.

Bidder shall provide qualified site personnel to supervise and coordinate all construction work with the Engineer. Bidder to identify staff to attend in person all overall coordination meetings to occur on a minimum weekly basis or other Contractor coordination meetings required for successful completion of the scope.

Project team shall have the experience defined in the notice above including completion of projects of similar size, scope, LEED certification and with Enhanced Commissioning.

The majority of the LEED requirements apply to the construction of the buildings and final grading, plantings and flatwork. There are certain requirements that will apply to this grading and storm water system contract. A Bidder must list 2 projects that successfully documented and met each of the following required LEED Credits:

1. SSp1 Construction Activity Pollution Prevention
    a. The contractor and staffing proposed has provided documentation confirming the SWPPP plan was implemented for LEED accredited projects.
2. SSc6.1 Stormwater Design, Quantity Control
    a. The contractor and staffing proposed has completed Stormwater Design and Quality Control per City of Torrance requirements.
3. MRc2 Construction Waste Management
    a. Grading contractor and staffing proposed has tracked all non-hazardous construction and demolition waste, both landfill waste and waste diverted from the landfill (i.e. recycled) . Excavated soil and land-clearing debris do not contribute towards this credit. Contractor has tracked and via spreadsheet(similar to attached) and managed all related haul tickets to document required Construction Waste Management.

2. Contractor's License

All work of this project is subject to the jurisdiction and authority of the City of Torrance, state and local jurisdictions, but not limited to all other applicable codes. At the time of submitting the Bid, the Bidder shall be licensed as a contractor in accordance with the provisions of Chapter 9, Division 3, of the California Business and Professions Code. The required prime contractor license class for the Work is shown in the project Notice Inviting Bids. However, the City reserves the right to award the Contract to a contractor with another class if the City determines that the license is proper for the work.

3. Contractor Registration Requirements

SB 854 amended the Labor Code to require all contractors bidding on public work to register with the Department of Industrial Relations (DIR) and to pay an annual fee. The registration requires contractors to provide the State with evidence of the contractors' compliance with a number of statutory requirements. The registration requirement took effect on July 1, 2014.

4. Bidder’s Submittal and Contract Award Prohibited

Under California Labor Code section 1771.1, as amended by SB 854, unless registered with the DIR, a contractor may not bid, nor be listed as a subcontractor, for any bid proposal submitted for public work on or after March 1, 2015. Similarly, a public entity cannot award a public work contract to a non-registered contractor, effective April 1, 2015. Also refer to Section 7-2.6 of the Special Provisions.

B. BIDDER RESPONSIBILITY

A responsible Bidder is a Bidder who has demonstrated the attribute of trustworthiness, as well as ability, fitness, capacity and experience to satisfactorily perform the work.

Bidders are notified that, in accordance with Division 2, Chapter 2 of the Torrance Municipal Code, the City Council may determine whether the Bidder is responsible based on a review of the Bidder's performance on other contracts.

If, based on the provision and criteria in Division 2, Chapter 2 of the Torrance Municipal Code, the Public Works Director proposes not to recommend the award of contract to the

apparent low bidder, the Director shall notify the Bidder in writing of its intention to recommend to the City Council that the Council award the contract to the 2nd lowest responsible bidder. If the Bidder presents evidence in rebuttal to the recommendation, the Director shall evaluate the merits of such evidence, and based on that evaluation, make a recommendation to the City Council.

If awarded, Bidder may not substitute core team members including Project Executive, Project Manager, Superintendent, Primary Project Engineer or equivalent positions.

C. ADDENDA TO THE CONTRACT DOCUMENTS

The City may issue Addenda to the Contract Documents during the period of advertising for any reason. Addenda will be issued only by email and to those considered "Plan Holders". Refer to the Notice Inviting Bid for instructions on becoming a "Plan Holder". The Bidder shall acknowledge the receipt of the Addenda in their Bid. Failure of the Bidder to do so may result in the rejection of the Bid as non-responsive.

D. PREPARATION OF THE BID

1. Examination of Site, Plans and Specifications

Prior to submitting a Bid, the Bidder shall carefully examine the Bidding Documents, Plans and the Work site, carefully read the Specifications, and satisfy itself that it has the abilities and resources to complete the Work. Any errors or omissions or inconsistencies found will promptly be reported to the Engineering Manager. The Bidder agrees that if it is awarded the Contract, no claim will be made against the City based on ignorance or misunderstanding of the provisions of the Contract Documents, the nature and amount of the work, and the physical and climatic conditions of the work site.

Permission to examine the work site must be obtained in advance.

A mandatory Job walk for Bidders has been scheduled for Monday, October 19, 2015 following the mandatory pre-bid meeting commencing at 10:00 A.M. at the Torrance Public Works Department Training room located at 20500 Madrona Avenue, Torrance, CA 90503.

2. Bid Instructions and Submissions

The Bid shall be submitted on the Bidder's Submittal forms provided by the City Clerk. All Bid Documents listed below must be completed, executed and submitted with the Bid by the Bidder

Required Bidder's Submittal Documents:
1) Bidder's Submittal
2) Addenda Acknowledgment Of Addenda Received
3) Contractor's Affidavit
4) List of Subcontractors
5) References (2 pages)
6) Violations of Federal or State Law
7) Debarment and Suspension Certification
8) Bid Bond (10%)

Items 9 through 14 must be submitted with the Bidder's Submittal and may be on separate sheets in a Bidder's own format.

9) Bidder's Itemized costs for:
   i. Purchasing/Acquiring import soil per grading plan; and
   ii. Delivering import soil to job site; and
   iii. Purchase of storm drain detention system
10) Project Schedule per requirements listed in 6-1.3 and 6-1.4
11) Proposed Project Team & Organizational Chart, including responsibilities
12) Project Team's resumes with related experience as requested above
13) Company and project team's LEED experience clearly identified (2 LEED projects minimum)
14) Provide information of 5 similar projects in size and scope

All prices submitted will be considered as including any and all sales or use taxes. For any individual bid item, in the case of a discrepancy between its unit price and total bid, the unit price shall always prevail.

4. Disadvantaged Business Enterprise (DBE) Requirements

This project has no DBE requirements.

E. BID BOND

The Bid must be accompanied by either cash, a certified or cashier's check or a surety bond (bid bond) payable to the City of Torrance. Bids must be submitted on the proposal forms furnished by the City Clerk. The Bid Guaranty shall be in an amount equivalent to at least 10% of the Total Contract Bid Price.

F. NONRESPONSIVE BIDS AND BID REJECTION

1. A Bid in which any one (1) of the required Bidder's submittal documents are not completed, executed and submitted may be considered non-responsive and be rejected.

2. A Bid in which the Contract Unit Prices are unbalanced, which is incomplete or which shows alteration of form or irregularities of any kind, or which contains any additions or conditional or alternate Bids that are not called for, may be considered non-responsive and be rejected.

G. AWARD OF CONTRACT

In accordance with Division 2, Chapter 2 of the Torrance Municipal Code, the City Council reserves the right to reject any and all bids received, to take all bids under advisement for a period not-to-exceed sixty (60) days after date of opening thereof, to waive any informality or irregularity in the Bid, and to be the sole judge of the merits of material included in the respective bids received.

No less than 2 weeks prior to the anticipated City Council meeting awarding a contract as a result of the Notice Inviting Bids, the City will notify all of the vendors that submitted a bid of the intention to award.

City of Torrance Bid/RFP Protest Procedures: The City of Torrance Bid/RFP Protest Procedures may be found on the City of Torrance website: http://www.torranceca.gov/PDF/Bid_RFP_Protest_Procedures.pdf

H. EXECUTION OF CONTRACT

After the Contract is awarded, the awardee shall execute the following eight (10) documents:

1) Performance Bond (100% of Bid)
2) Labor and Material Bond (100% of Bid)
3) Contract -Public Works Agreement
4) Verification of Insurance Coverage (Certificates and Endorsements)
5) Construction or Service Contract Endorsement
6) Workers' Compensation Insurance Certificate
7) Construction Permit Application Form
8) Business License Application Form
9) Building and Safety Grading Permit
10) Permit from Los Angeles County Department of Public Works (LACDPW) for Drainage

I. APPRENTICESHIP EMPLOYMENT STANDARDS

The Contractor is directed to the provisions in Sections 1776, 1777.5 and 1777.6 of the California Labor Code concerning the employment of apprentices by the contractor or any subcontractor under them.

J. PERMITS, LICENSES AND PUBLIC WORKS AGREEMENT

The Contractor shall procure and execute all permits, licenses, pay all charges and fees, and give all notices necessary and incidental to the completion of the Work. The Contractor shall execute a Public Works Agreement. No fee is charged for a Construction-Excavation Permit issued by the City of Torrance for a public works project. The Contractor shall obtain a City of Torrance Business License. To obtain a Torrance Business License please call 310-618-5923.

K. INSURANCE

The Contractor shall maintain Automobile Liability, General Liability and Workers' Compensation Insurance as specified in the Public Works Agreement included in the Project Specifications.

L. PRE-BID INQUIRIES

A Bidder with a Pre-Bid Inquiry must submit their question(s) in writing to the Torrance Public Works Department. Any and all questions must be emailed to Ted Semaan, Engineering Manager - Major Projects, and Sepideh Sedadi, Associate Engineer, at TSemaan@TorranceCA.Gov **AND** SSedadi@TorranceCA.Gov. Please list "**TORRANCE TRANSIT PARK AND RIDE REGIONAL TERMINAL PHASE 1 – ROUGH GRADING RFI"** in the subject line of the email.

All questions must be received no later than 1:00 p.m. on the Wednesday one week prior to the date for opening the bids. Questions received after this date may not be considered. For questions of a general nature, a bidder may call Ted Semaan or Sepideh Sedadi directly at (310) 781-6900.

SECTION C

BID DOCUMENTS

BIDDER'S SUBMITTAL

Company: _____ Total Bid: _____

PROPOSAL, SPECIFICATIONS, BOND AND AFFIDAVIT FOR THE CONSTRUCTION OF

TORRANCE TRANSIT PARK AND RIDE REGIONAL TERMINAL PHASE 1 – ROUGH GRADING B2015-35

_____

Honorable Mayor and Members
of the Torrance City Council
Torrance, California

Members of the Council:

In accordance with the Notice Inviting Bids pertaining to the receiving of sealed proposals by the City Clerk of the City of Torrance for the above titled improvement, the undersigned hereby proposes to furnish all Work to be performed in accordance with the Plans, Specifications, Standard Drawings, and the Contract Documents prepared by Frank Webb Architects Inc. for the lump sum bid as set forth in the following schedules.

BID SCHEDULE

Item #	Est. Qty	Unit	Bid Item Description	SPEC. SECTION	Unit Price	Total Bid
1	1	LS	**GENERAL REQUIREMENTS**	Sec. G Div. 01	$	$
2	1	LS	**EXISTING CONDITIONS**	Sec. G Div. 02	$	$
3	1	LS	**EARTHWORK PER GRADING PLANS****	Sec. G Div. 31 SSPWC Sec.300	$	$
4	1	LS	**UTILITIES**	Sec. G Div. 33	$	$

**The City is currently pursuing an option to acquire a volume of suitable fill that may be used as imported fill for this project as shown on the grading plans. If successful, the City will address the item in an addendum. Otherwise, a Bidder is required to funish/install all imported fill per these specifications.

TOTAL BID PRICE $_____
(Figures)*****

TOTAL BID PRICE: _____
(Words)*****

_____

***<u>BID MAY BE REJECTED IF TOTAL IS NOT SHOWN IN FIGURES AND WORDS</u>.**

B2015-35

BIDDER'S SUBMITTAL (Continued) B2015-35

The undersigned has read the contract and taking no exception, furthermore agrees to enter into and execute a contract, with necessary bonds, at the unit prices set forth herein and in case of default in executing such contract, with necessary bonds, the check or bond accompanying this bid and the money payable thereon shall be forfeited thereby to and remain the property of the City of Torrance.

The above unit prices include all work appurtenant to the various items as outlined in the Specifications and all work or expense required for the satisfactory completion of said items. In case of discrepancies between unit prices and totals, the unit prices shall govern.

The undersigned declares that it has carefully examined the Plans, Specifications, and Contract Documents, and has investigated the site of the work and is familiar with the conditions thereon.

Contractor:_____

Date: _____ By:_____

Contractor's State License No. _____ Class_____

Address:_____

Phone: _____

Email: _____

Fax: _____

ACKNOWLEDGMENT OF ADDENDA RECEIVED – B2015-35

The Bidder shall acknowledge the receipt of addenda by placing an "X" by each addendum received.

Addendum No. 1 ____

Addendum No. 2 ____

Addendum No. 3 ____

Addendum No. 4 ____

Addendum No. 5 ____

Addendum No. 6 ____

Addendum No. 7 ____

Addendum No. 8 ____

If an addendum or addenda have been issued by the City and not noted above as being received by the Bidder, the Bid Proposal may be rejected.

_____ _____

Bidder's Signature Date

CONTRACTOR'S AFFIDAVIT

STATE OF CALIFORNIA }
}
COUNTY OF _____} **B2015-35**

_____, being first duly sworn, deposes and says:

1. That he is the
_____
Title

of _____
(Name of Partnership, Corporation, or Sole Proprietorship)

hereinafter called "Contractor," who has submitted to the City of Torrance a proposal for the Construction of Torrance Transit Park and Ride Regional Terminal Phase I- Rough Grading, B2015-35;

2. That said proposal is genuine; that the same is not sham; that all statement of facts therein are true;

3. That such proposal was not made in the interest or behalf of any person, partnership, company, association, organization or corporation not named or disclosed;

4. That the Contractor did not, directly or indirectly, induce, solicit or agree with anyone else to submit a false or sham bid, to refrain from bidding, or to withdraw the bid, to raise or fix the bid price of the Contractor or anyone else, or to raise or fix any overhead, profit or cost element of the Contractor's price or the price of anyone else; and did not attempt to induce action prejudicial to the interest of the City of Torrance, or of any other bidder, or anyone else interested in the proposed contract;

5. That the Contractor has not in any manner sought by collusion to secure for itself an advantage over any other bidder or to induce action prejudicial to the interests of the City of Torrance, or of any other bidder or of anyone else interested in the proposed contract;

6. That the Contractor has not accepted any bid from any subcontractor or materialman through any bid depository, the bylaws, rules or regulations of which prohibit or prevent the Contractor from considering any bid from any subcontractor or materialman, which is not processed through said bid depository, or which prevent any subcontractor or materialman from bidding to any contractor who does not use the facilities of or accept bids from or through such bid depository;

7. That the Contractor did not, directly or indirectly, submit the Contractor's bid price or any breakdown thereof, or the contents thereof, or divulge information or data relative thereto, to any corporation, partnership, company, association, organization, bid depository, or to any member or agent thereof, or to any individual or group of Individuals, except to the City of Torrance, or to any person or persons who have a partnership or other financial interest with said Contractor in its business.

Dated this _____ day of _____, 20___.

Subscribed and Sworn to
before me this _____ day
of _____, 20___.

_____
Notary Public in and for said
County and State.
(Seal)

_____
(Contractor)

_____
(Title)

LIST OF SUBCONTRACTORS: B2015-35

The Bidder is required to fill in the following blanks in accordance with the provisions of the California Public Contract Code Sections 4100-4114, CHAPTER 4. SUBLETTING AND SUBCONTRACTING. The contractor, sub recipient or subcontractor shall not discriminate on the basis of race, color, national origin, or sex in the performance of this contract. The contractor shall carry out applicable requirements of Title 49 CFR (Code of Federal Regulations) part 26 in the award and administration of US DOT assisted contracts. Failure by the contractor to carry out these requirements is a material breach of this contract, which may result in the termination of this contract or such other remedy, as the recipient deems appropriate. Each subcontract signed by the bidder must include this assurance. Failure of the bidder to fulfill the requirements of the Special Provisions for submittals required to be furnished after bid opening, including but not limited to escrowed bid documents, where applicable, may subject the bidder to a determination of the bidder's responsibility in the event it is the apparent low bidder on a future public works contracts.

Name Under Which Subcontractor is Licensed: _____

Subcontractor's Address: _____

Specific Description of Sub-Contract: _____

Subcontract Dollar Value: _____

License Number: _____ CA License Classification/Type: _____

Name Under Which Subcontractor is Licensed: _____

Subcontractor's Address: _____

Specific Description of Sub-Contract: _____

Subcontract Dollar Value: _____

License Number: _____ CA License Classification/Type: _____

Name Under Which Subcontractor is Licensed: _____

Subcontractor's Address: _____

Specific Description of Sub-Contract: _____

Subcontract Dollar Value: _____

License Number: _____ CA License Classification/Type: _____

Subcontractors listed must be properly licensed under the laws of the State of California for the type of work which they are to perform. Do not list <u>alternate</u> subcontractors for the same work.

The Bidding Contractor must include each subcontractor's contract license number (AB 44). An inadvertent error in listing the subcontractor's license number shall not be grounds for filing a bid protest, or grounds for considering the bid nonresponsive, if the corrected contractor's license number is submitted to the public entity by the prime contractor within 24 hours after the bid opening – provided that the corrected license number corresponds to the submitted name and location of the subcontractor.

REFERENCES (Page 1 of 2)
B2015-35

List work similar in magnitude and degree of difficulty completed by the Contractor within the past three (3) years. Additionally provide other information requested in instructions to bidders section above and the section below.

1. Name (Firm/Agency): _____
   Address: _____
   Contact Person: _____ Telephone No.: _____
   Title of Project: _____
   Project Location: _____
   Duration of Construction _____
   Date of Completion: _____ Contract Amount: $ _____

2. Name (Firm/Agency): _____
   Address: _____
   Contact Person: _____ Telephone No.: _____
   Title of Project: _____
   Project Location: _____
   Duration of Construction _____
   Date of Completion: _____ Contract Amount: $ _____

3. Name (Firm/Agency): _____
   Address: _____
   Contact Person: _____ Telephone No.: _____
   Title of Project: _____
   Project Location: _____
   Duration of Construction _____
   Date of Completion: _____ Contract Amount: $ _____

4. Name (Firm/Agency): _____
   Address: _____
   Contact Person: _____ Telephone No.: _____
   Title of Project: _____
   Project Location: _____
   Duration of Construction _____
   Date of Completion: _____ Contract Amount: $ _____

REFERENCES (PAGE 2 OF 2)

B2015-35

If Contractor has not performed work for the City of Torrance within the last five (5) years, list all work done within said five years (attach additional sheets if necessary). Note if work was done as subcontractor [include only subcontract amount]:

Work Description & Contract Amount	Agency and Contact Information	Date Completed

Contractor's License No.: _____ Class: _____

a. Date first obtained: _____ Expiration: _____

b. Has License ever been suspended or revoked? _____

If yes, describe when and why: _____

c. Any current claims against License or Bond? _____

If yes, describe claims: _____

Principals in Company (List all – attach additional sheets if necessary):

NAME	TITLE (If Applicable)	LICENSE NO.
_____	_____	_____
_____	_____	_____
_____	_____	_____

VIOLATIONS OF FEDERAL, STATE OR LOCAL LAWS
B2015-35

Contractor:_____

1. Has your firm or its officers been assessed any penalties by an agency for noncompliance or violations of Federal, State or Local labor laws and/or business or licensing regulations within the past five (5) years relating to your construction projects?

   Yes/No: _____ Federal/State:_____

   If "yes," identify and describe, (including agency and status): _____

   _____

   _____

   _____

   Have the penalties been paid? Yes/No: _____

2. Does your firm or its officers have any ongoing investigations by any public agency regarding violations of the State Labor Code, California Business and Professions Code or State Licensing Laws?

   Yes/No: _____ Code/Laws: _____ Section/Article: _____

   If "yes," identify and describe, (including agency and status): _____

   _____

   _____

   _____

DISQUALIFICATION OR DEBARMENT

Contractor:_____

Has your firm, any officer of your firm, or any employee who has a proprietary interest in your firm ever been disqualified, removed, or otherwise prevented from bidding on, performing work on, or completing a federal, state or local project because of a violation of law or a safety regulation? Yes/No: _____. If yes, provide the following information (if more than once, use separate sheets):

Date: _____ Entity: _____

Location: _____

Reason: _____

_____

_____

_____

_____

Provide Status and any Supplemental Statement: _____

_____

_____

_____

_____

Has your firm been reinstated by this entity? Yes/No: _____

BID BOND (10%)
B2015-35

KNOW ALL MEN BY THESE PRESENTS: That we, _____

_____

as principal, and _____

as sureties, are held and firmly bound unto the City of Torrance, State of California, in the penal sum of _____ dollars ($_____), for the payment whereof we hereby bind ourselves, our successors, heirs, executors or administrators jointly and severally, firmly by these presents.

The condition of this obligation is such that, whereas the above bounded principal is about to file with and submit to the City of Torrance a bid or proposal for the performance of certain work as required in the City of Torrance, Project No. B2015-35, said work being: the Torrance Transit Park and Ride Regional Terminal Phase I- Rough Grading, B2015-35; and in compliance with the Specifications therefor under an invitation of said City contained in a notice or advertisement for bids or proposals; now if the bid or proposal of the said principal shall be accepted and if the said work be thereupon awarded to the principal by said City and if the said principal shall enter into a contract with the said City in accordance with said bid or proposal, or if the bid or proposal of the said principal is rejected, then this bond shall be void and of no effect and otherwise in full force and effect.

WITNESS our hands this _____ day of _____, 20___.

_____
Principal

_____
Surety/Attorney-in-Fact

_____
Signature

Name: _____
Local Address: _____
_____
Phone No.: _____
Fax No.: _____

SECTION D

DOCUMENTS TO BE COMPLETED AND DELIVERED TO CITY AFTER AWARD OF CONTRACT BY THE CITY COUNCIL

PERFORMANCE BOND

KNOW ALL MEN BY THESE PRESENTS:

That we, _____as Principal(s) and _____a corporation, incorporated, organized, and existing under the laws of the State of _____, and authorized to execute bonds and undertakings and to do a general surety business in the State of California, as Surety, are jointly and severally held and firmly bound unto the City of Torrance, a municipal corporation, located in the County of Los Angeles, State of California, in the full and just sum of: _____ Dollars ($_____), lawful money of the United States of America, for the payment of which sum, well and truly to be made, we bind ourselves and our respective heirs, executors, administrators, representative, successors and assigns, jointly and severally, firmly by these presents.

THE CONDITION OF THIS OBLIGATION IS SUCH, that: **WHEREAS,** said Principal(s) have/has entered into, or are/is about to enter into, a certain written contract or agreement, dated as of the _____ day of _____, 20____, with the said City of Torrance for the Construction of Torrance Transit park and Ride Regional Terminal Phase 1- Rough Grading, B2015-35, all as is more specifically set forth in said contract or agreement, a full, true and correct copy of which is hereunto attached, and hereby referred to and by this reference incorporated herein and made a part hereof;

NOW, THEREFORE, if the said Principal(s) shall faithfully and well and truly do, perform and complete, or cause to be done, performed and complete, each and all of the covenants, terms, conditions, requirements, obligations, acts and things, to be met, done or performed by said Principal(s), including any guarantee period as set forth in, or required by, said contract or agreement, all at and within the time or times, and in the manner as therein specified and contemplated, then this bond and obligation shall be null and void; otherwise it shall be and remain in full force, virtue and effect.

The said Surety, for value received, hereby stipulates and agrees that no amendment, change, extension of time, alteration or addition to said contract or agreement, or of any feature or item or items of performance required therein or thereunder, shall in any manner affect its obligations on or under this bond; and said Surety does hereby waive notice of any such amendment, change, extension of time, alteration, or addition to said contract or agreement, and of any feature or item or items of performance required therein or thereunder.

PERFORMANCE BOND (CONTINUED)

In the event any suit, action or proceedings is instituted to recover on this bond or obligation, said Surety will pay, and does hereby agree to pay, as attorney's fees for said City, such sum as the Court in any such suit, action or proceeding may adjudge reasonable.

EXECUTED, SEALED AND DATED this _____ day of _____, 201___.

CORPORATE SEAL

PRINCIPAL(S):

BY _____

BY _____

CORPORATE SEAL

SURETY:

BY _____

LABOR AND MATERIAL BOND

KNOW ALL MEN BY THESE PRESENTS:

That we,_____
As Principal(s) and _____ a corporation, incorporated, organized, and existing under the laws of the State of _____, and authorized to execute bonds and undertakings and to do a general surety business in the State of California, as Surety, are jointly and severally held and firmly bound unto:

(a) The State of California for the use and benefit of the State Treasurer, as ex-officio Treasurer and custodian of the Unemployment Fund of said State; and

(b) The City of Torrance, California; and

(c) Any and all persons who do or perform or who did or performed work or labor upon or in connection with the work or improvement referred to in the contract or agreement hereinafter mentioned; and

(d) Any and all materialmen, persons, companies, firms, association, or corporations, supplying or furnishing any materials, provisions, provender, transportation, appliances or power, or other supplies used in, upon, for or about or in connection with the performance of the work or improvement contracted to be executed, done, made or performed under said contract or agreement; and

(e) Any and all persons, companies, firms, associations, or corporations furnishing, renting, or hiring teams, equipment, implements or machinery for, in connection with, or contributing to, said work to be done or improvement to be made under said contract or agreement; and

(f) Any and all persons, companies, firms, associations, or corporations who supply both work and materials;

and whose claim has not been paid by said Principal(s), in full and just sum of _____ Dollars ($_____), lawful money of the United States of America, for the payment of which will and truly to be made, said Principal(s) and said Surety do hereby bind themselves and their respective heirs, executors, administrators, representatives, successors and assigns, jointly and severally, firmly by these presents.

LABOR AND MATERIAL BOND (CONTINUED)

THE CONDITION OF THE FOREGOING OBLIGATION IS SUCH, THAT: WHEREAS, said Principal(s) have/has entered into or are/is about to enter into a certain written contract or agreement, dated as of the _____ day of _____20 ___, with the City of Torrance for the Construction of Torrance Transit Park and Ride Regional Terminal Phase 1-Rough Grading, B2015-35, all as is more specifically set forth in said contract or agreement, a full, true and correct copy of which is hereunto attached, and hereby referred to and by this reference incorporated herein and made a part hereof;

NOW, THEREFORE, if the said Principal(s) (or any of his/her, its, or their subcontractors) under said contract or agreement fails or fail to pay:

(1) For any materials, provisions, provender, transportation, appliances, or power, or other supplies; or

(2) For the hire of any teams, equipment, implements, or machinery; or

(3) For any work or labor; supplies, furnished, provided, used, done or performed in, upon, for or about or in connection with the said work or improvement; or

(4) For amounts due under the Unemployment Insurance Act of the State of California with respect to such work or improvement;

the Surety on this bond will pay the same in an amount not exceeding the sum hereinabove specified in this bond; and, also, in case suit is brought upon this bond, said Surety will (and does hereby agree to) pay a reasonable attorney's fee, to be fixed and taxed as costs, and included in the judgment therein rendered.

This bond shall (and it is hereby made to) insure to the benefit of any and all persons entitled to file claims under Section 1192.1 of the Code of Civil Procedure of the State of California, so as to give a right of action to them or their assigns in any suit brought upon this bond, all as contemplated under the provisions of Section 4205 of the Government Code, and of Chapter 1 of Title 4 of Part 3 of the Code of Civil Procedure, of the State of California.

This bond is executed and filed in connection with said contract or agreement hereunto attached to comply with each and all of the provisions of the laws of the State of California above mentioned or referred to, and of all amendments thereto, and the obligors so intend and do hereby bind themselves accordingly.

LABOR AND MATERIAL BOND (CONTINUED)

The said Surety, for value received, hereby stipulates and agrees that no amendment, change, extension of time, alteration, or addition to said contract or agreement, or of any feature or item or items of performance required therein or thereunder, shall in any manner affect its obligations on or under this bond; and said Surety does hereby waive notice of any such amendment, change, extension of time, alteration, or addition to said contract or agreement, and of any feature or item or items of performance required therein or thereunder.

EXECUTED, SEALED AND DATED this _____ day of _____, 20 _____

CORPORATE SEAL

PRINCIPAL:

BY _____

CORPORATE SEAL

SURETY:

BY _____

PUBLIC WORKS AGREEMENT

BIDDERS ARE TO REFER TO APPENDIX I FOR THE PRO FORMA PUBLIC WORKS AGREEMENT TO BE EXECUTED, UPON APPROVAL OF THE CITY COUNCIL, WITH THE CONFIRMED LOWEST, RESPONSIBLE BIDDER.

CITY OF TORRANCE

CONSTRUCTION OR SERVICE CONTRACT ENDORSEMENT

To be attached to and made a part of all policies insuring the liability of any person, form or corporation performing services under contract for the City of Torrance.

Notwithstanding any inconsistent expression in the policy to which this endorsement is attached, or in any other endorsement now or hereafter attached thereto, or made a part thereof, the protection afforded by said policy shall:

1. Include the City of Torrance as an additional insured. (To include the elected officials, appointed officials, and employees.)

2. Indemnify and save harmless the City of Torrance against any and all claims resulting from the undertaking specified in the contract known as:

PROPOSAL, SPECIFICATIONS, BOND AND AFFIDAVIT
FOR THE CONSTRUCTION OF

Torrance Transit Park and Ride Regional Terminal Phase 1- Rough Grading,

B2015-35,

This hold harmless assumption on the part of the underwriters shall include all costs of investigation and defense, including claims based on damage to substructures not shown, not located on the plans, or shown incorrectly.

3. Not be cancelled except by notice to the City Attorney of the City of Torrance at least thirty (30) days prior to the date of cancellation.

4. Provide single limit for Bodily Injury Liability and Property Damage Liability combined, $1,000,000 each Occurrence, and $1,000,000 Aggregate.

5. Limited classifications, restricting endorsements, exclusions or other special provisions contained in the policy shall not act to limit the benefits of coverage as they shall apply to the City of Torrance as enumerated in this endorsement. However, nothing herein contained shall affect any rights of the insurer against the insured.

6. It is further expressly agreed by and between the parties hereto that the following two provisions, (a) and (b), are a part of this contract:

   (a) That the Contractor specifically agrees to comply with applicable provisions of Section 1777.5 of the Labor Code relating to the employment by contractor or subcontractor under it, of journeyman or apprentices, or workmen, in any apprenticeable craft or trade.

   (b) By my signature hereunder, as Contractor, I certify that I am aware of the provisions of Section 3700 of the Labor Code which requires every employer to be insured against liability for Workers' Compensation or to undertake self-insurance in accordance with the provisions of that code, and I will comply with such provisions before commencing the performance of the work of this contract.

The limits of liability as stated in this endorsement apply to the insurance afforded by this endorsement notwithstanding that the policy may have lower limits of liability applying elsewhere in the policy.

_____
Duly Authorized Agent

Attached to and forming part of
Policy No. _____
of the _____

Date: _____
Expiration Date:_____

WORKERS' COMPENSATION INSURANCE CERTIFICATION

In compliance with Section 7-4 of the Standard Specifications, the Contractor shall complete and submit the following certification with a Certificate of Insurance before execution of the contract.

I am aware of, and will comply with, Section 3700 of the Labor Code, requiring every employer to be insured against liability for Workers' Compensation or to undertake self-insurance before commencing any of the work.

_____
CONTRACTOR

By: _____

Title:_____

SECTION E

SPECIAL PROVISIONS

The following Special Provisions references to the Project Plans and Construction Specifications Institute (CSI) specifications supplement and amend the Standard Specifications for Public Works Construction (2012 edition) and the Standard Specifications of the State of California Department of Transportation (Caltrans), latest edition, as noted herein. These Special Provisions have been arranged into a format that parallels the Standard Specifications for Public Works Construction.

SECTION E - SPECIAL PROVISIONS

Table of Contents

Page

PART 1 - GENERAL PROVISIONS

SECTION 1 -TERMS, DEFINITIONS, ABBREVIATIONS, UNITS OF MEASURE AND SYMBOLS **3**
1-2 TERMS AND DEFINITIONS

SECTION 2 - SCOPE AND CONTROL OF THE WORK **3**
2-1 AWARD AND EXECUTION OF CONTRACT
2-4 CONTRACT BONDS
2-5 PLANS AND SPECIFICATIONS
2-6 WORK TO BE DONE
2-9 SURVEYING
2-10 AUTHORITY OF THE BOARD AND THE ENGINEER
2-11 INSPECTION

SECTION 3 - CHANGES IN WORK **11**
3-3 EXTRA WORK
3-4 CHANGED CONDITIONS

SECTION 4 – CONTROL OF MATERIALS **13**
4-1 MATERIALS AND WORKMANSHIP

SECTION 5 - UTILITIES **13**
5-1 LOCATION
5-2 PROTECTION
5-3 REMOVAL
5-4 RELOCATION
5-5 DELAYS

SECTION 6 - PROSECUTION, PROGRESS & ACCEPTANCE OF THE WORK **17**
6-1 CONSTRUCTION SCHEDULE AND COMMENCEMENT OF WORK
6-7 TIME OF COMPLETION
6-8 COMPLETION, ACCEPTANCE AND WARRANTY
6-9 LIQUIDATED DAMAGES
6-11 SEQUENCE OF CONSTRUCTION

SECTION 7 - RESPONSIBILITIES OF THE CONTRACTOR **20**
7-2 LABOR
7-3 INSURANCE
7-4 *NOT USED*
7-5 PERMITS
7-6 THE CONTRACTOR'S REPRESENTATIVE
7-8 WORK SITE MAINTENANCE

7-15 PROJECT CONSTRUCTION SIGNS AND PORTABLE CHANGEABLE MESSAGE SIGNS

SECTION 8 - UNUSED

SECTION 9 - MEASUREMENT AND PAYMENT **26**
9-1 MEASUREMENT OF QUANTITIES FOR UNIT PRICE WORK
9-2 LUMP SUM WORK
9-3 PAYMENT
9-4 CLAIMS

PART 2 - CONSTRUCTION MATERIALS

PART 3 - CONSTRUCTION METHODS

SECTION 300 - EARTHWORK **29**
300-1 CLEARING AND GRUBBING
300-2 UNCLASSIFIED EXCAVATION
300-10 GEOTEXTILES FOR SEPARATION

SECTION 306 - UNDERGROUND CONDUIT CONSTRUCTION **33**
306-1 OPEN TRENCH OPERATIONS
306-5 ABANDONMENT OF CONDUITS AND STRUCTURES

PART 1 - GENERAL PROVISIONS

SECTION 1 - TERMS, DEFINITIONS, ABBREVIATIONS, UNITS OF MEASURE, AND SYMBOLS

1-2 TERMS AND DEFINITIONS. Add the following:

Agency – The City of Torrance herein referred to as CITY.

Board – The City Council of the City of Torrance herein referred to as City Council.

Engineer –The Public Works Director and/or City Engineer of the City of Torrance, acting either directly or through properly authorized agents, such agents acting within the scope of the particular duties entrusted to them.

Claim - A separate demand by the Contractor for (A) a time extension, (B) payment of money or damages arising from work done by or on behalf of the Contractor pursuant to the Contract and payment of which is not otherwise expressly provided for or the claimant is not otherwise entitled to, or (C) an amount the payment of which is disputed by the Agency.

Consulting Architect- Greg Coles AIA
Frank Webb Architects Inc.
8607 Venice Blvd
Los Angeles, Ca 90034
310-559-4717
gcoles@teamfwa.com

Geotechnical Engineer - The designated geotechnical firm authorized by the City of Torrance.

SECTION 2 - SCOPE AND CONTROL OF THE WORK

The work to be done consists of furnishing all labor, materials, tools, equipment and incidentals to complete the Torrance Transit Park and Ride Regional Terminal Phase 1 - Rough Grading and Storm Drain Construction as shown in the plans and specifications prepared by Frank Webb Architects Inc. for the City of Torrance. The project specifications for all work on this project are the specifications contained in the "**Torrance Transit Park and Ride Regional Terminal Phase I-Rough Grading**" of Section G prepared by Frank Webb Architects Inc. and the city of Torrance.

2-1 AWARD AND EXECUTION OF CONTRACT. Replace the entire subsection with the following:

Within ten (10) working days after the date of the CITY'S award of contract, the Contractor shall execute and return all Contract Documents required by the CITY. The CITY reserves the right to terminate the award if the above requirement is not met. Such termination will result in the forfeiture of the Proposal Guaranty.

The Contract shall not be considered binding upon the CITY until executed by the authorized CITY officials.

2-4 CONTRACT BONDS. Revise the second sentence of the fourth paragraph to read as follows:

The "Performance Bond" shall remain in effect for one year following the date specified in the Notice of Completion or, if no Notice of Completion is recorded, for one year following the date of final acceptance by the Engineer.

2-5. PLANS AND SPECIFICATIONS.

2-5.1 General. Add the following sentence to the first paragraph to read as follows:

The Contractor shall maintain a control set of Plans and Specifications on the Work site at all times. All final locations determined in the field, and any deviations from the Plans and Specifications, shall be marked in red on this control set to show as-built conditions. Additionally contract is to provide updated digital files of As-Built conditions as defined within the project CSI Specifications. Upon completion of the Work, the Contractor shall submit the control set to the Engineer for approval. Final payment will not be made until this requirement is met.

Any reference made in the Contract Documents to any specification, standard, or publication of any organization shall, in the absence of a specific designation to the contrary, be understood to refer to the latest edition of the specification, standard, or publication in effect as of the date of advertising the work, except to the extent that said standard or publication may be in conflict with applicable laws, ordinances, or governing codes.

The Construction Specifications Institute (CSI) formatted specifications are included to supplement the Greenbook format specifications provided in Section E. Should conflicts occur between the provisions in the Greenbook specifications and these CSI specifications, the provisions of the CSI specifications should supersede on-site work (see Special Provisions Page 28) except where special provisions of this document provide modifications or amendments to the Greenbook. Contractors should be aware of all new code requirements (such as Cal-Green) when dealing with HVAC and other general building work. No requirements of these specifications or the drawings shall be waived because of any provisions of, or omission from, said standards or publications.

Add the following subsections:

2-5.1.1 Plans. Included as part of the Contract Documents are the following, which show the location, character, dimensions or details of the Work:

1) Project Plans

   The Project plans provided with the Contract Documents are based on existing plans and documents. The plans and data are provided for information only. The Owner does not guarantee their accuracy and correctness. If the Bidder in preparing the Bid Proposal uses this information, the Bidder assumes all risks resulting from conditions differing from the information shown. The Bidder, in consideration for the information being provided, hereby releases the Owner and Consulting Engineer from any responsibility of obligation as to the accuracy of such information or for any additional compensation for work performed due to assumptions based on the use of such information.

2) Standard Plans as defined in the project plans and specifications.

   a. City of Torrance Standard Plans, latest edition

   b. Standard Plans for Public Works Construction, latest edition, promulgated by Public Works Standards, Inc.

   c. Standard Plans of the State of California Department of Transportation (Caltrans), latest edition

   d. Standard Plans of the Los Angeles County Department of Public Works, latest edition

Applicable Standard Plans and information for this project are included in the project contract documents including specifications and drawings.

2-5.1.2 Specifications. The Specifications and Drawings are complementary, and what is called for in one shall be as binding as if called for in both. This document is intended to be complimentary to the project drawings and specifications. Any discrepancy between documentation is to be submitted as a request for clarification to the project engineer for direction.

The Work shall be performed or executed in accordance with these Special Provisions and the following:

1) Standard Specifications for Public Works Construction, latest edition and supplements thereto, hereinafter referred to as the Standard Specifications, as written and promulgated by Public Works Standards, Inc. The Standard Specifications are published by BNi Building News, Inc., 1612 South Clementine Street, Anaheim, CA 92802, Phone: (800) 873-6397.

2) See contract documents for any specific required standard specifications. Standard plans also provided in Appendix II and III for reference.

Applicable Standard Specifications and information for this project are included in the project contract documents including specifications and drawings. Standard plans also provided in Appendix II and III for reference.

2-5.2 Precedence of Contract Documents. Replace the entire subsection with the following:

If there is a conflict between any of the Contract Documents, the document highest in precedence shall control. The order of precedence shall be as follows:

1) Change Orders (including Plans and Specifications attached thereto).
2) Permits issued by other agencies.
3) Public Works Agreement
4) Addenda
5) Special and General Provisions
6) Geotechnical Report
7) Plans & CSI Specifications

8) City Standard Plans
9) Other Standard Plans
10) Standard Specifications for Public Works Construction
11) Reference Specifications

With reference to the Plans/Drawings, the order of precedence is as follows:

1) Change Order plans govern over Addenda and Contract plans
2) Addenda plans govern over Contract plans
3) Contract plans govern over standard plans
4) Detail plans govern over general plans
5) Figures govern over scaled dimensions

Within the Specifications, the order of precedence is as follows:

1) Change Orders
2) Permits from other agencies/Supplemental Agreements
3) Special Provisions
4) Instruction to Bidders
5) Referenced Standard Plans
6) Referenced Standard Specifications

If the Contractor, in the course of the Work, becomes aware of any claimed errors or omissions in the Contract Documents or in the CITY's fieldwork, the Contractor shall immediately inform the Engineer. The Engineer shall promptly review the matter, and if the Engineer finds an error or omission has been made the Engineer shall determine the corrective actions and advise the Contractor accordingly. If the corrective work associated with an error or omission increases or decreases the amount of work called for in the Contract, the CITY shall issue an appropriate Change Order in accordance with 3-3. After discovery of an error or omission by the Contractor, any related work performed by the Contractor shall be done at the Contractor's risk unless authorized by the Engineer.

If discrepancies are discovered between the drawings and the specifications, and no specific interpretation is issued prior to bidding, the decision regarding this interpretation shall rest with the Engineer. The Contractor shall be compelled to act on the Engineer’s decision as directed. In the event the work is not in compliance with the direction of the Engineer, the installation shall be corrected by and at the expense of the Contractor at no additional cost to the City.

2-5.3 Submittals

See CSI Specification section 01 3323 for specific requirements related to shop drawings, product data and samples. All specific submittal requirements are listed in the project drawings and specification.

2-5.3.2 Working Drawings. Add the following:

The contractor is to refer to the project plans and specifications for all shop drawings and working drawing that are required.

Revise the fourth paragraph of the Standard Specifications to read as follows:

Shop drawings shall be prepared, wet stamped, and signed by a licensed Engineer registered by the State of California as required by the project specification.

2-5.3.4 Supporting Information. Replace the second paragraph with the following:

The contractor is to refer to the project plans and specifications for all submittals, preconstruction meetings, mock ups and certifications that are required.

1) Construction schedule per 6-1.
2) Storm Drain Piping
3) Pre-cast Concrete catch basins and metal grates
4) Pre-cast concrete detention basin modules
5) BMP manhole
6) Weir manhole
7) Metal storm drain manhole covers
8) Metal storm drain cleanout covers

In addition to the above, submittals may be required for any product, manufactured item, or system not specifically listed above.

2-6 WORK TO BE DONE.

2-6.1 Summary of Work

Refer to Section G CSI Specification Section 01 1100 Summary of Work of project specification for description of scope of work.

2-9 SURVEYING.

2-9.1 Permanent Survey Markers. Replace the entire Subsection 2-9.1 with the following:

The Contractor shall not disturb survey monuments, lot stakes (tagged), centerline ties, or benchmarks without notifying the Engineer. The Contractor shall be responsible to have a CA Registered Land Surveyor document all surveying monuments, lot stakes (tagged), centerline ties, and bench marks that may be disturbed during construction. In the event that identification numbers on survey monuments are illegible, it shall be the responsibility of the Contractor to obtain all information necessary to restore the monuments in their correct location. The Contractor or its Surveyor shall file a Corner Record Form at the Los Angeles County Surveyor referencing survey monuments subject to disturbance prior to the start of construction and also prior to the completion of construction, including a location for reestablishment of disturbed monuments. Copies of the records shall be provided to the City. **Final payment will not be made until the aforementioned documentation is provided to the CITY.**

All surveying shall be performed by a CA Registered Licensed Land Surveyor or a Registered Civil Engineer authorized to practice land surveying within the state. All monuments and centerline ties shall be tied out and reset in accordance with Section 8771 (Land Surveyors Act) of the Business and Professions Code of the State of California.

All costs for the above surveying requirements shall be considered as included in the prices bid for the various items of work shall include full compensation for furnishing all labor, materials, equipment, tools and incidentals for doing all the work involved in preserving and/or constructing of the survey monuments, complete in place, and no additional compensation shall be made.

2-9.2 **Survey Service.** Replace the first two paragraphs with the following:

All construction surveying necessary to complete the Work shown on the Plans and provided in these Contract Documents shall be accomplished by or under the direction of a Registered Land Surveyor or Registered Civil Engineer authorized to practice land surveying in the State of California, retained and/or provided by the Contractor. The CITY reserves the right to direct additional construction survey work to be performed at no additional cost when the City determines it is required to adequately construct the Work.

The Contractor shall notify the Engineer in writing at least 2 working days prior to the actual survey. The Contractor shall provide any required traffic control necessary for construction surveying. Prior to disturbing survey monuments, the Contractor shall notify the Engineer in accordance with Section 2-9.1.

Stakes shall be set and stationed by the Contractor for storm drains, catch basins, rough grade, and other items as necessary. A corresponding cut or fill to finished grade (or flow line) shall be indicated on a grade sheet. A copy of each grade sheet shall be furnished to the Engineer. If any construction survey stakes are lost or disturbed and need to be replaced, such replacement shall be by the Contractor at its expense.

Construction stakes shall consist of the following:

a. Offset line and grade stakes for storm drains at 50-foot max. intervals with grade sheets indicating cut to the pipe invert.

b. One set of control stakes for manholes and clean outs.

c. Pipe heading checks for line and grade at each manhole and cleanout.

d. Line and grade of existing features shown on the plan to be replaced in kind sufficient for their construction

The Contractor shall submit to the City within 2 days after completion of each respective survey, setting of each stake and heading check a copy of the survey notes and calculations certified by the licensed Land Surveyor for the following:

a. Level and horizontal control circuit for survey control.

b. Grade sheets for pipeline stakes.

c. Pipe heading checks.

Add the following subsection:

2-9.5 Payment

Payment for CONSTRUCTION SURVEYING shall be considered as included in the prices bid for the various items of work. All costs for construction surveying including, but not limited to, construction staking, professional services, office calculations, furnishing all labor, materials, equipment, tools and incidentals, and for doing all work involved shall be considered as included.

2-10 AUTHORITY OF THE BOARD AND THE ENGINEER. Add the following:

Failure of the Contractor to comply with the requirements of the Contract Documents, or to follow the directions of the Engineer, and/or to immediately remedy such noncompliance or to follow directions, may, upon notice from the Engineer, result in the suspension of the Contract monthly progress payments. Any monthly progress payments so suspended may remain in suspension until the Contractor is in compliance with the Contract Documents and the directions of the Engineer, as determined by the Engineer.

2-11 INSPECTION. Replace the entire subsection with the following:

The Work is subject to inspection and approval by the Engineer. The Contractor shall notify the Engineer a minimum of 48 hours in advance of the required inspection.

The Engineer will make, or have made, such inspections and tests as he deems necessary to see that the Work is in conformance with the Contract Documents. In the event such inspections or tests reveal noncompliance with the Contract Documents, the Contractor shall bear the cost of such corrective measures as deemed necessary by the Engineer, as well as the cost of subsequent re-inspection and re-testing.

Work done in the absence of inspection by the Engineer may be required to be removed and replaced under the inspection of the Engineer, and the entire cost of removal and replacement, including the cost of all materials which may be furnished by the CITY and used in the work thus removed, shall be borne by the Contractor, regardless of whether the work removed is found to be defective or not. Work covered without the approval of the Engineer shall, if so directed by the Engineer, be uncovered to the extent required by the Engineer, and the Contractor shall similarly bear the entire cost of performing alll the work and furnishing all the materials necessary for the removal of the covering and its subsequent replacement, including all costs for additional inspection.

The Engineer and any authorized representatives shall at all times have access to the Work during its construction at shops and yards as well as the Work site. The Contractor shall provide every reasonable facility for ascertaining that the materials and workmanship are in accordance with the Contract Documents.

Additional requirements with regards to testing and inspection see Section G CSI Specification section 01 4200.

Inspection of the Work shall not relieve the Contractor of the obligation to fulfill all conditions of the Contract.

Add the following subsections:

2-11.1 Special Inspection Fees. If the Contractor elects to work under this Contract more than 8 hours/day or more than 40 hours/week, Saturday, Sunday, or CITY holidays, the Contractor shall arrange with the Engineer for the required inspection service and pay the Special Inspection Fees which will be charged at the following rates:

Mondays through Fridays	-	$135.00 per hour
Saturdays, Sundays, Holidays	-	$1,200.00 per day

Fees may be deducted from payments due to the Contractor at the discretion of the Engineer.

If the Contractor works under this contract at times other than within the allowed working hours without permission from or prior arrangement with the Engineer, the Contractor will be charged a lump sum amount of $500.00 for each occurrence, in addition to the above fees. The amount will be deducted from a Progress Payment.

2-11.3 Inspections During Rough Grading. During the grading, the Contractor shall make the Work site available for periodic inspections by the regulatory agencies.

2-11.4 Material Inspection/Testing and other City Expenses.

(a) If a City subcontractor hired to perform material inspection and/or testing is required to work additional time to perform inspection and testing as a result of an action or delay caused by the Contractor, except for specific work allowed by the Engineer, the City subcontractor may charge the City an additional fee. The Engineer may deduct the additional fee for said inspection and testing from a Progress Payment to the Contractor. The Engineer also may deduct the cost to perform additional testing when an initial test fails to meet the requirements of this Contract. The typical rates for material testing and inspection are available upon request from the Public Works Department.

(b) If the Contractor does not comply with a requirement of these Special Provisions or if it does not immediately respond, after being informed, to a request by the Engineer to amend a site condition that jeopardizes the public health, safety or welfare, the Engineer may direct City staff to perform the work. For each occurrence, the City will charge the Contractor a base charge in the amount of $750 in addition to all costs incurred by the City for administration, labor, equipment and materials. The standard rates for City staff are available upon request from the Public Works Department.

(c) For each sign, drum, delineator, cone, barricade, warning device, or other type of required traffic control device that is not provided and/or replaced by the Contractor when required by the Traffic Control Plans and/or directed by the Engineer, the Engineer may deduct $75 per day for each missing device from a Progress Payment.

(d) Temporary lane closures maintained prior to 8:30 A.M. and/or after 3:30 P.M. may have a negative economic effect on the local residential, commercial or industrial community. Unless a temporary lane closure is otherwise authorized, the Engineer may deduct a fee from a Progress Payment for each temporary lane closure maintained prior to 8:30 A.M. or after 3:30 P.M. The fee will be assessed at a rate of $700 per each travel lane per each thirty (30) minute interval, or fraction thereof.

(e) Excavations, foundations & retaining walls inspections and testing are required and will be accommodated by the contractor as defined in Section G CSI Specification section 01 4200.

SECTION 3 – CHANGES IN WORK

3-2 CHANGES INITIATED BY THE AGENCY

Section 3-2.2.1 General. Delete this subsection in its entirety. Add the following:

The City reserves the right to increase or decrease any bid item quantity, as necessary, to meet the City's needs and/or the project and/or budget requirements. If the City increases or decreases any bid item quantity by more than 25% of the original contract quantity, either the City or the Contractor may initiate discussions and/or negotiations regarding a potential adjustment to the contract unit bid price.

3-3 EXTRA WORK

3-3.1 General. Add the following:

Payment for additional work and all expenditures in excess of the Contract Price must be authorized in writing by the Engineer. Such authorization shall be obtained by the Contractor prior to engaging in additional work. It shall be the Contractor's sole responsibility to obtain written approval from the Engineer for any change(s) in material or in the work proposed by suppliers or subcontractors. No payment shall be made to the Contractor for additional work which has not been approved in writing, and the Contractor hereby agrees that it shall have no right to additional compensation for any work not so authorized.

The Contractor shall be responsible to provide all data and to obtain all approvals required by the Specifications, including submittal of Daily Extra Work Reports. No claims or extras shall be approved by the Engineer unless all work was done under the direction of and subject to the approval of the Engineer. Disputed work claims shall comply with 3-3 as modified herein.

Substitutions for components of the defined scope are to be in compliance with Section G CSI Specification section 01 2513.

3-3.2.2 Basis for Establishing Costs.

3-3.2.2.3 Tool and Equipment Rental. Replace the second paragraph of with the following:

The Contractor will be paid for the use of equipment at the lower of the actual rental rates paid by the Contractor or the rental rates listed for such equipment in either the "Rental Rate Blue Book" published by Dataquest, Inc., 1290 Ridder Park Drive, San Jose, California 95131; telephone (408) 971-9000 or the California Department of Transportation publication entitled "Labor Surcharge and Equipment Rates" available at the Caltrans web site, www.dot.ca.gov/hq/eqsc/inforesources.htm , which is in effect on the date upon which the work is accomplished, and that hereby is made a part of the Contract, regardless of ownership or any rental or other agreement, if such may exist, for the use of such equipment entered into by the Contractor. If it is deemed necessary by the Engineer to use equipment not listed in the said publication, a suitable rental rate will be established by the Engineer. The Contractor may furnish any cost data that might assist the Engineer in the establishment of such rental rate.

3-3.2.3 Markup. Add the following:

The markups mentioned hereinafter shall include, but are not limited to, all costs for the services of superintendents, project managers, timekeepers and other personnel not working directly on the change order, and pickup or yard trucks used by the above personnel. These costs shall not be reported as labor or equipment elsewhere except when actually performing work directly on the change order and then shall only be reported at the labor classification of the work performed.

3-3.2.3.1 Work by Contractor. Replace the entire subsection with the following:

The amount of profit and overhead charged by subcontractors shall be limited as follows:

For the Subcontractor performing the actual work that is the subject of the Change Order, such that the Subcontractor will not charge the Owner more than 10% for combined overhead and profit above the cost of such Change Order.

Any Subcontractor, holding the contract of a lower tier Subcontractor, may only charge a 5% markup on such lower tier Subcontractor's Change Order work.

Notwithstanding the forgoing, Contractor may only markup Change Order work of any of its Subcontractor's by a maximum of 5%

The following modification of 10% shall be a maximum addition to the Contractor's actual and direct costs and shall constitute the mark-up for all overhead and profit, which shall be deemed to include all items of expense not specifically designated as cost or equipment rental in Subsections 3-3.2.2. Direct and actual costs will not include Subcontractor costs as limitations to mark up for overhead and profit shall be limited as defined above.

To the sum of the costs and markups provided for in this subsection, one (1) percent shall be added as compensation for bonding.

3-3.2.3.2 Work by Subcontractor. Replace the entire subsection with the following:

When any part of the extra work is performed by a subcontractor, the markup established in 3-3.2.3.1 shall be applied to the subcontractor's actual cost of such work. A markup of ten (10) percent on the first $5,000 of the subcontracted portion of the extra work and a mark-up of 5 percent on work added in excess of $5,000 of the subcontracted portion of the extra work may be added by the Contractor.

The markups specified in the two subsections above shall be considered as including, but not limited to, the Contractor's labor costs for personnel not working directly on the extra work, including the cost of any tools and equipment that they may use. Such costs shall not be reported as labor or equipment costs elsewhere except when they are actually used in the performance of the extra work. Labor costs shall in that case be reported for the labor classification corresponding to the type and nature of extra work performed.

3-4 CHANGED CONDITIONS.

Add the following:
Changed Conditions. The plans for the work show conditions as they are believed by the Engineer to exist, but it is not intended or to be inferred that the conditions as shown thereon

constitute a representation by the City that such conditions are actually existent, nor shall the City be liable for any loss sustained by the Contractor as a result of any variance of the conditions as shown on the plans and the actual conditions revealed during the progress of the work or otherwise. The word "conditions" as used in this paragraph includes, but is not limited to, site conditions, both surface and subsurface.

The Contractor shall examine the site, compare it with the drawings and specifications and shall satisfy itself as to the conditions under which the work is to be performed. The Contractor shall ascertain and check the location of all existing structures, utilities and equipment, which may affect its work. The Contractor shall be responsible to re- examine the site, as necessary, for performance of change orders or other proposed changes, which may affect its work. No allowance shall subsequently be made on the Contractor's behalf for any extra expense or loss of time, which is incurred due to failure or negligence on its part to make such examination.

SECTION 4 – CONTROL OF MATERIALS

4-1 MATERIALS AND WORKMANSHIP.

4-1.1 General.
Add the following paragraph after the second paragraph:

If the work, or any portion thereof, shall be damaged in any way, or if any defective materials or faulty workmanship shall be discovered at any time prior to the final payment, the Contractor shall forthwith, at its own cost and expense, repair said damage, or replace such defective materials, or remedy such faulty workmanship in a manner satisfactory to the Engineer. All work is to be performed in conformance with Section G CSI Specification sections 01 4516 Contractors Quality Control and 01 6600 Product Handling.

4-1.2 Protection of Work and Materials. Add the following:

The Contractor shall assume all risks and expense of interference and delay in his operations, and the protection from or the repair of damage to improvements being built under the contract, as may be caused by water of whatever quantity from floods, storms, industrial waste, irrigation, underground or other sources. However, the Contractor shall be entitled to an extension of time in accordance with the provisions of Subsection 6-6. The Contractor shall also assume full responsibility and expense of protecting, or removing and returning to the site of Work, all equipment or materials under his care endangered by any action of the elements.

Furthermore, the Contractor shall indemnify and hold the City harmless from all claims or suits for damages arising from his operations in dewatering the Work and control of water.

SECTION 5 – UTILITIES

5-1 LOCATION. Add the following:

The Contractor shall provide coordination with all the utility companies involved and shall provide protection from damage to their facilities. The Contractor shall be responsible for repair or replacement to said facilities made necessary by its failure to provide required protection. The Contractor is required to include utility requirements in the Construction Schedule per Section 6-1.

The Contractor shall utilize the services of "Underground Service Alert-Southern California" for utility locating in all public right-of-ways by calling 1-800-227-2600 at least 48 hours prior to any excavation.

The new piping shall go over or under the existing utilities as indicated on the plans. Where not indicated, the Contractor shall assume that the new piping will cross under the existing utility. The Contractor shall pothole existing utilities as shown on the plans, as directed by the Engineer or as deemed necessary by the Contractor. The cost of potholing herein specified shall be included in the prices paid for other items of work and no additional compensation will be allowed.

Where water lines exist, at each angle point, cross connection and "T" connection, the Contractor, for bidding purposes, shall assume the existence of a concrete thrust block located such as to resolve thrust loads. Any and all costs resulting from the existence of a thrust block, including costs for its removal and restoration if required, shall be deemed as being included in the prices bid for the various items of work.

Underground lines that are potentially hazardous such as oil company lines, natural gas mains, and electrical conduits will be carefully located by the owner as provided in the Standard Specifications. The Contractor shall take special precautions in determining the precise location and depth of these structures to insure that they will not be damaged by its operations.

Substitute the following for the last paragraph:

Prior to starting construction, the Contractor shall be responsible to determine the location and depth of all utilities which have been marked by the respective owners and which may affect or be affected by its operations. The Contractor also shall determine the location and depth of each service connection, whether or not marked. Full compensation for such work shall be considered as included in the prices bid for other items or work. If a utility which was marked or a service connection is found to interfere with the work after construction has commenced, the Contractor shall be solely responsible for all costs of any delay and for any costs which could have been avoided if the Contractor had located the utility prior to start of construction.

5-2 PROTECTION. Add the following:

If, in the course of construction, the Contractor damages a sewer lateral or water lateral, the Contractor shall be responsible to completely expose said lateral from the main line to the point of connection at private property to verify integrity of all joints to the satisfaction of the Engineer. This shall not be considered to be extra work and no extra costs shall be allowed therefor.

Sewers, including lateral repairs, shall be constructed of Vitrified Clay Pipe, unless otherwise approved in writing by the Engineer.

Add the following after the final paragraph:

As noted in subsections 5-2.1, 5-2.2 and 5-2.3 utilities are classified and are to be handled in one of three ways by the Contractor in the course of performing the contract.

Add the following subsections:

5-2.1 Noninterfering Utilities

Utilities that are not abandoned by the owner and do not physically interfere with the permanent work in its final location shall be supported, protected and maintained in place by the Contractor, and the Contractor shall be solely responsible for any damage, loss or injury, or death resulting from his/her failure to do so and the Contractor shall indemnify and hold harmless the City from any and all such consequences. Noninterfering utilities may, with the permission of the

owner and the Public Works Director, be relocated still farther from the permanent work in its final locations, but the Contractor shall not so consider, in submitting his bid, unless the relocation is shown on the plans.

5-2.2 Abandoned Utilities

Abandoned utilities are those portions of any utility which are no longer needed or desired by the owner and whose destruction is consented to by the owner and/or is permitted by notation on the plans. Abandoned utilities which physically interfere with the permanent work or with the construction thereof shall be removed by the Contractor and the Contractor shall be solely responsible for any damage, loss or injury, or death resulting from the removal and the Contractor shall indemnify and hold harmless the City from any and all such consequences.

5-2.3 Interfering Utilities

Any utility shall be deemed an interfering utility (1) which physically occupies any part of the space to be occupied by the permanent work in its final locations, or (2) whose length within the theoretical width of excavation for the permanent work exceeds five times the width of said theoretical excavation whether or not the utility physically interferes with the permanent work. Interfering utilities that are not abandoned by the owner shall be relocated so as not to interfere with the permanent work in its final location. Such relocation will be performed by the owner or the City unless otherwise shown on the plans.

5-2.4 Protection of Underground Hazardous Utilities. This Subsection shall apply to projects where there are underground utilities within the Work area which may be potentially hazardous if damaged. A hazardous substance shall be defined as one having the potential for an immediate disaster such as, but not limited to, gasoline, electricity, fuel oil, butane, propane, natural gas, chlorine or other chemicals.

Abandoned or inoperative utilities designed to carry hazardous substances and unidentified or unknown utilities shall be considered hazardous until determined otherwise. Whenever the Contractor is directed by the Engineer to tap these lines, the Contractor shall provide personnel specialized in this work and payment therefore will be considered as extra work per 3-3 of these Special Provisions.

The Contractor shall comply with the following requirements when working around underground hazardous utilities:

1) The Contractor shall not trench or excavate within the area where a utility known to carry a hazardous substance exists until its location has been determined by excavation or other proven methods acceptable to the Engineer. The intervals between exploratory excavations or location points shall be sufficient to determine the exact location of the line. Unless otherwise directed by the Engineer, excavation for underground hazardous utilities shall be performed by the Contractor and paid for as specified per 5-1 of these Special Provisions.

2) If it is determined that the horizontal or vertical clearance between the utility known to carry hazardous substances and the construction limit is less than 300 mm (12 inches) (450mm (18 inches) if scarifying), the Contractor shall confer with its owner. Unless the owner elects to relocate the line or take it out of service, the Contractor shall not excavate until the line has been completely exposed within the limits of construction.

3) Once the physical location of the utility known to carry hazardous substances has been determined, the Contractor, in cooperation with and with the concurrence of the utility owner, shall determine how to protect and/or support the utility from damage before proceeding with the Work.

4) During all excavation and trenching operations, the Contractor shall exercise extreme caution and protect the utilities from damage.

5) The Contractor shall notify the Engineer, the public agency maintaining records for the jurisdiction in which the Project is located and the owner, if known, whenever previously unidentified or unknown underground utilities are encountered so that the location can be accurately established and made a part of permanent substructure records.

Full compensation for protecting underground hazardous utilities as specified or noted on the Plans shall be considered as included in the prices bid for the various items of work.

5-3 REMOVAL.

Add the following:

It shall be the Contractor's responsibility irrespective of the notations on the plans to confirm or determine that a utility is to be abandoned before treating the same as an abandoned utility and shall assume all risks in so determining.

5-4 RELOCATION.

Section Not applicable
.Not Used

5-5 DELAYS.

Substitute the following:

If the contractor while performing the contract discovers utility facilities not identified by the public agency in the contract plans or specifications, he shall immediately notify the City and utility in writing. The Contractor shall not be entitled to damage or additional payment, nor shall it be entitled to standby time for labor if a delay does occur. The Contractor also shall not be entitled to damage or additional payment for equipment not on the project during the occurrence of the event that caused the related delay. The Engineer will determine the extent of the delay attributable to such interferences, the affect of the delay on the project as a whole, and any commensurate extension of time.

Any failure of the City and/or utility company to accomplish relocations in a reasonable manner in light of the Contractor's operations (to the extent such operations would otherwise be feasible and in accordance with the contract and as disclosed to the City prior to the Contractor encountering any such utility) shall entitle the Contractor to an extension of contract time to the extent that, in the judgment of the Engineer, the Contractor's completion of the overall contract work has been delayed; however, the Contractor shall be entitled to no other remedy and, in submitting its bid, thereby waives such other remedies, if any, unless the relocation delay is the result of arbitrary, capricious or malicious conduct by the City.

SECTION 6 - PROSECUTION, PROGRESS AND ACCEPTANCE OF THE WORK

6-1 CONSTRUCTION SCHEDULE AND COMMENCEMENT OF WORK.

6-1.1 Construction Schedule. Replace the entire subsection with the following:

Within ten (10) working days after the date of the CITY's execution of the Contract, the Contractor shall submit a proposed enhanced construction schedule to be negotiated with the Engineer for approval. The schedule shall be in accordance with 6-1.3 and 6-1.4 and shall be in sufficient detail to show chronological relationship of all activities of the Work. These include, but are not limited to: estimated starting and completion dates of various activities, submittal of shop drawings to the Engineer for approval, procurement of materials and scheduling of equipment.

Prior to issuing the Notice to Proceed, the Engineer will schedule a Pre-Construction Meeting with the Contractor to review the proposed construction schedule and delivery dates, arrange utility coordination and clarify inspection procedures.

Prior to starting any Work, the Contractor may be required to attend a Community Meeting to be scheduled by the Engineer. The meeting, to be held in the evening, will address the residents' questions and concerns regarding the Work, what can be expected during construction and vehicular and pedestrian access that may be temporarily restricted during construction. Compensation for attending these meetings shall be considered a part of Mobilization or, when there is no bid item for Mobilization, shall be considered as part of the bid items of work for this contract.

Notwithstanding any other provisions of the Contract, the Contractor shall not be obligated to perform any work and the CITY shall not be obligated to accept or pay for any work performed by the Contractor prior to delivery of a Notice to Proceed. The CITY's knowledge of work being performed prior to delivery of the Notice to Proceed shall not obligate the CITY to accept or pay for such work. The Contractor shall provide all required Contract bonds and evidences of insurance prior to commencing work at the site.

6-1.2 Commencement of the Work.
Section Not applicable

6-1.3 Criteria. The construction schedule shall conform to the following criteria:

1) The schedule shall be prepared using the latest version of Primavera, Microsoft Project or approved equal.

2) Work activities shall be based on the items of work per 2-5 and 2-6, and the following:

   a) Contract Unit Price items shall be subdivided into those portions to be constructed during each stage or phase of construction.

   b) Lump sum items shall be subdivided into those portions to be constructed during each phase or stage of construction.

3) Required submittals, working and shop drawings shall be included as activities.

4) Work to be performed by subcontractors shall be identified and shown as work activities.

5) The procurement of construction materials and equipment with long lead times for deliveries shall be included as activities.

6) Start and completion dates of each activity shall be illustrated.

7) Completion of all Work under the Contract shall be within the time specified in 6-7 of these Special Provisions and in accordance with the Plans and Specifications.

6-1.4 Requirements. In preparing the Rough Grading Schedule, the following items shall be considered:

Sequence of Grading work - The Contractor shall sequence the Work in a manner to expeditiously complete the project with a minimum of inconvenience to the adjacent owners and to conform to the following:

1. All vehicles utilized to transport import and export materials for the site are to limit activity to the hours between 9:00 a.m. and 3:00 p.m. unless otherwise approved by the Engineer.

2. All work on site shall only be performed between the hours of 7:30a.m. and 6:00p.m. on weekdays or on Saturday between unless otherwise approved by Engineer. Contractor would be fiscally responsible for any additional costs to the project associated with weekend activities for special inspection, testing or other City activities.

3. A move-in period of 5 calendar days will be allowed starting on the date in the Notice to Proceed.

4. Stockpile area. Schedule shall indicate date for cleanup of stockpile area.

5. Contractor is to coordinate and make accommodations for City ground breaking ceremony.

6. Contractor is to coordinate grubbing, site stockpiling with Engineer and City Arborists so as not to disrupt protected vegetation on adjacent parcels.

7. Contractor is to coordinate with a potentially concurrent construction project along the north edge of the site.

8. Contractor is to coordinate with the geotechnical engineer regarding export and import of soil.

Should the Contractor fail to meet the above requirements, the Engineer reserves the right to prohibit the Contractor from making further progress until the requirements have been satisfied to the satisfaction of the Engineer, Furthermore, if after notice is given to the Contractor to perform work to meet these requirements, and the Contractor refuses or for any reason fails to perform sufficiently to meet these schedules, CITY may perform said work and charge the Contractor for all costs incurred.

6-1.5 Updates. The Contractor shall submit 2 paper copies of the updated grading schedule to the Engineer on the first working day of each month.

If the Contractor decides to make a major change in the method of operations after commencing construction, or if the schedule fails to reflect the actual progress, the Contractor

shall submit to the Engineer a revised construction schedule in advance of beginning revised operations.

Full compensation for complying with all requirements of Section 6-1.5 shall be considered as included in the prices bid for the various items of work. If the Contractor fails to submit an updated Construction Schedule to the Engineer on the first working day of each month, the CITY will deduct one-fifth the amount of the Contract Unit Price for each work day after the due date, up to maximum of $300, that each monthly schedule update is not submitted.

6-2 PROSECUTION OF WORK
Section Not applicable

6-7 TIME OF COMPLETION.

6-7.1 General. Replace the first sentence with the following:

Time shall be of the essence in the Contract. The Contractor shall begin Work after the mailing by the Engineer to the Contractor, first class mail, postage prepaid, a Notice to Proceed and shall diligently prosecute the same to completion within 90 working days from the start date specified in the Notice to Proceed.

6-8 COMPLETION, ACCEPTANCE AND WARRANTY.

6-8.1 Completion.

If, in the Engineer's judgment, the Work has been completed and is ready for acceptance, the Engineer will so certify and will determine the date when the Work was completed. This will be the date when the Contractor is relieved from responsibility to protect the Work. The Engineer may cause a Notice of Completion to be filed and recorded with the Los Angeles County Recorder's Office. At the Engineer's option, the Engineer may certify acceptance to the City Council who may then cause a Notice of Completion to be filed and recorded with the Los Angeles County Recorder's Office.

6-8.3 Warranty.

Manufacturer's warranties and guaranties furnished for materials used in the Work and instruction sheets and parts listed supplied with materials shall be delivered to the CITY prior to acceptance of the Work.

The duration of the warranty or guaranty shall be the standard of the industry with a minimum of 1 year from the date of Notice of Completion or Date of Acceptance. The prime contractor will be required to warranty the entire project regardless of whether warranties from subcontractors are also required. Coordination and correction of any issue related to project scope that arises during that one (1) year warranty period will be the responsibility of the prime contractor.

6-8.3.1 Manufacturer's & Warranties

Manufacturer's warranties shall not relieve the Contractor of liability under these Specifications. Such warranties only shall supplement the Contractor's responsibility.

The CITY may require a manufacturer's warranty on any product offered for use.

6-9 LIQUIDATED DAMAGES. In each of the two paragraphs, substitute "$ ***500*** in place of "$250" as the amount of the liquidated damages per each consecutive calendar day.

6-11 SEQUENCE OF CONSTRUCTION

6-11.1 Multiple Headings. This scope of work represents the initial phase of the ultimate build out intended for the site. The contractor is to provide a full survey of completed work in addition to confirmation of all temporary benchmarks provided on site to confirm accurate completion of this phase of work. The awarded bidder will make accommodations and work with the Engineer and the awarded bidder for subsequent phases of work to ensure an orderly and demobilization of the site allowing the next awarded bidder to mobilize without obstruction.

SECTION 7 - RESPONSIBILITIES OF THE CONTRACTOR

7-2 LABOR

7-2.3 Payroll Records. Add the following:

Any payroll and payroll records required for this project shall be submitted, for each week in which any contract work is performed, to the Engineer. Retention of $5,000 per report per pay period will be withheld from a progress payment for a late or missing report. A report shall be deemed as late or missing when not submitted to the Engineer within 10 calendar days from the close of the pay period for which the report applies. In addition, a non-refundable deduction of $100 per report per day will be deducted from payments due the Contractor for each late or missing report. The $100 non-refundable deduction per day will be incurred beginning on the first day the report is late or missing.

Add the following subsections:

7-2.6 Department of Industrial Relations' monitoring and enforcement of prevailing wage laws

California Labor Code:

1771.1. (a) A contractor or subcontractor shall not be qualified to bid on, be listed in a bid proposal, subject to the requirements of Section 4104 of the Public Contract Code, or engage in the performance of any contract for public work, as defined in this chapter, unless currently registered and qualified to perform public work pursuant to Section 1725.5. It is not a violation of this section for an unregistered contractor to submit a bid that is authorized by Section 7029.1 of the Business and Professions Code or by Section 10164 or 20103.5 of the Public Contract Code, provided the contractor is registered to perform public work pursuant to Section 1725.5 at the time the contract is awarded.

SB 854 amended the Labor Code to require all contractors bidding on public work to register with the Department of Industrial Relations (DIR) and to pay an annual fee. The registration requires contractors to provide the State with evidence of the contractors' compliance with a number of statutory requirements. The registration requirement took effect on July 1, 2014 to fund the Department of Industrial Relations' monitoring and enforcement of prevailing wage laws. The registration period is open now, and contractors and subcontractors wishing to work on a public works project must be registered by March 1, 2015. For public agencies/awarding bodies, the new law requires that all public works projects with bids due after March 1, 2015, or awarded on or after April 1, 2015, use only registered contractors and subcontractors. The bill also requires awarding bodies to include notice of the registration requirement in their bid invitations and bid documents. In addition, public agencies must also file notice of their public works projects using DIR approved forms.

Registration is completed through an online application and requires a non-refundable $300 fee to be paid by the contractors and subcontractors. The registration process requires contractors to:

- provide workers' compensation coverage to its employees
- hold a valid Contractors State License Board license
- have no delinquent unpaid wage or penalty assessments
- not be subject to federal or state debarment

Contractors must pay an annual renewal fee by July 1 of each year. The registration form is located on the DIR's website at http://www.dir.ca.gov/DLSE/dlsepublicworks.html.

To help awarding bodies and contractors comply with the new requirements, the DIR will post a database of registered contractors and subcontractors on its website. While non-registered contractors may not be awarded public works contracts after the effective date, inadvertently listing an unregistered subcontractor on a bid will not necessarily invalidate that bid. In addition, the registration requirement does not apply to private jobs that are determined to be public works after the contract has been awarded.

The City is required to provide notice of award to the DIR on all projects. Said notice is by an online application and within five (5) days of project award. The online application is at: https://www.dir.ca.gov/pwc100ext/

7-3 INSURANCE.

7-3.2 General Liability Insurance. Replace the second sentence of the second paragraph with the following:

The Contractor must maintain at its sole expense the following insurance, which will be full coverage not subject to self-insurance provisions:

1) Automobile Liability, including owned, non-owned and hired vehicles, with at least the following limits of liability:

   a). Combined single limits of $2,000,000 per occurrence.

2) General Liability including coverage for premises, products and completed operations, independent contractors, personal injury and contractual obligations with combined single limits of coverage of at least $3,000,000 per occurrence, with an annual aggregate of no less than $5,000,000.

Add the following:

The Contractor must include all subcontractors as insureds under its policies or must furnish separate certificates and endorsements for each subcontractor.

7-3.3 Worker's Compensation Insurance. Add the following after the fourth paragraph:

Worker's Compensation Insurance shall be with limits as required by the State of California and Employer's Liability with limits of at least $1,000,000.

7-3.4 Auto Liability Insurance Delete subsection in its entirety**.**

7-5 PERMITS. Replace the second paragraph with the following:

The Contractor shall obtain a City of Torrance Business License, a no-fee Construction Excavation Permit and Building & Safety Permit before commencing construction.

Full compensation for complying with the above requirements shall be considered as included in the prices bid for the appropriate items of work.

Add the following requirements:

Full compensation for complying with the above requirements shall be considered as included in the prices bid for the various items of work. However, this is not the amount that will be paid to the Contractor. The amount that shall be paid to the Contractor shall be the actual permit and inspection fees paid to the City of Torrance with no mark-up or extra costs, except the Contractor shall be solely responsible for any fee charged to re-inspect rejected or incomplete work.

Unless otherwise authorized by the City of Torrance Community Development Department Permit and approved plan, all storm drain work shall be performed in accordance with these Specifications and Special Provisions.

7-6 THE CONTRACTOR'S REPRESENTATIVE

The Contractor’s Representative shall be approved by the CITY prior to the start of the Work. If the designated representative is rejected, the Contractor shall immediately designate another representative in writing and submit to the City for consideration. The CITY shall have the authority to require the Contractor to remove its representative and/or alternate representative at any time and at no cost to the CITY.

7-8 WORK SITE MAINTENANCE.

7-8.1 General.

Unless directed otherwise by the Engineer, the Contractor shall furnish and operate a self-loading motor sweeper with spray nozzles at least once each working day to keep paved areas acceptably clean to the City whenever construction, including restoration, is incomplete.

7-8.6 Water Pollution Control.

7-8.6.1 General.

NPDES General Permit, Notice of Intent (NOI) and Notice of Termination (NOT).

Construction activities including clearing, grading and excavating that result in land disturbances of equal to or greater than one acre are covered by the National Pollutant Discharge Elimination System General Construction Permit, State Water Board Order No. 2009-0009-DWQ and any amendments thereto. A copy can be downloaded at:

http://www.waterboards.ca.gov/board_decisions/adopted_orders/water_quality/2009/wqo/wqo2009_0009_dwq.pdf

Dischargers obtaining coverage will file electronically for coverage under Order No. 2009-0009-DWQ. Order No. 2009-0009-DWQ is a Risk Based permitting approach. The Contractor is required to review the State Water Resources Control Board website and determine this project's risk level.

Order No. 2009-0009-DWQ includes, in Attachment A, requirements for all Linear Underground/Overhead Projects (LUPs) that are covered under the Small LUP General Permit 2003-007-DWQ. LUPs will be broken into project segments designated as LUP Type 1, Type 2, and Type 3. These LUP Types are analogous to the risks levels for traditional construction projects.

This General Construction Permit regulates pollutants in discharges of storm water associated with construction activity. To obtain authorization for proposed storm water discharges, pursuant to this General Construction Permit, the CITY must submit to the Storm Water Multiple Application and Reporting Tracking System (SMARTS) a Notice of Intent (NOI), compliance and monitoring data and Annual Reports, when required, and a Notice of Termination (NOT). The Contractor shall provide to the CITY, at the required time, all required information necessary for the CITY to comply with these requirements.

The Contractor shall utilize the Storm Water Pollution Prevention Plan (SWPPP) provided. See appendix V.

Following Construction and the Contractor's installation of any post-construction storm water Best Management Practices BMPs (for CITY approval), the Contractor shall notify the CITY in writing to request for consideration to terminate coverage under the General Construction Permit for a complete project and to submit a NOT via the SMARTS.

Full compensation for preparation, administration and all other work related of the NOI, NOT, required fees, construction, and post construction BMPs, sampling, analysis and reporting as required by Order No. 2009-0009-DWQ and all other related costs shall be considered as included in the prices bid for the various items of work.

7-8.6.2 Best Management Practices (BMPs). Replace the entire subsection with the following:

Best Management Practices shall be defined as any program, technology, process, siting criteria, operating method, measure, or device which controls, prevents, removes, or reduces pollution. The Contractor shall obtain and refer to the California Stormwater Quality Association's:

Stormwater Best Management Practice Handbook Portal: Construction. The publication is available from CASQA.

The Contractor shall have a minimum of two (2) readily accessible copies of each publication on the Work site at all times. The Contractor shall implement BMPs in conjunction with the following construction operation and activities:

CONSTRUCTION PRACTICES	Clearing, Grading and Excavating
	Water Conservation Practices
	Dewatering
	Paving Operations
	Structure Construction and Painting
MATERIAL MANAGEMENT	Material Delivery and Storage
	Material Use
	Spill Prevention and Control
WASTE MANAGEMENT	Solid Waste Management
	Hazardous Waste Management
	Contaminated Soil Management
	Concrete Waste Management
	Sanitary/Septic Waste Management
VEHICLE AND EQUIPMENT MANAGEMENT	Vehicle and Equipment Cleaning
	Vehicle and Equipment Fueling
	Vehicle and Equipment Maintenance

The Contractor shall implement the following BMPs in conjunction with the previously listed construction operation activities:

VEGETATIVE STABILIZATION	Scheduling of Planting
	Preservation of Existing Vegetation
	Temporary Seeding and Planting
	Mulching
PHYSICAL STABILIZATION	Geotextiles and Mats
	Soil Stabilizer/Dust Control
	Temporary Stream Crossing
	Stabilized Construction Roadway
	Stabilized Construction Entrance
RUNOFF DIVERSION	Sodding, Grass Plugging, and Vegetative Buffer strips
	Earth Dikes, Drainage Swales, and Lined Ditches
	Top and Toe of Slope Diversion Ditches/Berms
	Slope Drains and Subsurface Drains

VELOCITY REDUCTION	Flared Culvert End Sections
	Outlet Prottection/Velocity Dissipation Devices
	Check Dams

	Slope Roughening/Terracing/Rounding
SEDIMENT TRAPPING	Slit Fences
	Straw Bale Barrier
	Sand Bag Barrier
	Brush or Rock Filter
	Storm Drain Inlet Protection
	Sediment Traps
	Sediment Basin

Additional BMPs may be required as a result of a change in actual field conditions, contractor activities, or construction operations. Contractor is also required to comply with all BMP requirements listed in the plans and specifications. When more than one BMP is listed under each specific BMP category, the Contractor shall select the appropriate and necessary number of BMPs within each category in order to achieve the BMP objective.

BMPs for contractor activities shall be continuously implemented throughout the year. BMPs for erosion control and sedimentation shall be implemented during the period from October 15 to April 15, and whenever the National Weather Service predicts rain within 24 hours. BMPs for erosion control and sedimentation shall also be implemented prior to the commencement of any contractor activity or construction operation that may produce run-off, and whenever run-off from other sources may occur.

The CITY, as a permittee, is subject to enforcement actions by the State Water Resources Control Board, the Environmental Protection Agency and private citizens. The CITY may assess the Contractor a penalty of $1,000 for each calendar day that the Contractor has not fully implemented the appropriate BMPs and/or is otherwise in noncompliance with these provisions. In addition, the CITY will deduct, from the final payment due the Contractor, the total amount of any fines levied on the CITY, plus legal and staff costs, as a result of the Contractor's lack of compliance with these provisions and/or less than complete implementation of the appropriate BMPs.

Full compensation for the implementation of BMPs, including the construction, removal, and the furnishing of all necessary labor, equipment, and materials, shall be considered as included in the prices bid for the various items of work .

7-8.6.3 Storm Water Pollution Prevention Plan (SWPPP). Replace the entire subsection with the following:

See attached SWPPP plan is Appendix V.

7-8.7 Temporary Light, Power, and Water. Add the following:

The Contractor shall furnish, install, maintain, and remove all temporary light, power, and water at its own expense. These include piping, wiring, lamps and other equipment necessary for the Work. The Contractor shall not draw water from any fire hydrant (except to extinguish a fire), without obtaining permission from the water agency concerned.

The Contractor shall obtain a construction water meter from the CITY by calling Global Water at 855-354-5623. A $1,000 deposit is required and refundable upon return of the meter in good working condition. The Contractor shall pay for the water used, at the CITY's current water rates.

Some water mains in Torrance are owned/operated by California Water Service. For rental of a hydrant meter the contractor shall call California Water Service at (310) 257-1400.

7-8.8 Contractor's Storage Yard. The Contractor shall be responsible for obtaining a storage yard for the duration of the Work. If the proposed location of the yard is located within the boundaries of the CITY, the Contractor shall obtain prior approval from the Engineer.

7-8.9 Graffiti Removal. The Contractor shall maintain the Work, all of its equipment, and all traffic control devices, including signage, free of graffiti throughout the duration of the Contract. The Contractor shall respond to any request from the Engineer to remove graffiti within 4 hours of notification. Should the Contractor fail to respond to such request, the CITY reserves the right to make other arrangements for the requested graffiti removal and deduct the cost from any monies due the Contractor.

7-15 PROJECT CONSTRUCTION SIGNS AND PORTABLE CHANGEABLE MESSAGE SIGNS.

A Measure R sign will be provided by the City.

The Contractor shall furnish and install two Project Construction Signs at locations to be determined by the Engineer. The signs shall be in accordance with the sample shown in Appendix VI. An Autocad drawing will be provided by the City for the construction sign template.

Full compensation for furnishing, installing, maintaining and removing signs shall be considered as included in the prices bid for the various items of work.

SECTION 8 - UNUSED

SECTION 9 - MEASUREMENT AND PAYMENT

9-1 MEASUREMENT OF QUANTITIES FOR UNIT PRICE WORK.

9-1.2 Methods of Measurement. Add the following subsections:

9-1.2.1 Payment for Labor and Materials.

The Contractor shall pay and cause the subcontractors to pay any and all accounts for labor, including Worker's Compensation premiums, State Unemployment and Federal Social Security payments and all other wage and salary deductions required by law. The Contractor also shall pay and cause the subcontractors to pay any and all accounts for services, equipment and materials used by it and the subcontractors during the performance of work under this contract. All such accounts shall be paid as they become due and payable. If requested by the Engineer, the Contractor shall immediately furnish the City with proof of payment of such accounts.

9-1.2.2 Measurement and Payment

Payment of each item will include full compensation for furnishing all labor, materials, tools, equipment and backup equipment; transportation and technical competence for performing all work necessary to complete each item as indicated on the plans and as specified in these Contract Documents, including but not limited to obtaining all applicable certifications necessary for specialty personnel and major equipment in conformance with Subsection 7-5, and all other applicable permits; securing a storage yard to store all equipment and materials to be used on the

job, disposal of waste materials, restoration of the site, etc. The storage yard may also be used as a temporary storage for excavated materials, and traffic control items. Costs for mobilization/demobilization shall be included in the lump sum price bid for GENERAL REQUIREMENTS and no additional compensation shall be made.

9-2 LUMP SUM WORK. Replace the second paragraph with the following:

The Contractor shall, within five (5) working days of receipt of a request from the Engineer, submit a complete breakdown of lump sum bid prices showing the value assigned to each part of the work, including an allowance for profit and overhead. In submitting the breakdown, the Contractor certifies that it is not unbalanced and that the value assigned to each part of the work represents its estimate of the actual cost, including profit and overhead, of performing that part of the work. The breakdown shall be sufficiently detailed to permit its use by the Engineer as one of the bases for evaluating requests for payment. No extra costs shall be allowed for providing these breakdowns.

9-3 PAYMENT.

9-3.2 Partial and Final Payment. Replace the third paragraph with the following:

For each progress estimate, 5 percent will be deducted and retained by the CITY, and the remainder less the amount of all previous payments will be paid. In addition, 125% of the amount of unreleased “STOP” Notices will be withheld.
Add the following:

The Contractor shall submit all requests for payment on a Progress Payment Invoice.

Prior to submittal of said invoice, all items for which payment is requested shall be checked and approved in writing by the Engineer. No payments will be made unless all back-up data is submitted with the payment request and the Progress Payment Invoice is signed by both Contractor and Engineer.

9-3.4 Mobilization. Replace the entire subsection with the following:

Mobilization shall include the provisions of the Construction Schedule, Best Management Practices and Storm Water Pollution Prevention Plan; Sewage Spillage Prevention; Emergency Response Plan; site review; obtaining all permits, insurance, and bonds; moving onto the site all plant and equipment; furnishing and erecting plants, temporary buildings, and other construction facilities, and removal of same at completion of the Work; and other work, all as required for the proper performance and completion of the Work.

Mobilization shall include, but not be limited to, the following items:

(a) Submittal and modification, as required, of the Construction Schedule.

(b) Moving on to the site of all Contractor's plant and equipment required for the first month's operations.

(c) Installing temporary construction power and wiring.

(d) Establishing fire protection system.

(e) Developing construction water supply.

(f) Providing on-site sanitary facilities and portable water facilities, as required.

(g) Arranging for and erection of Contractor's work and storage yard.

(h) Submittal of all required insurance certificates and bonds, including subcontractors.

(i) Obtaining all required permits.

(j) Posting all OSHA required notices and establishment of safety programs.

(k) Potholing and other research and review as necessary to verify site conditions and utility locations

(l) Having the Contractor's Superintendent present at the job site full-time.

(m) Removal (including all spray-painted markings on any surface), cleanup, and restoration

Add the following subsection:

9-3.5 Noncompliance with Plans and Specifications.

Failure of the Contractor to comply with any requirement of the Plans and Specifications, and/or to immediately remedy any such noncompliance upon notice from the Engineer, may result in suspension of Contract Progress Payments. Any Progress Payments so suspended shall remain in suspension until the Contractor's operations and/or submittals are brought into compliance to the satisfaction of the Engineer. No additional compensation shall be allowed as a result of suspension of Progress Payments due to noncompliance with the plans or specifications. The Contractor shall not be permitted to stop work due to said suspension of Progress Payments.

Add the following section:

9-4 CLAIMS.

The Contractor shall not be entitled to the payment of any additional compensation for any cause, including any act, or failure to act, by the CITY, or the happening of any event, thing or occurrence, unless the Contractor shall have given the CITY due written notice of potential claim as hereinafter specified.

The written notice of potential claim shall set forth the reasons for which the Contractor believes additional compensation will or may be due, the nature of the costs involved, and, insofar as possible, the amount of the potential claim. Said notice shall be submitted on a form approved by the CITY at least forty-eight (48) hours (two working days) in advance of performing said work, unless the work is of an emergency nature, in which case the Contractor shall notify and obtain approval from the Engineer prior to commencing the work. The Engineer may require the Contractor to delay construction involving the claim, but no other work shall be delayed, and the Contractor shall not be allowed additional costs for any said delay but may be allowed an extension of time if the Engineer agrees that the work delayed is a controlling element of the Construction Schedule. The Contractor shall be required to submit any supporting data (or a detailed written explanation justifying further delay) within five (5) work days of a request from the

Engineer and shall be responsible for all costs associated with any delays resulting from late and/or incomplete submittals. By submitting a Bid, the Contractor hereby agrees that this subsection shall supersede 6-6.3 and 6-6.4 of the Standard Specifications.

It is the intention of this subsection that differences between the parties arising under and by virtue of the Contract be brought to the attention of the Engineer at the earliest possible time in order that such matters may be settled, if possible, or other appropriate action promptly taken. The Contractor hereby agrees that it shall have no right to additional compensation for any claim that may be based on any such act, failure to act, event, thing or occurrence for which no written notice of potential claim as herein required was timely filed.

PART 3 - CONSTRUCTION METHODS

SECTION 300 - EARTHWORK

Add the following paragraphs:

Prior to executing any earthwork or import of material to the site, the contractor must establish communication and notify DTSC of all earthwork activities. The Contractor is responsible to provide technical reports signed by a Professional Geologist to confirm that imported materials meet the Geotechnical Engineer's requirements and do not exceed hazardous levels allowable by U.S. EPA Regional Screening levels (RSL's). Reports will be provided at the contractors expense as a component of the scope of work and will be authored by a LAB certified by the California Environmental Laboratory Accreditation Program (ELAP). Reports are to be reviewed, confirmed and signed by the City and/or their authorized representative and approved by DTSC prior to import. The contractor is responsible to facilitate the communication, review and approvals by the City contracted Geologist and Geotechnical Engineer and DTSC in a timely manner in line with their proposed schedule. All import activities must be in compliance with procedures defined on the DTSC Information Advisory Clean Imported Fill Material web site:
https://www.dtsc.ca.gov/Schools/upload/SMP_FS_Cleanfill-Schools.pdf

The City is currently pursuing an option to acquire a volume of suitable fill that may be used as imported fill for this project as shown on the grading plans. If successful, the City will address the item in an addendum. Otherwise, a Bidder is required to funish/install all imported fill per these specifications.

Payment for Earthwork shall be paid for under the lump sum price for EARTHWORK and shall include, but not limited to, all excavation removals, subgrade preparation, soil import, grading and compaction, and labor and equipments, and incidentals, necessary to complete the work per the grading plan and no additional compensation shall be made.

300-1 CLEARING AND GRUBBING.

300-1.3 Removal and Disposal of Materials.

300-1.3.1 General.

Unless otherwise stated on the Plans or Specifications, all material removed from the Work shall become the property of the Contractor and shall be disposed of in a lawful manner. Removals shall include, but not limited to, all excess excavation material, trees and plants, debris, interfering portions of curb, gutters, asphalt and PCC concrete pavements and sidewalks

(including base, where applicable), and miscellaneous items as shown on the Plans. The Contractor shall conform to the following requirements:

1) The Contractor shall not start any removal work unless it is prepared to perform reconstruction work within 24 hours of the time removals were begun, unless otherwise approved by the Engineer.

2) The Contractor shall complete forming and pouring of PCC construction within five (5) working days following the removal of existing material at any location.

3) The Contractor shall not remove on-site improvements until it is prepared to construct the adjacent street section and shall promptly restore all such improvements as applicable, upon completion of the adjacent street work.

All concrete removed shall be hauled off the Work site no later than the calendar day following the day that the removal is performed.

Prior to making removals, the Contractor shall meet with the Engineer to verify the limits of removals, locations of joins, to establish smooth joins and to ensure proper drainage. The Contractor may make minor changes in the location of joins and the limits of removals, provided a smooth join and proper drainage can be achieved and it has obtained prior written approval from the Engineer.

In order to protect the public streets from deterioration due to hauling of materials, the Contractor shall submit, prior to the Pre-Construction Meeting, for approval a proposed route for hauling of materials for disposal. Upon approval, the Contractor shall strictly adhere to that route, unless written permission from the Engineer is obtained to change the route.

300-1.3.2 Requirements.

a) **Bituminous Pavement.** Replace the first and second sentences with the following: Bituminous pavement shall be removed to neatly sawed edges.

(d) **Trees.** The City maintains a tree conservation policy. Unless otherwise shown, all trees are to be protected in place. Demolition and destruction of trees and tree parts, including trunks, branches and foliage, shall be limited to tree removals as shown on the Plans. Root pruning and removals shall be limited to the minimum required to construct new improvements where trees are to be conserved.

The Engineer shall place a visible removable “tag” on each tree proposed to be removed at least five (5) work days and no earlier than ten (10) work days prior to removal. Said “tag” is intended to give adjacent residents proof of trees to be removed or saved. Tags shall be on the sidewalk side of trees and located at least five feet (5’) above ground.

The Contractor shall remove only trees that have been marked by the Engineer for removal. Trees shall be removed in a workmanlike manner so as not to injure other standing trees, plants, and improvements which are to be preserved.

Stumps shall be ground down three feet (3’) below ground surface within five (5) feet of the center of the stump. All surface roots shall be removed within the parkway.

The Contractor shall conform to the following requirements:

1) The cutting down or removal of trees is prohibited after the prescribed working hours unless permission is granted by the Engineer.

2) All debris from pruning or removing a tree shall be cleaned up and hauled away from the Work site on the same day that the tree is cut or pruned. Firewood-size logs may be left neatly piled for residents to pick up for no longer than three (3) days.

3) All holes created from removal of tree stumps shall be backfilled and graded to finish level by the end of the workday.

4) Sprinkler systems disrupted by the Contractor shall be capped or restored by the end of the workday. Capped systems shall be restored to original working condition within three (3) days.

(e) **Miscellaneous Removals and Relocations.** This work shall include all removals not specifically listed in the Proposal or otherwise covered by these Specifications, and all necessary relocations and restorations of walls, fences, plants, hardscape, signs and other items, whether shown on the Plans or not, and as necessary to complete the improvements.

300-1.3.3 Construction and Demolition Debris Recycling.

General. Consistent with the Agency's efforts to comply with the California Integrated Waste Management Act of 1989 (AB 939), the Contractor shall reduce, reuse, and/or recycle to the maximum extent feasible, the construction and demolition debris (debris) generated by this Contract hereby diverting the debris from disposal facilities, saving landfill space, and conserving virgin materials and natural resources.

Definitions.

Shall be as defined in the TORRANCE MUNICIPAL CODE, DIVISION 4, CHAPTER 3, ARTICLE 8 (or Section 43.8.1).

RECYCLING SUMMARY.

The Contractor shall prepare and submit a Recycling Summary report using the form included as Appendix IV summarizing the disposal, reuse, and/or recycling activities which occurred throughout the Contract duration. This report shall be submitted by the Contractor to the Agency, before or with its request for the final Progress Payment for said Contract.

Failure of the Contractor to submit the Recycling Summary within the time specified will result in damages being sustained by the Agency. Such damages are, and will continue to be, impracticable and extremely difficult to determine. For failure to submit the Recycling Summary, as required, the Contractor shall pay to the Agency, or have withheld from monies due it, the sum of $10,000 for a contract of $500,000 or more. The Contractor shall pay to the Agency, or have withheld from monies due it, 2% of the total contract amount for a contract of $499,999 or less.

Execution of the Contract shall constitute agreement by the Agency and Contractor that $10,000 (2% for contracts $499,999 or less) is the minimum value of the costs and actual damage caused by the failure of the Contractor to submit the Recycling Summary within the

time specified. Such sum is liquidated damages and shall not be construed as a penalty, and may be deducted from payments due the Contractor.

PAYMENT.

The cost of construction and demolition debris recycling and completing the Recycling Summary report shall be considered as included in the prices bid for the various Bid items. The quantities reported will be used for information gathering purposes and not for purposes of payment to the Contractor.

300-1.4 Payment.

Payment for clearing and grubbing shall be considered as included in the various bid items to which this work is appurtenant and no additional compensations will be allowed therefore.

300-2 UNCLASSIFIED EXCAVATION.

300-2.2 Unsuitable Material.

300-2.2.1 General.

Contamination was not observed during the field exploration. However, there is a history of contamination at the site due to the previous industrial facility. The awarded contractor is to make provisions for the handling of contaminated soil during construction. A chain of communication is to be in place and procedures outlined to reduce construction interruptions. Procedures for handling contaminated soil include onsite personnel trained in accordance with 29 Code of Federal Regulations (CFR) Part 1910.120 , chain-of-custody procedures and forms, equipment suitable for excavating and transporting contaminated soils, and a site selected for the proper disposal and treatment of contaminated soils. The California Department of Toxic Substances Control should be notified prior to any earthwork performed at the site.

If unsuitable material is found, as defined by the geotechnical report, inspection or DTSC requirements, the Contractor shall remove said material to the limits to be determined by the Engineer and shall replace said material with select fill or base material, as to be determined by the Geologist, Soil Management Plan, and Engineer.

300-2.9 Payment.

Payment for excavation and backfill of unsuitable material shall be made as Extra Work or Force Account Work shall include all removals, subgrade preparation, grading and compaction, and labor and equipments, and incidentals, necessary to complete the work.

300-10 GEOTEXTILES FOR SEPARATION

300-10.1.1 Placement. Replace the first paragraph with the following:

The installation area shall be prepared by clearing all debris or obstructions which may damage the geotextile. Trees and large bushes should be cut at ground level. In most cases, all native vegetation, roots and topsoil must be removed from the roadway subgrade prior to geotextile placement. Where required by the Contract Documents, soft and otherwise unsuitable areas shall be identified, excavated, and backfilled with selected material in accordance with 300-2.2 of these Special Provisions. Stabilization of these areas may be enhanced by use of a

geotextile at the bottom of the excavation before backfilling. However, when designed for soft or wet subgrade conditions, native vegetation, roots, and topsoil may be left in place so as to limit disturbance and resulting shear strength loss of the subgrade soil.

If site conditions require geotextile seaming, the geotextile shall be cut and seamed on the curve. The fold or overlap shall be in the direction of construction and shall be held in place as prescribed above.

The aggregate base or sub-base (aggregate) shall be placed by end dumping adjacent to the geotextile or over previously placed aggregate. End dumping or tail gate dumping of aggregate on the geotextile will not be permitted. The aggregate shall be spread from the back dumped pile using a lightweight dozer or skip loader. A sufficient thickness of aggregate should be in place prior to dumping to minimize the potential of subgrade pumping and localized subgrade failure. Equipment shall not be allowed directly on the fabric.

The aggregate shall be placed on the geotextile in lifts not less than 6 inches thick. Traffic shall not be permitted directly on the geotextile. Sudden stops or turns by equipment operating on aggregate placed over the geotextile shall be avoided. A smooth drum roller shall be used to achieve specified aggregate density. Any ruts occurring during construction shall be filled with additional aggregate and compacted to the specified density. Vibratory compaction shall not be used on the initial lift over the geotextile.

Damaged geotextiles, as identified by the Engineer, shall be repaired immediately. The damaged area plus an additional 3 feet around the damaged area shall be cleared of all fill material. A geotextile patch extending 3 feet beyond the perimeter of the damage shall be constructed as directed by the Engineer. Sewing of a geotextile patch may be required over soft subgrades as directed by the Engineer. Damaged geotextiles shall be repaired at no cost to the CITY.

The cost for geotextiles shall be considered as included in the prices bid for the various Bid items.

SECTION 306 - UNDERGROUND CONDUIT CONSRUCTION

306-1.2 INSTALLATION OF PIPE

306-1.2.1 Bedding.

306-1.2.1.1 General. Replace the second sentence of the third paragraph with the following:

There shall be 4 inches minimum of bedding below the pipe barrel of sewer and storm drain pipes and 6 inches minimum of bedding below the pipe barrel of water pipes.

Bedding material for ductile iron water lines shall be sand conforming to the requirements of 200-1.5.3 (minimum SE of 75) and 200-1.5.5 and shall be compacted to 95 percent of maximum density where the trench is located under structures, and 90 percent of maximum density elsewhere.

Bedding material for reclaimed water pipelines shall have a minimum SE of 30. Bedding shall be imported sand with 100 percent passing a 3/8-inch sieve and not more than 20 percent passing a 200-mesh sieve.

Bedding for sewer pipes shall conform to City of Torrance Standard Plan T204. Bedding for storm drain pipes shall conform to City of Torrance Standard Plan No. T302.

306-1.2.2 Pipe Laying.

Unless otherwise shown on the Plans or directed by the Engineer, minimum pipe cover for water pipes shall be 42 inches below proposed grade. Installation of ductile iron water mains and appurtenances shall conform to the requirements of AWWA C600. Installation of PVC pipes shall conform to the requirements of AWWA C900 and C905. The Contractor shall install pipe closure sections, fittings, valves and appurtenances shown, including pipe supports, bolts, nuts, gaskets and joining materials necessary for a complete installation.

At all times when the work of installing water mains, reclaimed water pipelines, sewers or storm drains is not in progress, all openings into the pipe and the ends of the pipe in the trenches or structure shall be kept tightly closed to prevent entrance of animals and foreign materials. The Contractor shall take all necessary precautions to prevent the pipe from floating due to water entering the trench from any source, shall assume full responsibility for any damage due to this cause and shall, at no cost to the CITY, restore and replace the pipe to its specified condition and grade if it is displaced due to floating. The Contractor shall maintain the inside of the pipe free from foreign materials and in a clean and sanitary condition until its acceptance by the Engineer.

Unless otherwise shown on the Plans or directed by the Engineer, concrete thrust blocks shall be constructed at all changes in direction. Thrust blocks shall be constructed against undisturbed earth. Each thrust block shall be placed so that valves and fittings are accessible for repair. Thrust blocks shall be as shown on City of Torrance Standard Plan No. T713 or as directed by the Engineer.

The Contractor shall furnish and place a blue tape marked “Caution Water” every 36-inches or less on top of the bedding and prior to placing concrete slurry or densified backfill along the length of the potable pipelines. The Contractor shall furnish and place an identification tape marked "CAUTION-RECLAIMED WATER LINE BELOW," for reclaimed water pipes in accordance with 207-25.9 of these Special Provisions.

All water lines shall be installed with a two (2) feet clearance from existing utility lines. A minimum of 1-foot clearance shall be provided when crossing utility lines unless directed otherwise by the Engineer. Separation of water mains from sewer and storm drain lines shall conform to the requirements of City of Torrance Standard Plan No. T714.

All exposed piping shall be adequately supported with devices of appropriate design. Where details are shown on the Plans, the supports shall conform thereto and shall be placed as indicated; provided that the support for all piping shall be complete and adequate regardless of whether or not supporting devices are specifically called for on the Plans.

306-1.2.13 Bedding for Plastic Pipe and Fittings.

The bedding zone shall extend down to not less than 4 inches below the pipe or bell, whichever is lower in elevation.

306-1.2.13 Installation of Plastic Pipe and Fittings

PVC pipe construction shall conform to AWWA Manual No. M23, "PVC Pipe - Design and Installation," and the manufacturer's installation guide. Combined deflections at PVC pipe joints with factory-assembled bell couplings shall not exceed 2 degrees or 75 percent of that recommended by the manufacturer, if smaller. All fittings and valves shall be supported so that

the pipe is not subjected to the weight of those appurtenances.

306-1.2.14 Flexible Couplings. Flexible couplings shall be installed according to the following requirements:

1) Clean each pipe end for a distance of 6 to 8 inches. Remove oil, dirt, loose scale, and rust so that the gaskets will seat on the pipe barrel to provide a positive seal. Wire brushes or non-oily rags may be used, depending on the condition of pipe ends.

2) Slip the follower rings over the pipe ends and slide them back over the cleaned area.

3) Wipe the gaskets clean, immerse them in soapy water or approved gasket lubricant, and slide them over the pipe ends.

4) Clean the coupling middle ring, paying particular attention to flare on the ends where the gasket will seat. Slip the middle ring entirely over the end of the pipe.

5) Position the end of the pipe to be joined to the other pipe such that a 1/2-inch gap is maintained between pipes. Center the coupling middle ring over the gap.

6) Lubricate the pipe and the flares of the middle ring with soapy water or gasket lubricant. Slide the gaskets and followers into place making sure the gaskets are pushed under the middle ring flare all the way around.

7) Insert the bolts. Nuts should be run on with the rounded or chamfered edge toward the follower ring.

8) Wrenching should be done progressively, drawing up the bolts on opposite sides a little at a time and returning to retighten until all bolts have a uniform tightness. During wrenching it is advisable to strike the follower rings with a hammer occasionally to make sure they are seating properly.

9) Torque application shall be in accordance with the manufacturer's recommendations.

306-1.3. Backfill and Densification.

306-1.3.1 General.

Where trench is less than or equal to two (2) feet wide in the roadway, the trench shall be backfilled with a sand-cement slurry (100-E-100) backfill per City of Torrance Standard Plan No. T116-2 Notes 1A and 2A, unless otherwise approved by the Engineer.

Where trench is greater than two (2) feet wide or if trench walls are sloped, the trench shall be backfilled with Crushed Miscellaneous Base or other material with a sand equivalent of 30 or greater and shall be select granular material free from organic matter per City of Torrance Standard Plan No. T116-2, Notes 1A and 2A. Imported backfill material shall be in accordance with 306-1.3.7. Backfill material shall be moistened to optimum moisture content and compacted to 95 percent of maximum density in the upper 3 feet and 90 percent below the upper 3 feet.

306-1.3.4 *(omitted from this specification)*

306-1.3.5 Jetted Bedding and Backfill Compaction Requirements.

Trench bedding and backfill densified through jetting shall be densified to a minimum relative compaction of 95 percent in the upper 3 feet of backfill and 90 percent below the upper 3 feet.

306-1.3.6 Mechanical Compaction Requirements.

Mechanically compacted trench backfill shall be densified to a minimum relative compaction of 95 percent in the upper 3 feet of backfill and 90 percent below the upper 3 feet.

306-1.3.9 Compaction Tests. Tests to determine materials compaction shall be performed by a separate CITY-hired subcontractor, at the CITY's expense, except that all tests which fail to meet the requirements of these Special Provisions shall be paid for by the Contractor. Maximum density shall be determined in accordance with ASTM D1557 method, modified to use five layers. Field density tests shall be performed in accordance with the test procedure specified in ASTM D1556.

306-1.4 Testing Pipelines.

306-1.4.1 General. Modify subparagraph g) as follows:

g) Water Pipelines – Testing and disinfection of potable water mains shall be in accordance with 306-1.4.7 of these Special Provisions.

306-15 Payment

306-15.1 General. Revise the first sentence of the first paragraph as follows:

Payment for pipe and conduit shall be considered as included in the prices bid for the various items of work and no additional compensation shall be made.

SECTION F

NOT USED

SECTION G
CSI SPECIFICATION

The following CSI formatted specifications are included to supplement the 2012 Standard Specifications for Public Works Construction "Greenbook" format specifications provided in Section E. Should a conflict occur between the provisions in the Greenbook specifications and these CSI specifications, refer to the Special Provisions Section 2-5.2 Precedence of Contract Documents on pages 28-29 for the order of precedence.

PROJECT MANUAL

TORRANCE TRANSIT
Park and Ride

Regional Terminal – Phase 1
Rough Grading

Torrance, CA

July 1, 2015

PREPARED BY

FRANK R. WEBB ARCHITECTS INC.
8607 Venice Boulevard
Los Angeles, CA 90034
(310) 559-4717
(310) 559-9174 FAX

PROJECT DIRECTORY

SITE ADDRESS	**TORRANCE TRANSIT PARK AND RIDE REGIONAL TERMINAL** 465 Crenshaw Boulevard Torrance, CA
CLIENT	**CITY OF TORRANCE** **DEPARTMENT OF PUBLIC WORKS** 20500 Madrona Avenue Torrance, CA 90503 (310) 781-6900 (310) 781- 6902 FAX
Ted Semaan, Engineering Manager	tsemaan@torranceca.gov
ARCHITECT	**FRANK WEBB ARCHITECTS** 8607 Venice Boulevard Los Angeles, CA 90034 (310) 559-4717 (310) 559-9174 FAX
Greg Coles, Principal-In-Charge	gcoles@teamfwa.com
Keith Fine, Project Architect	kfine@teamfwa.com
Ken Stein, Senior Designer	kstein@teamfwa.com
STRUCTURAL ENGINEER	**SAIFUL/BOUQUET INC.** 333 City Boulevard, Suite 710 Orange, CA 92868 (714) 464-1117 (714) 464-1490 FAX
Mehran Pourzanjani, Principal	mehran@saifulbouquet.com
Reynold Tang, Sr. Project Engineer	rtang@saifulbouquet.com
MECHANICAL, ELECTRICAL AND PLUMBING ENGINEERS	**DESIGN WEST ENGINEERING** 275 West Hospitality Lane, Suite 100 San Bernardino, CA 92408 (909) 890-3700 (909) 890-3770 FAX
Steve Johnson, Mechanical and Plumbing	sjohnson@designwesteng.com
Leo Maya, Electrical Dept. Head	lmaya@designwesteng.com
Jonathan Bianchet, Electrical PM	jbianchet@designwesteng.com

FIRE PROTECTION	**AON FIRE PROTECTION ENGINEERING, CORP.** 707 Wilshire Boulevard, Suite 2600 Los Angeles, CA 90017 (213) 630-2020 (213).630-2098 FAX
Christopher S. Prueher, Director	chris.prueher@aon.com
LOW VOLTAGE	**TRIAD CONSULTING & SYSTEM DESIGN GROUP** 2925 Mira Vista Way Corona, CA 92881 (949) 943-9422
Mike Ulwelling, Managing Partner	mulwelling@triadsdg.com
CIVIL ENGINEERS	**PSOMAS** 3111 Camino del Rio North, Suite 702 San Diego, CA 92108 (619) 961-2800
Augie Chang	achang@psomas.com
Jim Bliss, Project Manager	jbliss@psomas.com
LANDSCAPE ARCHITECT	**AHBE LANDSCAPE ARCHITECTS** 617 West Seventh Street, Suite 304 Los Angeles, CA 90017 (213) 694-3800
Brian Mitchell, Principal	bmitchell@ahbe.com
Calvin Abe, Principal	cabe@ahbe.com
David Powell, Project Manager	dpowell@ahbe.com
SPECIFICATIONS	**CHEW SPECIFICATIONS** 4381 Paseo Santa Catarina Newbury Park, CA 91320 (805) 375-0491
Marvin Chew	chewspec@verizon.net
LEED CONSULTANT	**AMBIENT ENERGY** 130 West 5th Avenue Denver, CO 80204 (303) 278-1532
Renee Azerbegi, President	renee@ambient-e.com
Elisabeth Newell, Project Manager	elisabeth@ambient-e.com
Avinash Gautam, Sustainability Consultant	avinash@ambient-e.com
Tracey Whaley	tracey@ambient-e.com

SIGNAGE CONSULTANT	**SKA DESIGN** 900 Palm Avenue South Pasadena, CA 91030 (626) 403-5870 (626) 403-5871 FAX
Jon Fimbres, Principal	jfimbres@skadesign.com
Jeff Bruce	jbruce@skadesign.com

GEOTECHNICAL	**DIAZ YOURMAN AND ASSOCIATES** 1616 East 17th Street Santa Ana, CA 92705-8509 (714).245-2920 (714) 245-2950 FAX
Matt Dennerline, Associate	matt@diazyourman.com

TABLE OF CONTENTS

DIVISION	SECTION TITLE
00 0101	PROJECT TITLE PAGE
00 0102	PROJECT DIRECTORY
00 1010	TABLE OF CONTENTS
00 3132	GEOTECHNICAL DATA

DIVISION 1 - GENERAL REQUIREMENTS

01 1100	SUMMARY OF WORK
01 2513	PRODUCTS AND SUBSTITUTIONS
01 2514	SUBSTITUTION REQUEST FORM
01 2613	CONTRACTOR'S REQUEST FOR INFORMATION
01 2973	SCHEDULE OF VALUES
01 2976	APPLICATION AND CERTIFICATE FOR PAYMENT
01 3113	PROJECT COORDINATION
01 3119	PROJECT MEETINGS
01 3216	NETWORK ANALYSIS
01 3231	CONSTRUCTION PHOTOGRAPHS
01 3323	SHOP DRAWINGS, PRODUCT DATA AND SAMPLES
01 4200	TESTING AND INSPECTION
01 4216	DEFINITIONS AND STANDARDS
01 4516	CONTRACTOR QUALITY CONTROL
01 5000	TEMPORARY FACILITIES AND CONTROLS
01 5813	TEMPORARY SITE SIGNAGE
01 6400	OWNER-FURNISHED PRODUCTS
01 6600	PRODUCT HANDLING
01 7123	FIELD ENGINEERING
01 7400	CLEANING
01 7419	CONSTRUCTION WASTE MANAGEMENT
01 7516	STARTING OF SYSTEMS
01 7700	PROJECT CLOSEOUT
01 7823	OPERATING AND MAINTENANCE MANUALS
01 7836	WARRANTIES AND BONDS
01 7837	WARRANTY FORM
01 7839	PROJECT RECORD DOCUMENTS
01 8113	SUSTAINABLE DESIGN REQUIREMENTS

DIVISIONS 2 – 30

PER PROJECT PLANS AS APPLICABLE

DIVISIONS 31

31 1000	SITE CLEARING
31 200	EARTH MOVING
31 2319	DEWATERING

DIVISIONS 32 – EXTERIOR IMPROVEMENTS

PER PROJECT PLANS AS APPLICABLE

DIVISIONS 33 – UTILITIES

33 4100 STORM UTILITY DRAINAGE PIPING
33 4600 SUBDRAINAGE

APPENDIX A – GEOTECHNICAL REPORT

END OF TABLE OF CONTENTS

TABLE OF CONTENTS

DIVISION	SECTION TITLE
00 0101	PROJECT TITLE PAGE
00 0102	PROJECT DIRECTORY
00 1010	TABLE OF CONTENTS
00 3132	GEOTECHNICAL DATA

DIVISION 1 - GENERAL REQUIREMENTS

01 1100	SUMMARY OF WORK
01 2513	PRODUCTS AND SUBSTITUTIONS
01 2514	SUBSTITUTION REQUEST FORM
01 2613	CONTRACTOR'S REQUEST FOR INFORMATION
01 2973	SCHEDULE OF VALUES
01 2976	APPLICATION AND CERTIFICATE FOR PAYMENT
01 3113	PROJECT COORDINATION
01 3119	PROJECT MEETINGS
01 3216	NETWORK ANALYSIS
01 3231	CONSTRUCTION PHOTOGRAPHS
01 3323	SHOP DRAWINGS, PRODUCT DATA AND SAMPLES
01 4200	TESTING AND INSPECTION
01 4216	DEFINITIONS AND STANDARDS
01 4516	CONTRACTOR QUALITY CONTROL
01 5000	TEMPORARY FACILITIES AND CONTROLS
01 5813	TEMPORARY SITE SIGNAGE
01 6400	OWNER-FURNISHED PRODUCTS
01 6600	PRODUCT HANDLING
01 7123	FIELD ENGINEERING
01 7400	CLEANING
01 7419	CONSTRUCTION WASTE MANAGEMENT
01 7516	STARTING OF SYSTEMS
01 7700	PROJECT CLOSEOUT
01 7823	OPERATING AND MAINTENANCE MANUALS
01 7836	WARRANTIES AND BONDS
01 7837	WARRANTY FORM
01 7839	PROJECT RECORD DOCUMENTS
01 8113	SUSTAINABLE DESIGN REQUIREMENTS

DIVISIONS 2 – 30

PER PROJECT PLANS AS APPLICABLE

DIVISIONS 31

31 1000	SITE CLEARING
31 200	EARTH MOVING
31 2319	DEWATERING

DIVISIONS 32 – EXTERIOR IMPROVEMENTS

PER PROJECT PLANS AS APPLICABLE

DIVISIONS 33 – UTILITIES

33 4100 STORM UTILITY DRAINAGE PIPING
33 4600 SUBDRAINAGE

APPENDIX A – GEOTECHNICAL REPORT

END OF TABLE OF CONTENTS

DOCUMENT 00 3132
GEOTECHNICAL DATA

A. A Geotechnical investigation was conducted at the site. The results of the investigation is found in the following document:

1. Title: Geotechnical Services for Advanced Conceptual Engineering, Torrance Transit Park and Ride Regional Terminal, 465 Crenshaw Boulevard, Torrance, Callfornia

2. Prepared by: Diaz-Yourman and Associates, 1616 East 17th Street, Santa Ana, California 92705, (714) 245-2920

3. Project No.: 2012-017

4. Date: June 13, 2013

B. A copy of the document is attached as Appendix A.

C. The document has been obtained only for the Architect's use in design. The Architect does not guarantee the information contained in the report.

D. Reports and log of borings are available for the Contractor's information but are not a warranty of subsurface conditions or continuity between soil borings.

END OF DOCUMENT

Z:\SPECS\public\(1) CSI WORKFILES\TORRANCE TRANSIT\(9) 07 07 14 - Bid\00 3132 mac Geotechnical.doc

SECTION 01 1100
SUMMARY OF WORK

PART 1 - GENERAL

1.1 SUMMARY

A. Section includes:

1. Description of the Work.

2. Work not in contract.

3. Contractor's use of premises.

4. Specification language and interpretation.

B. The Project consists of construction of a new Park and Ride, Bus Terminal for the City of Torrance, California, in compliance with the Contract Documents and Code requirements. The work of Phase 1 consist of the rough grading and of storm water drainage.

C. The project shall be designed and constructed as a "Green" building project for new construction that is environmentally sensitive, and uses state-of-the-art energy efficiency and sustainable building methods. Contractor is required to achieve a minimum "Gold" status as defined in the Leadership in Energy and Environmental Design (LEED) performance rating system for new construction v2009, established by U.S. Green Building Council (USGBC).

1.2 WORK NOT IN CONTRACT

A. The following will be provided by the City under separate contracts:

1. Tests and inspections specified to be provided by the City in the Contract Documents, unless otherwise stated elsewhere in the Project Specification or on the project Plans.

2. Items noted NIC (Not In Contract) on the Drawings or in the Specifications.

1.3 CONTRACTOR'S USE OF PREMISES

A. General:

1. During the construction period the Contractor shall have full use of the premises for construction operations, including use of the site for staging, field offices and storage sheds.

2. Only the City's right to perform construction operations with its own forces and to employ separate contractors on portions of the Project limits the Contractor's use of the premises and the site.

3. Allow City access to maintain and operate temporary and existing facilities.

4. Permit unimpeded access by fire fighting or rescue equipment.

5. Access to and egress from construction site shall be in strict conformance to prearranged routes approved by the City, with the understanding that curtailment of traffic or revision

of access routes may be required on short notice if the City's operations mandate such changes because of excessive noise, or problems with safety, service, or supply.

B. Partial City's occupancy: The City reserves the right to place and install equipment in areas of the Project prior to Substantial Completion provided that it doesn't interfere with the normal completion of the Work. This partial occupancy shall not constitute acceptance of the Work.

1.4 CITY (OWNER)-FURNISHED/CONTRACTOR-INSTALLED ITEMS (OFCI)

A. Submittals:

1. Obtain all necessary information from the City as to manufacturer, model, and type of each OFCI item to be furnished by the City.

2. Submit shop drawings, in compliance with the requirements of Section 01 3323, showing dimensioned rough-in diagrams for each OFCI item requiring utility connections, dimensioned locations of backing plates required in walls and partitions, and details of connections to supports for all OFCI items.

B. General: Contractor is responsible for correct and properly located installation of the OFCI items in compliance with the various manufacturers' specifications and instructions.

1. If a conflict occurs between manufacturer's instructions and actual field conditions, do not install the affected items until the conflict is resolved. No extra payment will be made to the Contractor for correction of improper installation of OFCI items when reasonably adequate data and instructions for installation were furnished by the City or various OFCI item manufacturers.

2. OFCI items will be delivered FOB jobsite. Contractor shall receive and unload the OFCI items, place in covered storage or enclosed building, and be responsible therefore after delivery. OFCI items that are damaged, abused, lost, or stolen while in Contractor's custody and control or damaged or defaced during installation shall be repaired, replaced, or otherwise made good to the City's satisfaction at the Contractor's expense.

3. Within 10 days after delivery of the OFCI items, open and uncrate the items for inspection. The City and Contractor shall inspect each item and maintain a written record of all damage, missing parts, and other defects disclosed, all of which will be made good by the City. After the inspection, Contractor shall be solely responsible for the equipment as specified above.

4. Contractor may request and receive from the City necessary additional information, such as specifications, templates, and like items from any of the manufacturers of the OFCI items. The Contractor may request a manufacturer's representative to supervise installation of any OFCI item, but at no extra cost to City.

C. Installation materials: Provide attachments, fittings, fasteners, connectors, and other ancillary materials required to make complete workable installations.

D. Installation: conform to each OFCI item manufacturer's specifications, templates, and information, including the necessary assembling of components or sub-assemblies.

E. Tests: Operate and test each operable OFCI item when installed and connected. If malfunction occurs through no fault of the Contractor, the City will make the defect good; otherwise, the Contractor shall make the necessary corrections so the item operates properly and as intended, at the Contractor's expense.

1.5 SPECIFICATION LANGUAGE AND INTERPRETATION

A. Gender: Whenever the context of the Contract Documents require, the neuter gender includes the feminine and masculine, the masculine gender includes the feminine and neuter, the singular number includes the plural, and the plural includes the singular.

B. Definitions: In addition to other definitions included in these Specifications, the following applies to the Work:

1. **Approved, approved equal**, **or equal,** mean as approved and accepted by the Architect and City as defined in the General Conditions and Section 01625 of the Specifications.

2. **As necessary** means essential to the completion of the Work.

3. **As required** means as required by the Contract Documents.

4. **As selected**, **as approved, as directed** or words of similar import mean as selected by, as approved by, or as accepted by the Architect. No implied meaning shall be interpreted to extend the Architect's responsibility into the Contractor's area of Contractor's supervision.

5. **As shown, as detailed, as indicated** and words of similar import mean as indicated on the Drawings.

6. **Basis of Design:** Product/material selection by the Architect.

7. **Building Department and Authorities Having Jurisdiction**: All agencies, individually or collectively, charged by statute with administration/enforcement of the requirements of the Building Code at the Project location.

8. **Computer Data Base** means the digital computer data issued by the Architect as a part of the Contract Documents, including 2-dimensional and 3-dimensional computer model, and drawing files in CAD format.

9. **Concealed** means embedded in masonry, concrete or other construction, installed within furred spaces, within a wall/partitions or above suspended ceilings, in trenches, in crawl spaces, or in enclosures.

10. **Division** means Division of these Specifications except where the obvious intent is the act or process of dividing. **Divisions** are groups of related Sections.

11. **Equipment** means a product with operational parts, whether motorized or manually operated, that requires service connections such as wiring or piping. This definition is in addition to definition in the General Conditions.

12. **Exposed** means not installed underground or concealed as defined above.

13. **Exterior** means a space that does not meet the definition for "interior" below.

14. **Fabricated** means items specifically assembled or made out of selected materials to meet individual design requirements for the Project.

15. **Factory Finished/Prefinished** means finished under controlled environmental conditions off site, and requiring no additional finish, except for touchup, at the Project site.

16. **Furnish** (materials) means to supply and deliver to the Project ready for installation and in operable condition.

17. **Include/including** means inclusion without limitation.

18. **Install** (services or labor) means to place in final position, complete, anchored, connected, and in operable condition.

19. **Installer** means the Contractor or another entity engaged by Contractor as an employee, Subcontractor, or Sub-subcontractor, to perform a particular construction operation, including installation, erection, application, and similar operations.

20. **Interior** means a space completely enclosed by walls, solid door(s), floor and ceiling.

21. **Manufactured** applies to standard units usually mass-produced.

22. **Manufacturer's directions, instructions, recommendations, specifications** means manufacturer's written directions, instruction, recommendations, specifications.

23. **Match** means providing a portion of the Work using the same product, technique, sequence, dimensions, finishes, color, texture, and degree of craftsmanship as (a) another portion of the Work, (b) existing conditions adjacent to the new portion of the Work, (c) as an approved sample, range of samples, or mockup or sample panel, or (d) as a control sample in the City's or Architect's possession.

24. **Materials** are products substantially shaped, cut, worked, mixed, finished, refined or otherwise fabricated, processed, or installed to form a part of the Work.

25. **Named products** are items identified by manufacturer's product name, including make or model designation, indicated in the manufacturer's published product literature current as of the date of the Contract Documents.

26. **Product(s)** means new materials, machinery, components, systems, fixtures, equipment, and terms of similar intent.

27. **Provide** means to supply, fabricate, deliver, place, and connect, complete in-place, ready for operation and use. When neither **furnish**, **install** nor **provide** is stated, **provide** is implied.

28. **Section** means Section of these Specifications, except where the obvious intent is one of several components, a piece. **Section** is usually a basic unit of Work.

29. **Shall** is mandatory.

30. **Similar** means a portion of the Work that matches the whole or part of another portion of the Work but has a different geometric configuration.

31. **Submit**, **submittal**, **submission** mean submit to the Architect for review, unless otherwise stated.

32. **Symmetrical** means a portion of the Work which matches adjacent work, or itself, but reversed about centerline(s) or the axis of a surface or a space.

C. Titling and arrangements:

1. Article, Paragraph, and subparagraph titles and other identifications of subject matter in the Specifications are intended as an aid in locating and recognizing various requirements in the beginning words of a sentence or where the title establishes the subject, the titles are subordinate to and do not define, limit, or otherwise restrict the Specification text.

2. Underlining, bolding or capitalizing of words in the text does not signify or mean that such words convey special or unusual meaning.

3. Specification text shall govern over titling and shall be understood to be and interpreted as a whole.

4. The order of articles, paragraphs, subparagraphs, and sub-subparagraphs in the Specifications text is defined by the sequence of indentations.

D. Interpretation:

1. Unless otherwise stated, technical words and abbreviations contained in the Contract Documents are used in accordance with commonly understood construction industry meanings; and non-technical words and abbreviations are used in accordance with their commonly understood meanings.

2. The Contract Documents may omit modifying words such as "all" and "any," and articles such as "the" and "an," but the fact that a modifier or an article is absent from one statement and appears in another is not intended to affect the interpretation of either statement.

3. The use of the word "including," when following any general statement, shall not be construed to limit such statement to specific items or matters, whether or not non-limiting language (such as "without limitation," "but not limited to," or words of similar import) is used with reference thereto, but rather shall be deemed to refer to all other items or matters that could reasonably fall within the broadest possible scope of such general statement.

4. Whenever the context so requires, the use of the singular number shall be deemed to include the plural and vice versa.

5. The captions and headings of the various subdivisions of the Contract Documents are intended only as a matter of reference and convenience and in no way define, limit, or prescribe the scope or intent of the Contract Documents or any subdivision thereof.

END OF SECTION

SECTION 01 2513
PRODUCTS AND SUBSTITUTIONS

PART 1 - GENERAL

1.1 SUMMARY

A. Section includes administrative and procedural requirements governing the Contractor's selection of products for use in the Project.

1.2 STANDARDS

A. Division 1 for applicability of industry standards to product specified.

1.3 GENERAL REQUIREMENTS

A. In agreeing to the terms and conditions of the Contract the Contractor has accepted the responsibility to schedule and verify that the specified products will be available when needed to comply with the accepted construction schedule, and to place orders for all required materials in timely manner to meet the accepted construction schedule, without delay in the Work.

1. Exceptions to the above are specified below.

B. It is the intent of the Contract Documents that products incorporated into the Project comply with the Contract Documents and the following:

1. New and undamaged.

2. Best of their respective kind.

3. Furnished in a timely manner, in ample quantities to facilitate proper and timely execution of the Work.

4. Of one manufacturer for each specific purpose, insofar as practicable.

5. Complete with all accessories, trim finish, safety guards and other devices and details needed for a complete installation and for the intended use and effect.

6. Wherever possible of types that have been produced and used successfully in similar situations on other projects.

1.4 CONTRACTOR'S OPTIONS

A. Product selection is governed by the Contract Documents and governing regulations. Procedures governing product selection include the following.

B. When both the specified process and the guarantee of the results are specified, the Contractor shall, if in its judgment the process may not produce the required result, offer for review an alternative process that he would guarantee.

C. Where catalog numbers and specific brands or trade names not followed by the designation "or equal" are used in conjunction with material or equipment required by the Specifications, no substitutions will be approved.

D. For products specified only by reference standards, select any product meeting standards, by any manufacturer.

E. Where more than one manufacturer's product is specified, the first-named product is the basis for the design used in the Work and the use of alternative-name manufacturers' products or substitutes may require modifications in that design.

1. If such alternatives are proposed by Contractor and are approved by the City and Architect, Contractor shall assume all costs required to make necessary revisions and modifications to the design, including additional costs to City for evaluation of revisions and modifications of the design resulting from the substitutions submitted by Contractor to Architect.

F. For products specified by naming one or more products, but indicating the option of selecting equivalent products by stating "or equal," "equal to," "or approved equal," "equivalent to" before or after specified product, submit a request, as required for substitution, for any product not specifically named.

G. Where Specifications require matching an established sample or samples of a given color range, the Architect's decision will be final on whether or not a proposed product matches satisfactorily.

1. Where no visual match can be satisfactorily made, in the Architect's opinion, even though the product selected conforms to other specified requirements, comply with provisions of the Contract Documents concerning "substitutions" for selection of a matching product in another product category, or for non-compliance with specified requirements. Architect may reject products based solely on lack of visual match.

2. Where specified product requirements include the phrase "as selected from manufacturer's palette..." or "as selected from manufacturer's standard colors, patterns, textures..." or similar wording, the Architect will select the color, pattern and texture from the product line selected.

1.5 SUBSTITUTIONS

A. The City and Architect will consider formal requests from the Contractor for substitution of products and processes in lieu of those specified only under one or more of the following circumstances:

1. When the Contractor ascertains that the specified product is not available. Proof shall be submitted that firm orders were placed in a timely manner or that the unavailability is due to strike, lockout, bankruptcy, discontinuance of manufacture, or an act of God.

2. When, in the opinion of the Contractor, the product or process will not fulfill the design intent.

B. Submit 5 copies of requests for substitutions; include in request:

1. Reason for request.

2. Complete data substantiating compliance of proposed substitution with Contract Documents.

3. For products:

   a. Product identification, including manufacturer's name and address.

   b. Manufacturer's literature, including product description, performance and test data, and reference standards.

   c. Samples.

   d. Name and address of similar projects on which product was used, and date of their installation.

4. For construction methods:

   a. Detailed description of proposed method.

   b. Drawings illustrating methods.

5. Itemized comparison of proposed substitution with product or method specified.

6. Data relating to changes in construction schedule.

7. Accurate cost data on proposed substitution in comparison with product or method specified.

8. Approval from Authorities having jurisdiction of product submitted for substitution. Approval may be in the form of a research report, test report or other form acceptable to the City and Architect.

9. Contractor shall document LEED credit impact for product substitutions.

C. In making request for substitution, Contractor represents:

1. Contractor has personally investigated proposed product or method, and determined that it is equal or superior in all respects to that specified.

2. Contractor will provide the same warranty for substitution of product or method specified.

3. Contractor will coordinate installation of accepted substitution into the Work, making such changes to adjacent materials as may be required for the Work to be complete in all respects without need for re-design of adjacent and supporting materials.

4. Contractor waives all claims for extension of time or time/sequence related consequences, and additional costs, that subsequently become apparent.

5. Cost data is complete and includes all related costs under Contractor's Contract, but excludes development and implementation costs which may be incurred by the City and Architect, and costs that affect separate contracts.

D. Substitutions will not be considered if:

1. They are indicated or implied on shop drawings or project data submittals without formal request submitted in compliance with the requirements of this Section. Make request for substitutions prior to the preparation of shop drawings, product data and samples; do not prepare shop drawings, product data and samples based on substitutions that have not been accepted by the City and Architect.

2. They are requested directly by a subcontractor or supplier.

3. Acceptance will require substantial revision of Contract Documents.

PART 2 - PRODUCTS

2.1 GENERAL

A. Certify that all materials incorporated into the Work are free from asbestos, radioactive waste, hazardous waste and any other material detrimental to human health, safety and conform to all codes for health, safety, ADA or environmental regulations and conform to the Specifications for the work.

B. Notify City, and request City's permission, before incorporating into the Project any materials specified by the Contract Documents which Contractor knows or has reason to know are contaminated by asbestos, radioactive waste, hazardous waste or any materials detrimental to human health and do not conform to all codes for health, safety, ADA or environmental regulations.

PART 3 - EXECUTION

NOT USED

END OF SECTION

• FILENAME \p Z:\SPECS\public\(1) CSI WORKFILES\TORRANCE TRANSIT\(10A) PHASE 1 - ROUGH GRADING - 09 01 15\01 2513 mac Product Subsitutions.doc•

SECTION 01 2514
SUBSTITUTION REQUEST FORM

Project: _____

Location: _____

_____

City's Representative's project number:_____

Substitution No.____*(number consecutively)*

CONTRACTOR'S REQUEST AND SUBSTANTIATION

1. This substitution is requested for the following reasons:

_____

_____

_____

_____

_____

2. Section of specifications to which this request applies is _____
3. In support of this request, product data for proposed substitution is attached, consisting of description of product or item, reference standards, and performance and test data, sample is attached, or sample will be sent if requested. (Cross out paragraphs not applicable).
4. Following is itemized comparison of original product or item specified with proposed substitution:

	Original	Substitution
Name or brand		
Manufacturer		
Catalog /Model No.		
Significant variations_____ _____ _____		

5. • Unit costs, for product or item only, • Product or item furnished and installed *(check one)* are as follows:

Original product or item: $_____ Per_____

Substitution: $_____ Per _____

6. Proposed credit to City for this substitution: $ _____

7. Effects of the proposed substitution on other parts of the work, or on separate contracts, are described as follows. This list is all inclusive:

_____

_____

_____

_____

_____

_____

8. The proposed substitution will • will not • (*check one*) affect dimensions shown on the drawings.

9. The undersigned, having thoroughly investigated the proposed substitution, hereby states that he **(a)** believes that it is equal or superior in all respects to the originally specified product except for the variations described in article 2, above, **(b)** will provide the same warranty or warranties as specified, **(c)** has included all cost data and cost implications of the proposed substitution, **(d)** will pay redesign and special inspection costs caused by the use of this substitution, **(e)** will reimburse separate contractors for additional costs caused by the use of this substitution, **(f)** will coordinate the incorporation of the proposed substitution in the work, **(g)** will modify other parts of the work as may be necessary and as approved by the City's Representative to make all parts of the work complete and functioning, **(h)** affirms that maintenance and service parts will be locally available for the proposed substitution, and **(h)** will waive future claims for added cost(s) to any party caused by the proposed substitution.

Contractor _____ Date _____

Contractor's signatory_____

Title _____

CITY'S REPRESENTATIVE'S REVIEW AND ACTION

• Furnish additional information in the following categories and resubmit:

_____

_____

_____

• Sign contractor's statement of conformance and resubmit.

- The proposed substitution is approved subject to the following conditions:

_____

_____

- A change order reflecting a deduction from the contract sum in the amount of
$_____ Will be issued.

City's Representative's signature_____

Date _____

END OF DOCUMENT

Z:\SPECS\public\(1) CSI WORKFILES\TORRANCE TRANSIT\(10A) PHASE 1 - ROUGH GRADING - 09 01 15\01 2514 mac Subsitution Request Form.doc

SECTION 01 2613
CONTRACTOR'S REQUEST FOR INFORMATION

PART 1 - GENERAL

1.1 SUMMARY

A. Section includes general requirements for Contractor's Requests for Information (RFI).

1. Procedure for shop drawings, product data and samples submittals are specified in accordance with Section 01 3323.

2. Procedure for substitutions are specified in accordance Section 01 2513.

1.2 CONTRACTOR'S REQUESTS FOR INFORMATION

A. Submit a Request for Information to the Architect when:

1. An unforeseen condition or constructibility question occurs.

2. Questions regarding information in the Contract Documents arise.

3. Information not found in the Contract Documents is required.

B. When possible, request such clarification either verbally or in writing.

1. When the RFI is answered at the Project meeting, number the RFI and enter the response into the meeting minutes.

2. When the urgency of the need, or the complexity of the item makes clarification at the next scheduled Project meeting impractical, prepare and submit a formal written RFI to the Architect without delay.

C. RFI received directly from a subcontractor will be returned to the Contractor unprocessed.

1.3 SUBMITTAL

A. Submit RFIs within a reasonable time frame so as not to interfere with, or impede the progress of the Work.

1. Keep the number of RFIs to a minimum.

2. When the number and frequency of RFIs submitted becomes unwieldy, the Architect may require the Contractor to abandon the process and submit requests as either submittals, substitutions, or requests for change.

3. When an answer to an RFI has an effect on cost or time, notify the Architect in accordance with the Contract Documents when the RFI is received. Notification shall occur prior to commencing such work, so that the change order process can be initiated.

B. When submitted in writing, submit the RFI as follows:

1. Submit a legible written request (FAX is acceptable) on a standard CSI or AIA preprinted form or another form approved in advance by the Architect. Include the following information:

a. Project name, as listed on the Contract Documents, Architect's project number or other identifying number, if any.

b. Date.

c. Name, address, telephone and FAX numbers of the Contractor.

d. Number and title of affected Specification Section or Sections.

e. Drawing numbers and detail references, as appropriate.

f. Clear, concise explanation of information or clarification requested.

g. Blank, lined spaces for Architect's written response.

C. Each page of each attachment to the RFI shall bear the RFI number in the lower right corner.

D. Number submitted RFI'S consecutively.

E. Sign and stamp all RFI forms. RFI from subcontractors or material suppliers shall be submitted through, and be reviewed by the Contractor prior to submittal to the Architect.

F. Unanswered RFI will be returned with a stamp or notation "NOT REVIEWED".

G. Prepare and maintain an RFI log. Update on a weekly basis. Log RFI number, brief description of content or subject discussed, date submitted, and date answered. Keep log current and furnish copy when so requested by the Architect.

H. Allow a minimum of 5 working days for review and response time; the response time will be increased if more information is required, when the RFI is submitted out-of-sequence, or if in the opinion of the Architect, more time is needed to answer the RFI.

1.4 QUALITY ASSURANCE

A. Carefully study the Contract Documents to assure that the requested information is not available therein.

1. RFI which requests information available in the Contract Documents may not be answered by the Architect.

2. Before submitting RFI to the Architect, verify that the information requested is not indicated in the Contract Documents, or cannot be determined from a careful review of same.

B. In all cases where a RFI is issued to request clarification of coordination issues, for example, pipe and duct routing, clearances, specific locations of work shown diagrammatically, and similar items, the Contractor shall fully lay-out a suggested solution using drawings or sketches

drawn to scale, and submit same with the RFI. RFI which fails to include a suggested solution will not be answered.

C. Do not use RFI for the following purpose:

1. To request approval of submittals.

2. To request approval of substitutions.

3. To request changes to the Contract Documents and to confirm action taken by the Contractor for requested changes/substitutions to the Contract Documents.

D. If the Contractor believes that a clarification by the Architect may result in a change in Contract price, the Contractor shall not proceed with the work indicated by the RFI until a Change Order or other acceptable tracking device is prepared and approved.

1. If the Contractor believes that a clarification by the Architect results in additional cost, the Contractor shall identify in the RFI the basis of the Contractor's bid as it relates to the RFI.

2. Answered RFI shall not be construed as approval to perform extra work.

END OF SECTION

• FILENAME \p Z:\SPECS\public\(1) CSI WORKFILES\TORRANCE TRANSIT\(10A) PHASE 1 - ROUGH GRADING - 09 01 15\01 2613 mac Contractor Request for Info.doc•

SECTION 01 2973
SCHEDULE OF VALUES

PART 1 - GENERAL

1.1 SUMMARY

A. Section includes:

1. Procedures for submitting schedule of values.

B. Submit a schedule of values to the Architect at least 10 days prior to submitting first application for payment.

C. Support values given with data substantiating their correctness upon Architect's request.

D. Use schedule of values for Contractor's application for payment.

1.2 FORM OF SUBMITTAL

A. The form of Application for Payment shall be AIA Document G702 "Application and Certification for Payment" supported by AIA Document G703 "Continuation Sheet," or equivalent format acceptable to the Architect.

B. Use Table of Contents of the Specifications for format for listing costs of work specified in Specification Divisions 1 through 48.

C. Identify each line item with number and title as listed in the index of these Specifications.

1.3 PREPARING SCHEDULE OF VALUES

A. Itemize separate line item cost for each of the following general cost items (if required):

1. Performance and payment bonds.

2. Field supervision and layout.

3. Temporary facilities and controls.

B. Itemize separate line item cost for work required by each Section of Specifications.

C. Break down installed costs into:

1. Delivered cost of product, with taxes paid.

2. Total installed cost, with overhead and profit.

D. For each line item which has installed value of more than $20,000.00, break down costs to list major products or operations under each item.

E. Round off figures to nearest dollar.

1.4 REVIEW AND RESUBMITTAL

A. After review by Architect, revise and resubmit schedule (and schedule of material values) as required.

B. Resubmit revised schedule in same manner.

END OF SECTION

• FILENAME \p Z:\SPECS\public\(1) CSI WORKFILES\TORRANCE TRANSIT\(10A) PHASE 1 - ROUGH GRADING - 09 01 15\01 2973 mac Schedule of Values.doc•

SECTION 01 2976
APPLICATION AND CERTIFICATE FOR PAYMENT

PART 1 - GENERAL

1.1 SUMMARY

A. Section includes:

1. This Section specifies administrative and procedural requirements governing applications for payment.

B. Related work:

1. Sections 01 3216 and 01 3323 for construction and submittal schedule.

1.2 SCHEDULE OF VALUES

A. Coordinate preparation of the schedule of values with preparation of the Contractor's construction schedule. Refer to Section 01 2973 for Schedule of Values.

B. General:

1. Correlate line items in the schedule of values with other required administrative schedules and forms, including:

a. Construction schedule.

b. Application for payment form.

c. List of subcontractors.

d. Schedule of allowances.

e. Schedule of alternates.

f. List of products.

g. List of principal suppliers and fabricators.

h. Schedule of submittals.

2. Submit the schedule of values to the Architect at the earliest feasible date, but in no case later than 7 days before the date scheduled for submittal of the initial application for payment.

3. Where the Work is separated into phases that require separately phased payments, provide sub-schedules showing values correlated with each phase of payment.

C. Format and content: Use the Project Manual table of contents as a guide to establish the format for the schedule of values.

1. Include the following on the schedule of values:

    a. Project name and location.

    b. Contractor's name and address.

    c. Project number.

    d. Architect's name.

    e. Date of submittal.

2. Arrange the schedule of values in a tabular form with separate columns to indicate the following for each item listed:

    a. Generic name.

    b. Related Specification Section.

    c. Name of subcontractor.

    d. Name of manufacturer or fabricator.

    e. Name of supplier.

    f. Change Orders (numbers) that have affected value.

    g. Dollar value.

    h. Percentage of Contract Sum to the nearest 1/100 percent, adjusted to total 100 percent.

3. Provide a breakdown of the Contract sum in sufficient detail to facilitate continued evaluation of applications for payment and progress reports. Break principal subcontract amounts down into several line items.

4. Round amounts off to the nearest whole dollar. The total shall equal the Contract Sum.

5. For each part of the Work where an application for payment may include materials or equipment, purchased or fabricated and stored, but not yet installed, provide separate line items on the schedule of values for initial cost of the materials, for each subsequent stage of completion, and for total installed value of that part of the Work.

6. For unit cost allowances, show line item value of unit cost allowances as a product of unit cost times measured quantity as estimated from the best indication in the Contract Documents.

7. For margins of cost, show line items for indirect costs, and margins on actual costs, only to the extent that such items will be listed individually in applications for payment. Each item in the schedule of values and applications for payment shall be complete including its total cost and proportionate share of general overhead and profit margin.

a. At the Contractor's option, temporary facilities and other major cost items that are not direct cost of actual work-in-place may be shown as separate line items in the schedule of values or distributed as general overhead expense.

8. Update and resubmit the schedule of values when Change Orders or Construction Change Directives result in a change in the Contract sum.

1.3 APPLICATIONS FOR PAYMENT

A. General: Each application for payment shall be consistent with previous applications and payments as certified by the Architect and paid for by the City.

1. The initial application for payment, the application for payment at time of Substantial Completion, and the final application for payment involve additional requirements.

2. Application for initial payment to be linked to LEED Action Plan as described in 01 8113, Sustainable Design Requirements and LEED.

3. Progress payment application to be linked to LEED Progress Reports as described in 01 8113, Sustainable Design Requirements.

4. Final payment application to be linked to LEED-Online Documentation Submittals as described in 01 8113, Sustainable Design Requirements.

B. Payment application times: Unless otherwise indicated in the Agreement, the date for each progress payment is the 15th day of each month. The period of construction work covered by each application for payment is the period ending 15 days prior to the date for each progress payment and starting the day following the end of the preceding period.

C. Payment application forms: Unless forms are provided by the City, use AIA Document G702 and Continuation Sheets G703 as the form for application for payment.

D. Application preparation: Complete every entry on the form, including notarization and execution by person authorized to sign legal documents on behalf of the City. Incomplete applications will be returned without action.

1. Entries shall match data on the schedule of values and Contractor's construction schedule. Use updated schedules if revisions have been made.

2. Include amounts of Change Orders and Construction Change Directives issued prior to the last day of the construction period covered by the application.

E. Transmittal:

1. Submit 3 executed copies of each application for payment to the Architect so that they are received within 24 hours; one copy shall be complete, including waivers of lien and similar attachments, when required.

2. Transmit each copy with a transmittal form listing attachments, and recording appropriate information related to the application in a manner acceptable to the Architect.

F. Waivers of mechanics lien: With each application for payment, submit waivers of mechanics lien from every entity who may lawfully be entitled to file a mechanics lien arising out of the Contract, and related to the work covered by the payment.

1. Submit partial waivers on each item for the amount requested, prior to deduction for retainage, on each item.

2. When an application shows completion of an item, submit final or full waivers.

3. The City reserves the right to designate which entities involved in the Work must submit waivers.

4. Waiver delays:

   a. Submit each application for payment with the Contractor's waiver of mechanics lien for the period of construction covered by the application.

   b. Submit final application for payment with or preceded by final waivers from every entity involved with performance of work covered by the application who could lawfully be entitled to a lien.

5. Submit waivers of lien on forms, and executed in a manner, acceptable to City.

G. Initial application for payment: Administrative actions and submittals that must precede or coincide with submittal of the first application for payment include the following.

1. List of subcontractors.

2. List of principal suppliers and fabricators.

3. Schedule of values.

4. Contractor's construction schedule (preliminary if not final).

5. Schedule of principal products.

6. Schedule of unit prices, when applicable.

7. Submittal schedule (preliminary if not final).

8. List of Contractor's staff assignments.

9. List of Contractor's principal consultants.

10. Copies of building permits.

11. Copies of authorizations and licenses from governing authorities for performance of the Work.

12. Initial progress report.

13. Report of pre-construction meeting.

14. Certificates of insurance and insurance policies.

15. Performance and payment bonds, if required.

16. Data needed to acquire City's insurance.

17. Initial settlement survey and damage report, if required.

H. Application for payment at Substantial Completion: Following issuance of the Certificate of Substantial Completion, submit an application for payment reflecting any Certificates of Partial Substantial Completion issued previously for City occupancy of designated portions of the Work.

I. Administrative actions and submittals that shall precede or coincide with the application submitted for Substantial Completion, include the following:

1. Occupancy permits and similar approvals.

2. Warranties (guarantees) and maintenance agreements.

3. Test/adjust/balance records.

4. Maintenance instructions.

5. Meter readings.

6. Start-up performance reports.

7. Change-over information related to City's occupancy, use, operation and maintenance.

8. Final cleaning.

9. Application for reduction of retainage, and consent of surety.

10. Advice on shifting insurance coverages.

11. List of incomplete work, recognized as exceptions to Architect's Certificate of Substantial Completion.

J. Final payment application: Administrative actions and submittals which must precede or coincide with submittal of the final payment application for payment include the following.

1. Completion of Project closeout requirements.

2. Completion of items specified for completion after Substantial Completion.

3. Assurance that unsettled claims will be settled.

4. Assurance that work not complete and accepted will be completed without undue delay.

5. Transmittal of required Project construction records to City.

6. Certified property survey.

7. Proof that taxes, fees and similar obligations have been paid.

8. Removal of temporary facilities and services.

9. Removal of surplus materials, rubbish and similar elements.

10. Change of door locks to City's access.

END OF SECTION

• FILENAME \p Z:\SPECS\public\(1) CSI WORKFILES\TORRANCE TRANSIT\(10A) PHASE 1 - ROUGH GRADING - 09 01 15\01 2976 mac Application and Certificate for Payment.doc•

SECTION 01 3113
PROJECT COORDINATION

PART 1 - GENERAL

1.1 SUMMARY

A. Section includes Contractor's responsibility for Project coordination.

1.2 DUTIES OF CONTRACTOR - GENERAL

A. Coordinate the work of all subcontractors.

B. Establish lines of authority and communication. Schedule and conduct progress meetings between City's Representative, Architect and subcontractors.

C. Verify that specified cleaning is done.

D. Verify that subcontractors have obtained all permits required for inspections and temporary facilities.

E. Administer processing of submittals (shop drawings, product data, samples, etc.).

F. Assemble documentation for handling claims and disputes.

1.3 PROJECT MANAGEMENT AND ENVIRONMENTAL COORDINATION

A. Contractor's Environmental Manager: Designate an on-site party responsible for overseeing the Contractor's conformance to environmental and LEED goals for the project and implementing procedures for environmental protection.

1. Qualifications: Minimum 3 years construction experience on projects of similar size and scope AND experience on another LEED project and a LEED Accredited Professional.

2. Responsibilities shall include:

a. Verification of compliance with all applicable federal, state, and local environmental laws and regulations in place where the project is located, including maintaining required documentation.

b. Implementation of the Construction Waste Management Plan.

c. Implementation of the IAQ Management Plan.

d. Training for contractor personnel in accordance with their position requirements.

e. Monitoring and documentation of environmental procedures.

3. Contractor's Environmental Training Program: Contractor shall provide environmental training for workers performing work on the project site. Training shall include the following:

a. Overview of environmental goals related to the Project.

b. Review of site specific procedures and management plans.

1.4 CONSTRUCTION SCHEDULES

A. Prepare detailed schedule of operations of all subcontractors on the Project.

B. Monitor schedules as Work progresses:

1. Identify potential variances between scheduled and probable completion dates.

2. Recommend adjustments in schedules to meet required completion date.

3. Provide summary reports of each monitoring.

4. Document all changes in schedule.

C. Observe Work to monitor compliance with schedule.

1. Verify that labor and equipment are adequate for the work being performed, and to maintain the schedule.

2. Verify that product deliveries are adequate to maintain schedule.

3. Report non-compliance to Architect, with recommendation for remedy.

1.5 TEMPORARY FACILITIES

A. Allocate space for temporary structures furnished by each subcontractor.

B. Monitor use of temporary facilities.

C. Verify that adequate services are provided to comply with requirements for work and climatic conditions.

D. Verify proper maintenance and operation of temporary facilities.

E. Administer traffic and parking controls.

1.6 COST CONTROL

A. Maintain cost accounting records for authorized work performed under unit costs, actual costs for labor and materials, and other work requiring accounting records.

B. Develop and implement procedure for reviewing and processing applications for progress and final payments. Submit recommendations to Architect for certification to City for payment.

1.7 CHANGES

A. Review subcontractor's requests for changes and for substitutions; submit recommendations to Architect.

B. Process change orders.

1.8 INTERPRETATIONS OF CONTRACT DOCUMENTS

A. Consult with Architect to obtain interpretations.

B. Assist in resolution of questions that arise.

C. Transmit written interpretations to concerned parties.

1.9 COORDINATION DRAWINGS

A. For the work listed below, prepare coordination shop drawings using the latest version of AutoCAD or equivalent software. Each element of the work listed shall be included in its own layer (or layers) within the electronic file. Provide diskettes with these files for use by the Architect when so requested.

1. HVAC.

2. Plumbing.

3. Lighting.

4. Fire protection.

5. Fire alarm.

6. Power.

7. Security.

8. Telecommunications (phone and data).

9. Structure.

B. Coordination drawings:

1. Employ a coordination engineer who shall be responsible for HVAC, plumbing, fire protection, and electrical work and shall bear full responsibility for the correctness of the coordination drawings submitted to the Architect for review.

2. Prepare transparencies, using AutoCAD, as the basis for coordination of work between HVAC, plumbing, fire protection, process, lighting, special system, and electrical power work. The work of each of the referenced trades shall be incorporated into a single composite set of transparencies, and shall clearly indicate all interfaces, clearances, and related construction.

3. Prepare coordination drawings from the electronic files to a minimum scale of 1/4 -inch to a foot (1:48) on tracing medium of the same size as the Contract Drawings. With these layouts, coordinate the work of other trades. Such detailed work shall be clearly identified on the coordination drawings as to the area to which it applies. Clearly show the work and its relation to the work of other trades, before commencing shop fabrication or erection in the field.

a. Coordination drawings shall show information necessary to demonstrate that the work can be installed without interferences with other elements including, but not limited to, structural elements, finished construction, etc.

b. Coordination drawings shall indicate hanger and anchorage locations.

c. Architectural CAD backgrounds will be made available to the Contractor to facilitate the coordination drawings. However, this is intended to be a convenience only and the Contractor shall not rely on the accuracy of information contained within the electronic files. Contractor will not be provided with the Architectural reflected ceiling plans, MEP drawings, or other Contract Drawings.

d. The Contractor shall not scan images of the Contract Documents for use in producing the coordination drawings.

e. Work shall not commence for the systems documented in the coordination drawings without submittal of fully executed coordination drawings.

4. Prepare layout drawings of system and assemblies, including, but not limited to, plumbing, heating and cooling piping, sprinklers, standpipes, ductwork, special purpose systems, lighting systems, control systems, and electrical systems.

5. Provide layout drawings of the mechanical rooms, electrical equipment rooms, closets, busways, and underfloor conduits. Include dimensioned plans drawn to scale. Coordinate work with that of all trades/subcontracts.

6. Show elevations and sections indicating locations of equipment, piping, ductwork, drains, controls, conduits, and other items with reference to columns, walls, slabs, beams, and to components of other systems and assemblies.

C. Revisions: Revise and update shop drawing layouts for each trade in accordance with the coordination drawings prior to submittal to the Architect.

D. Submittal:

1. Submit a copy of the mechanical and electrical coordination drawings to the Architect no later than time of submittal of the individual trades' shop drawing submittals. The individual trades' shop drawings will not be reviewed without submission of the coordination drawings with a completely executed sign-off table.

2. The Contractor and each subcontractor for the above work shall certify by endorsement on the coordination drawings, that they represent a complete and accurate record of the work to be executed.

3. After mechanical/electrical coordination drawings are completed, subcontractors shall date and sign each coordination drawing with the understanding that the signature signifies that the work shown thereupon has been fully coordinated and is ready for construction. Coordination sign-off table shall read as follows:

COORDINATION SIGN-OFF TABLE			
Trade	**Company Name**	**Date**	**Signature**
Piping			
Plumbing			
Fire Protection			
Electrical			
HVAC			
General Contractor			

COORDINATION SIGN-OFF TABLE			
Note: Subcontractors warrant and represent that they have prepared this submittal in compliance with the Contract Drawings and have coordinated the details and information contained in this submittal with all adjacent work and all related trades and plans.			

1.10 MAINTAIN THE FOLLOWING AT SITE

A. Records:

1. Daily log of progress of work, available to Architect and City.

2. Contract Drawings and Specifications.

3. Contracts.

4. Purchases.

5. Materials and equipment records.

6. Applicable handbooks, codes and standards.

7. Shop drawing log.

8. Record documents.

9. Permits and test reports.

B. Deliver records to City at completion of Project.

C. Create LEED Log Binder. Submit materials tracking spreadsheets as described in 01 8113 quarterly and submit photos as described in 01 3233.

1.11 START-UP

A. Direct the check out of utilities, systems and equipment.

B. Assist in initial start-up and testing.

C. Assist, and instruct when specified, the City's designated personnel in the operation, emergency repair and operation, and maintenance of utilities, systems and equipment.

D. Record dates of start of operation of systems and equipment.

E. Submit to City written notice of beginning of warranty period for equipment put into service.

1.12 SUBSTANTIAL COMPLETION

A. Upon determination of Substantial Completion of the Work, or portion thereof, prepare a list of incomplete or unsatisfactory items for the Architect's review.

B. Prior to Architect's certification of date of Substantial Completion, promptly make corrections noted on the list, and other corrections determined by the Architect, and complete defective and incomplete work.

1.13 FINAL COMPLETION

A. Upon determination that the Work is finally complete, submit written notice to Architect and City that Work is ready for final inspection and secure and transmit required closeout submittals to Architect.

B. Turn over to City items identified as "closeout submittals" in Divisions 2 through 48 of these Specifications and in Section 01 7700.

END OF SECTION

• FILENAME \p Z:\SPECS\public\(1) CSI WORKFILES\TORRANCE TRANSIT\(10A) PHASE 1 - ROUGH GRADING - 09 01 15\01 3113 mac Project Coordination.doc•

SECTION 01 3119
PROJECT MEETINGS

PART 1 - GENERAL

1.1 SUMMARY

A. Section includes:

1. Scheduling and administration of progress meetings as follows:

2. Make arrangements for meetings. Prepare agendas and preside at meetings.

3. Distribute written notice of agenda of regular scheduled and called meetings a minimum of 4 days in advance of meeting date.

4. Record minutes, include significant proceedings and decisions.

5. Distribute copies of minutes to participants, within 4 days after meetings. Furnish copy of minutes to the Architect.

1.2 PRE-CONSTRUCTION MEETINGS

A. Schedule a meeting within 15 days after date of Notice to Proceed. In attendance shall be the Contractor, City and Architect. As a minimum, preparation of the initial schedule, critical work sequence, and review and updating procedures shall be on the agenda.

B. Schedule a meeting within 15 days after date of Notice to Proceed.

1. Attendance:

a. City.

b. Architect and its consultants.

c. Major subcontractors.

2. Minimum agenda:

a. Distribute and discuss list of major subcontractors, and construction schedule updating frequency.

b. Insurance.

c. Critical work sequencing and preliminary scheduling as specified in Section 01 3216.

d. Long lead material items.

e. Designation of responsible personnel.

f. Procedure for progress payments, including handling of retainage, payments for materials on hand, and withholding of payment until shop drawings review is complete.

g. Payroll records, when needed to be submitted to the City.

h. Restrictions to site use and access.

i. Temporary facilities.

j. Testing and inspections.

k. Surveys and layout.

l. City-furnished equipment.

m. Public relations; policies regarding statements to media, and other public related activities.

n. Proceeding of field decisions, Bulletins, and Change Orders.

o. Adequacy of distribution of Contract Documents.

p. Shop drawing log. Submittal schedule of shop drawings, product data and samples.

q. Schedule of mockups.

r. LEED

C. RFI log. Submittal of RFI.

a. Procedures for maintaining project record documents.

b. Use of premises, parking, office and storage areas.

c. Major equipment deliveries and priorities.

d. Safety and first-aid procedures, security procedures, and housekeeping procedures.

D. Submittals:

1. Preliminary scheduling.

1.3 PROGRESS MEETINGS

A. Thereafter schedule regular weekly progress meetings as mutually agreed.

B. Meetings shall be held as job progress dictates, at construction office, or as indicated in notice.

C. Attendance:

1. General Contractor project manager.

2. General Contractor's jobsite superintendent.

3. City's Representative.

4. Architect and its consultants, as pertinent to agenda.

5. Subcontractors, as pertinent to agenda.

D. Minimum agenda:

1. Review, approve minutes of previous meeting.

2. Review work progress since last meeting.

3. Note field observations, problems and decisions.

4. Identify problems which impede planned progress.

5. Review any off-site fabrication problems.

6. Develop corrective measures and procedures to regain planned schedule.

7. Revise construction schedule as indicated.

8. Plan progress during next work period.

9. Review submittal schedules, expedite as required to maintain schedule.

10. Maintenance of quality standards.

11. Review any changes proposed for effect on construction schedule and completion date.

12. Complete other current business.

13. LEED coordination meetings shall be held every 2 weeks minimum for the first half of the construction period, then once per month for the second half of the construction period.

14. LEED Requirements: Review status of Construction Waste Management, Construction IAQ Management Plan, LEED Submittals, LEED Scorecard, and Commissioning progress.

1.4 REVISIONS TO PUBLISHED MINUTES

A. Unless published minutes are challenged in writing prior to the next regularly scheduled progress meeting, they will be accepted as properly stating the activities and decisions of the meeting.

B. Persons challenging published minutes shall reproduce and distribute copies of the challenge to all indicated recipients of the particular set of minutes.

C. Challenge to minutes shall be settled as priority portions of "old business" at the next regularly scheduled meeting.

END OF SECTION

• FILENAME \p Z:\SPECS\public\(1) CSI WORKFILES\TORRANCE TRANSIT\(10A) PHASE 1 - ROUGH GRADING - 09 01 15\01 3119 mac Project Meetings.doc•

SECTION 01 3216
NETWORK ANALYSIS

PART 1 - GENERAL

1.1 SUMMARY

A. Section includes:

1. Prepare network analysis system using the Critical Path Method to assure adequate planning and execution of the Work so that the Work is completed within the respective number of calendar days allotted in the Contract, and to assist the Architect in appraising the feasibility of the proposed schedule and evaluating the Progress of the Work.

1.2 QUALITY ASSURANCE

A. Network analyst's qualifications: Individuals(s) thoroughly trained and experienced in compiling construction schedule data and analyzing by use of the Critical Path Method.

B. Reference standards: Perform all data preparation, analysis, charting, and updating in compliance with pertinent recommendations of the current edition of "CPM In Construction" a manual of the Associated General Contractors.

C. Submittal and resubmittal procedures: In accordance with Section 01 3323.

D. Preliminary network analysis: Within 10 days after receipt of the Notice to Proceed, submit 4 prints and electronic copies of a preliminary network analysis prepared in compliance with Article 1.3 below.

E. Network analysis: Within 60 days after receipt of Notice to Proceed, submit one reproducible and 4 prints of the network analysis prepared in compliance with Article 1.3 below.

F. Revised analyses: Within 10 days after receipt of the Architect's review comments, submit 4 prints and electronic copies of the network analysis revised in compliance with those comments.

G. Periodic reports: On the first working day of each month following submittal of the above revised analysis, submit 4 prints of analysis and 7 prints of sort number 3 (see paragraph 1.3, C, 3 below), updated in compliance with this Section.

1.3 NETWORK ANALYSIS

A. Diagram: Graphically show the order and interdependence of all activities necessary to complete the Work, and the sequence in which each such activity is to be accomplished, as planned by the Contractor and his project field superintendent in coordination with all subcontractors whose work is shown on the diagram. Activities shown on the diagram shall include, but are not necessarily limited to the following.

1. Project mobilization.

2. Submittal and approval of product data, shop drawings and samples.

3. Procurement of equipment and critical materials.

4. Projected delivery dates of all materials.

5. Activities of all Contractors.

6. Fabrication of special material and equipment, and their installation and testing.

7. Projected dates of required inspections and approvals.

8. Final cleanup.

9. Final inspection and testing.

10. All activities of the City which may affect progress and/or affect required dates for completion of all or part of the Work.

B. The detail of information shall be such that duration times of activities will normally range from 1 - 15 days.

1. The selection and number of activities shall be subject to the Architect's approval. Show on the diagram, as a minimum for each activity, preceding and following event numbers, description of each activity, cost, and activity duration in calendar days.

2. Submit diagram on a sheet size 30 -inch high x width required.

C. Mathematical analysis: Furnish the mathematical analysis of the network diagram by computer printout, including a tabulation of each activity. Show the following information as a minimum for each activity.

1. Preceding and following event numbers.

2. Activity description.

3. Estimated duration of activities.

4. Earliest start date (by calendar date).

5. Earliest finish date (by calendar date).

6. Latest start date (by calendar date).

7. Latest finish date (by calendar date).

8. Slack or float (in calendar day).

9. Monetary value of the activity.

10. Percentage of activity completed.

11. Contractor's earnings based on portion of activity completed.

D. The means used in taking the mathematical computation shall be capable of compiling the total value of completed and partially completed activities and be capable of accepting modifications approved for time and logic adjustments.

E. Computer printout: In the computer printout, list the activities in sorts as follows.

1. By the preceding event number from lowest to highest and then in the order of the following event number.

2. By the amount of float then in order of preceding event numbers, and then in order of succeeding event numbers.

3. In order of preceding event numbers, and then in order of succeeding event numbers. Show the total dollar amount and dollars spent to date for each activity.

4. All other sorts requested by the Architect.

F. The schedule shall be coordinated with the Schedule of Values per Section 01 2973.

PART 2 - PRODUCTS

NOT USED

PART 3 - EXECUTION

3.1 PERIODIC REPORTS

A. Contents:

1. Report actual progress by updating the mathematical analysis.

2. Note on the summary network or clearly show on a revised issue of affected portions of the detailed network revisions causing changes in the detailed network.

3. Revise the summary network as necessary for clarity.

4. Activities or portions of activities completed during the reporting period and their total value.

5. State the percentage of the Work actually completed and scheduled as of the report date and the progress along the critical path in terms of days ahead of, or behind the allowable dates.

6. If the Project is behind schedule, also report progress along other paths with negative slack.

7. Include a narrative report which shall, but is not necessarily limited to; a description of the problem areas, current and anticipated delaying factors and their impact; and an explanation of corrective actions taken or proposed.

8. Show the date of latest revision.

B. Submittal: Submit in accordance with paragraph above.

END OF SECTION

• FILENAME \p Z:\SPECS\public\(1) CSI WORKFILES\TORRANCE TRANSIT\(10A) PHASE 1 - ROUGH GRADING - 09 01 15\01 3216 mac Scheduling Critical Path.doc•

SECTION 01 3231
CONSTRUCTION PHOTOGRAPHS

PART 1 - GENERAL

1.1 SUMMARY

A. Section includes:

1. Requirements for photographs to be taken before and during the construction of the Project.

2. Web-based construction photographic documentation.

1.2 SUBMITTALS

A. E-mail photos to the City and Architect within 3 days after capturing photographs.

B. Submit time-lapse sequence video recordings simultaneously with recording.

1. Submit time-lapse sequence video recordings by posting to Web-based photographic documentation service provider's Web site and monthly on digital video disc.

2. Identification: For each recording, provide the following information:

a. Name of Project.

b. Name and contact information for photographer.

c. Name of Project Manager.

d. Name of Contractor.

e. Date and time video recording was recorded.

f. Description of vantage point, indicating location, direction (by compass point), and elevation or story of construction.

g. Weather conditions at time of recording.

1.3 QUALITY ASSURANCE

A. Web-based photographic documentation service provider: A firm specializing in providing photographic equipment, Web-based software, and related services for construction projects, with record of providing satisfactory services similar to those required for Project.

PART 2 - PRODUCTS

2.1 PHOTOGRAPHIC MEDIA

A. Digital images: Provide images in JPG format, produced by a digital camera with minimum sensor size of 12 megapixels.

2.2 WEB-BASED PHOTOGRAPHIC DOCUMENTATION

A. Project Camera: Provide fixed exterior camera installation, mounted to provide unobstructed view of construction site from location approved by Architect.

1. Provide 2 fixed-location cameras, with the following characteristics:

a. Static view.

b. Capable of producing minimum 12 megapixel pictures.

c. Provide power supply, active high-speed data connection to service provider's network, and static public IP address for each camera.

2. Camera mounting locations: To be selected by Architect.

B. Web-based image access: Provide current public access.

PART 3 - EXAMINATION

3.1 GENERAL

A. Provide time-dated construction photographs taken on first day of each month and at following stages of construction for each building, when they do not coincide with the first day of the month.

1. Prior to beginning any work at the site.

2. After site clearing has been completed.

3. When footings and foundations are completed.

4. When structure steel framing is complete.

5. When each type of waterproofing and roofing is to be installed and when complete.

6. Promptly after damage that may result in loss or liability occurs.

7. At completion of **all** construction work and when building is first occupied.

B. At each specified time during construction, take photographs from 6 different views. Views will be determined, or must be approved in advance by the Architect.

C. Take color photographs with a digital camera at a resolution of not less than 8 mega pixels.

D. E-mail photographs as specified above.

E. Each utility at point where disconnection occurs.

F. Contractor shall take photographs of the erosion and sedimentation control (ESC) measures implemented including any corrective action taken. Photographs shall be taken on at least 3 different occasions, equally spaced over the site work period. Photographs must be taken at least once monthly at a minimum.

G. Contractor shall take a total of 18 photographs (6 photographs at three different times during the construction process) demonstrating compliance with all five SMACNA Control Measures from the Indoor Air Quality Management Plan as outlined in Section 01 8113, Sustainable Design requirements. Photographs indicate the specific SMACNA Control Measure documented.

H. Contractor shall take photographs of the Construction Waste Management program (recycling bins showing sorted waste).

I. Provide documentation for environmental procedures as specified herein and in accordance with approved Construction Waste Management Plan, IAQ Management Plan, and Erosion and Sedimentation Control.

3.2 WEB-BASED CONSTRUCTION PHOTOGRAPHIC DOCUMENTATION

A. Live Streaming Construction Site Images: Provide Web-accessible image of current site image from fixed location cameras, updated at 1 minute intervals during daytime operation.

B. Time-Lapse Sequence Construction Site Recordings: Provide video recording from a fixed-location camera to show status of construction and progress.

1. Frequency: Record one frame of video recording every 15 minutes of work hours, from same vantage point each time, to create a time-lapse sequence of construction activities.

2. Timer: Provide timer to automatically start and stop video recorder so recording occurs only during daylight construction work hours.

C. Maintain cameras and Web-based access in good working order according to Web-based construction photographic documentation service provider's written instructions until final completion. Provide for service of cameras and related networking devices and software.

END OF SECTION

• FILENAME \p Z:\SPECS\public\(1) CSI WORKFILES\TORRANCE TRANSIT\(10A) PHASE 1 - ROUGH GRADING - 09 01 15\01 3231 mac Construction Photos.doc•

SECTION 01 3323
SHOP DRAWINGS, PRODUCT DATA AND SAMPLES

PART 1 - GENERAL

1.1 SUMMARY

A. Section includes:

1. A requirement for submittal of shop drawings, product data, samples and other submittals so specified below.

B. In addition to other requirements of the Contract Documents pertaining to submittals, submit shop drawings, product data, samples, and similar submittals required by the Contract Documents for the Architect's review before proceeding with the work affected by these submittals.

C. Submittals made by the Contractor to the Architect that are not required by the Contract Documents may be returned without review.

D. Do not perform any portion of the Work requiring submittal and review of shop drawings, product data and samples, and similar submittals required by the Contract Documents, until the Architect has approved the respective submittal. Such work shall be in compliance with the approved submittals.

E. Related work:

1. Section 01 3216 for construction schedules.

2. Section 01 7700 for closeout submittals.

3. Section 01 7839 for record documents.

1.2 SCHEDULING

A. Designate in construction schedule, specified in Section 01 3216, dates for submittals to be submitted to the Architect. Contractor shall allow a minimum of 10 full working days on the schedule to allow Architect to review and return submittals; additional time may be required for certain submittal items.

1.3 LOG

A. Prepare, and update on a regular basis, a shop drawing log using AIA Form G712, or similar form acceptable to the Architect, listing all the required shop drawings by reference to Specification Section number and their submittal date coordinated with the construction schedule.

1.4 DEFINITIONS

A. The terms "shop drawings" and "product data" as used herein also include, but are not limited to, fabrication, erection, layout and setting drawings, manufacturers' standard drawings, descriptive literature, catalogues, brochures, performance and test data, wiring and control

diagrams, all other drawings and descriptive data pertaining to materials, equipment, piping, duct and conduit systems, and methods of construction as may be required to show that the materials, equipment, or systems and the positions thereof conform to the Contract Documents.

1. Shop drawings are drawings, diagrams, schedules and other date specially prepared for the Work by the Contractor or a subcontractor, manufacturer, supplier or distributor to illustrate some portion of the Work.

2. Samples are physical examples that illustrate materials, equipment or workmanship and establish standards by which the Work will be judged.

3. Product data are illustrations, schedules, performance charts, instructions, brochures, diagrams and other information furnished by the Contractor to illustrate materials or equipment for some portion of the Work.

1.5 SUBMITTALS

A. Prior to the first submittal, submit for review the proposed submittal transmittal form and an impression of the Contractor's approval stamp to be used on submittals.

1.6 SHOP DRAWINGS

A. Identify details by reference to sheet and detail numbers shown on the Drawings.

B. Shop drawings shall show in detail, materials, dimensions, including thickness, methods of assembly, attachments, relation to adjoining work, and all other pertinent data and information.

C. Shop drawings with the notation "VERIFY DIMENSIONS" will not be reviewed.

D. Prepare composite shop drawings and installation layout drawings, where required, to depict proposed solutions for tight or critical field conditions. These composite shop drawings or installation layout drawings shall be coordinated by the Contractor and subcontractors for proper relationship with the work of all other trades based on field conditions.

1.7 PRODUCT DATA

A. Manufacturer standard schematic drawings:

1. Modify drawings to delete information not applicable to Project.

2. Supplement standard information to provide additional information applicable to Project.

B. Manufacturer catalog sheets, brochures, diagrams, schedules, performance charts, illustrations and other standard descriptive data.

1. Clearly mark each copy to identify pertinent materials, products or models.

2. Show dimensions and clearances required.

3. Show performance characteristics and capacities.

4. Show complete wiring diagrams and controls.

1.8 SAMPLES

A. Unless otherwise specified, submit samples of sufficient size and quantity to clearly illustrate characteristics of product or material, and full range of colors and/or texture. Whenever possible provide color and texture samples on product specified.

B. Label each sample to indicate the Project name, Contractor, manufacturer, brand, quarry, job number, color, type, and similar required information. Label shall be solidly attached or adhered to the samples; samples received without labels will be returned without action.

C. Erect field samples and mockups at Project site, unless specified otherwise, in locations acceptable to the Architect. Construct each sample or mockup complete, including work of all trades required in finished work.

1.9 STRUCTURAL CALCULATIONS

A. Where required by the Contract Documents, submit calculations signed and sealed by a California-licensed civil or structural engineer for the material or assembly specified to demonstrate compliance with provisions of the Contract Documents and Code.

1.10 TEMPORARY FACILITIES AND CONTROLS

A. Submittals for temporary facilities and controls, when made to the Architect, are for information only and will not be returned.

1.11 CERTIFICATES AND AFFIDAVITS

A. Statements made by the Contractor, subcontractor, manufacturer, supplier, fabricator, or distributor to certify that certain requirements of the Specifications have been met.

B. Review certificates before submitting to Architect, to ensure that the affidavit is properly worded and signed.

C. Each certificate shall be signed by an official authorized to certify on behalf of the Contractor, subcontractor, manufacturer, supplier, fabricator, or distributor of the and shall contain the name and address of the Contractor, the Project name and location, reference to products, systems, shop drawings, and product data, and the quantity and date or dates of shipment or delivery to which the certificates apply.

1. Copies of laboratory test reports submitted with certificates shall contain the name and address of the testing laboratory and the dates of tests to which the report applies.

D. Certification shall not relieve the Contractor from providing satisfactory material if, after tests are performed on selection samples, the material is found not to meet the specified requirements.

E. The specified acoustical and noise control products represent a minimum level of quality and performance. Where acoustical ratings are scheduled and submittals are requested, submit detailed performance specifications and independent acoustical laboratory test reports. Any proposed substitutions shall be clearly identified as such and accompanied by manufacturer's catalog information including detailed performance specifications and independent acoustical laboratory test reports from an NVLAP accredited laboratory. Substitutions will not be considered without proper documentation of acoustical performance.

1.12 SUBMITTAL REQUIREMENTS

A. Submittals dates shall be staggered to correspond to the chronological sequence of construction. Early submittals for products or assemblies, such as finishes, unless they affect the critical path, will not be reviewed and will be returned to the Contractor for later re-submittal.

B. Submittals not in compliance with the milestone dates accepted by the Architect in the construction and submittal schedule (out-of-sequence submittals), will not be reviewed and will be returned to the Contractor.

C. Review, approve, and submit shop drawings, product data and samples, and similar submittals required by the Contract Documents, to the Architect with reasonable promptness and in such sequence as to cause no delay in the Work or in the activities of the City or of separate contractors, and to allow Architect ample time for review before the date approved submittals will be needed to maintain construction schedule. Contractor shall allow 10 full working days for Architect to review and return submittals; additional time may be required for certain submittal items.

D. Submit a minimum of 2 prints of shop drawings and project data for Contractors' use and sufficient quantity for Architect and his consultants. Bind each set in sequence.

E. Submit 3 samples, unless specified otherwise. By pre-arrangement with the Architect, or where so specified, submit a single sample for review; this sample, when approved, shall be installed in the Work where it can easily be referenced for future comparison with work of the same kind.

F. Submit 3 copies of structural calculations, bound in sequence.

G. Accompany submittals with transmittal letter, in duplicate, containing the following information. Number all submittals, and the accompanying transmittal, sequentially.

1. Date.

2. Project title and number.

3. Contractor name and address.

4. The number of each shop drawing, product data and sample submitted.

5. Notification of deviations from Contract Documents.

6. Other pertinent data.

H. Normally a separate transmittal form shall be used for each specific item or class of material or equipment for which a submittal is required.

1. Transmittal of a submittal for more than one item using a single transmittal form will be permitted only when the items taken together constitute a manufacturer "package" or are so functionally related that expediency indicates a review of the group or package as a whole.

2. Collate multiple-page submittal into sets and staple or bind each set as appropriate prior to transmittal to the Architect.

I. Submittals shall include the following:

1. Date and revision number.

2. Project title and number.

3. The names of: Architect, Contractor, subcontractor, supplier, manufacturer, and separate detailer, when pertinent.

4. Identification of product or material.

5. Relation to adjacent structure or materials.

6. Field dimensions, clearly identified as such.

7. Specification Section number.

8. Applicable standards, such as ASTM or Federal Specification number.

9. Two 2 -inch by 4 -inch blank spaces for the Contractor and Architect stamp.

10. Identification of deviations from Contract Documents. Contractor stamp, initialed or signed, certifying to review of submittal, verification of field measurements and compliance with Contract Documents.

J. By approving and submitting shop drawings, product data, samples and similar submittals the Contractor represents that the Contractor has determined and verified materials, field measurements and field construction criteria related thereto, or will do so, and has checked and coordinated the information contained within such submittals with the requirements of the Work and of the Contract Documents.

K. Informational submittals upon which the Architect is not expected to take responsive action may be so identified in the Contract Documents.

L. When professional certification of performance criteria of materials, systems or equipment is required by the Contract Documents, the Architect shall be entitled to rely upon the accuracy and completeness of such calculations and certifications furnished by the Contractor.

1.13 RESUBMISSION REQUIREMENTS

A. Revise initial shop drawings, when required, and resubmit as specified for initial submittal. Indicate on drawings changes made, other than those requested by Architect, clearly by clouding or similar acceptable method.

B. Submit new product data and samples as required for initial submittal.

C. Submit revised calculations as required for initial submittal.

D. Identify resubmittal with the original submittal number followed by an alphabetic suffix (i.e. 10A).

1.14 DISTRIBUTION OF SUBMITTALS

A. Distribute copies of shop drawings, product data and other required submittals to Contractor Project site file and project record documents file, and to subcontractors, supplier and fabricator, as applicable.

B. Distribute samples to manufacturer, distributor, supplier or subcontractor, as applicable.

1.15 ARCHITECT DUTIES

A. The Architect will review submittals with reasonable promptness and approve them or take other appropriate action, when applicable, for design concept of Project and information given in Contract Documents.

B. Approval of separate item will not constitute review of an assembly in which item functions.

C. The Architect will stamp and initial or sign submittals indicating review of same, and will return submittals to Contractor for distribution.

D. The term “informational submittals” means that Contractor-furnished data and drawings are for Architect’s review only, and do not require Architect’s approval.

END OF SECTION

• FILENAME \p Z:\SPECS\public\(1) CSI WORKFILES\TORRANCE TRANSIT\(10A) PHASE 1 - ROUGH GRADING - 09 01 15\01 3323 mac Submittals.doc•

SECTION 01 4200
TESTING AND INSPECTION

PART 1 - GENERAL

1.1 SECTION INCLUDES

A. Testing and inspection services to meet requirements of the California Building Code (CBC), Title 24, Parts 1 and 2, as indicated on the Drawings.

B. One or more certified inspectors employed by the OWNER in accordance with the requirements of California Building Standards Administrative Code will be assigned to the Work with their duties as specifically defined in Section 4-333(b).

C. Tests of materials are required by a certified testing agency as set forth in Section 4-335 of the California Building Standards Administrative Code.

1.2 RELATED SECTIONS

A. Section 01 1100: Summary of Work

B. Section 01 3113: Project Coordination

C. Section 01 3323: Shop Drawings, Product Data and Samples

D. Section 01 4216: Definitions and Standards

E. Section 01 4516: Contractor Quality Control

F. Section 01 7700: Project Closeout

PART 2 - PRODUCTS

NOT USED

PART 3 - EXECUTION

3.1 TESTS

A. OWNER will select an independent testing agency to conduct tests, sampling, and testing of materials. Selection of material to be tested shall be by the agency and not by the CONTRACTOR, unless otherwise stated elsewhere in the project Specification or on the Projects Plans.

B. Any material shipped from the source of supply prior to having satisfactorily passed such testing and inspection or prior to the receipt of notice from the IOR such testing and inspection is not required shall not be incorporated into the Work.

C. OWNER will select and directly reimburse testing agency the costs for all required tests and inspections, but may be reimbursed by the CONTRACTOR for such costs as noted in related sections of the Contract Documents.

D. The independent testing agency is not authorized to release, revoke, alter, or enlarge requirements of the Contract Documents or approve or accept any portion of the Work. The agency shall not perform any duties of the CONTRACTOR.

E. CONTRACTOR shall provide an insulated curing box with the capacity for twenty (20) concrete cylinders and will relocate said box and cylinders as rapidly as required in order to provide for progress of the Work.

3.2 TEST REPORTS

A. Test reports shall include all tests performed, regardless of whether such tests indicate the material is satisfactory or unsatisfactory. Samples taken but not tested shall also be reported. Records of special sampling operations as required shall also be reported. Reports shall indicate the material or materials were sampled and tested in accordance with requirements of CBC, Title 24, Parts 1 and 2, as indicated on the Drawings. Test reports shall indicate specified design strength. They shall also definitely state whether or not material or materials tested comply with the specified requirements.

B. Costs for additional tests or inspections required due to substitution in materials, failed tests or inspections, non-compliance work, overtime, and out of state work will be paid by the District and backcharged to the Contractor.

3.3 VERIFICATION OF TEST REPORTS

A. Each testing agency shall submit to the Architect a verified report in duplicate covering tests which are required to be performed by that agency during progress of the Work. Such report shall be furnished each time construction on the Work is suspended, covering tests up to that time, and prior to Substantial Completion of the Work, covering all tests.

3.4 INSPECTION BY OWNER

A. OWNER and its representatives shall at all times have access, for purpose of inspection, to all parts of the Work and to shops wherein the Work is in preparation, and CONTRACTOR shall at all times maintain proper facilities and provide safe access for such inspection.

B. OAR shall have the right to reject materials and/or workmanship deemed defective Work, and to require correction. Defective workmanship shall be corrected in a satisfactory manner and defective materials shall be removed from the premises and legally disposed of, all without charge to the OWNER. If the CONTRACTOR does not correct such defective Work within a reasonable time, fixed by written notice and in accordance with the terms and conditions of the Contract Documents, the OWNER may correct such defective Work and proceed in accordance with related Articles of the Contract Documents.

C. CONTRACTOR is responsible for compliance to all applicable local, state, and federal regulations regarding codes, regulations, ordinances, restrictions, and requirements.

3.5 INSPECTOR OF RECORD

A. Inspector of Record is employed by the OWNER in accordance with requirements of Title 24 of the California Code of Regulations with their duties specifically defined therein.

B. Inspection of Work shall not relieve the CONTRACTOR from any obligation to fulfill all of the terms and conditions of the Contract Documents.

C. CONTRACTOR shall be responsible for scheduling times of inspection, tests, sample taking, and similar activities of the Work.

3.6 TESTS AND INSPECTIONS

A. The following tests and inspections do not limit inspection of the Work but are required by code regulations and other agencies, or are required in related Sections of the Contract Documents.

B. Excavations, Foundations, and Retaining Walls - CBC, Chapter 17:

1. Inspection:

a.	All Earthwork, Including Earth Fill Compaction	1704.7
b.	Inspection of Excavation / Fill Installation	1704.1; 1704.7
c.	Inspection of Cast-in-Place Piles	1704.9

C. Concrete - CBC, Chapter 17 and 19:

1. Materials:

a.	Test of Materials	1903.1; 1916.1
b.	Portland Cement Tests	1704.4; 1903; 1916.1.5
c.	Concrete Aggregate	1704.4; 1903; 1916.1.3
d.	Reinforcing Bars	1704.4; 1916.1.6

2. Quality:

a.	Proportions of Concrete	1905.2; 1905.3; 1905.4
b.	Mixing and Placing	1905.1
c.	Concrete Testing	1905.1; 1905.6
d.	Composite Construction Cores	1916.1.8
e.	Gypsum Concrete Strength Tests	1914.1; 1916.1.10

3. Inspection:

a.	Project Site Inspection	1704; 1704.4; 1905.7
b.	Batch Plant or Weigh-master Inspection	1704.4
c.	Reinforcing Bar Welding Inspection	1704.3.1.3; 1704.4.1; 1903
d.	Post-Installed Anchors	1704.4; 1916.1.11

D. Lightweight Metal - CBC, Chapter 20:

1. Materials:

a.	Alloys	2002.1
b.	Identification	2002.1

2. Inspection:

a.	Welding	2003.1

E. Masonry - CBC, Chapter 17, 19, and 21:

1. Materials:

a.	Masonry Units	2103.1 through 2103.7
b.	Portland Cement	1903; 1916.1.5; 2103
c.	Mortar & Grout Aggregates	2103.8 through 2103.10; 2103.12
d.	Reinforcing Bars	2103.13

2. Quality:

a.	Portland Cement Tests	1704.4; 1903; 1916.1.5
b.	Mortar & Grout Tests	2105.2.2; 2114.9.1
c.	Masonry Prism Tests	2105.2.2.2; 2105.3; 2114.9.2
d.	Masonry Unit Tests	2105.2.2.1; 2114.9
e.	Masonry Core Tests	2114.9.3
f.	Reinforcing Bars	1916.1.6; 2103.13

3. Inspection:

a.	Reinforced Masonry	1704.5; 2105
b.	Reinforcing Bar Welding Inspection	1704.3.1.3; 1704.5; 1903
c.	Post Installed Anchors	1704.5

F. Steel - CBC, Chapters 17 and 22:

1. Materials:

a.	Structural Steel	2205.1
b.	Cold Formed Steel	2209.1; 2210.1
c.	Material Identification	2203.1

2. Inspection and Tests:

a.	Inspection and Test of Structural Steel	1704.3; 2211

b. Tests of High Strength Bolts, Nuts, and Washers 2211.5.1

c. Tests of End Welded Studs 2211.5.2

d. Shop Fabrication Inspection 1704.2; 1704.2.1; 1704.3

e. Welding Inspection 1704.3.1

f. High Strength Bolt Inspection 1704.3.3

g. Spray applied fire resistance materials 1704.12

G. Exterior Wall Coverings - CBC, Chapter 14 and 25:

1. Materials:

a. Portland Cement Plaster 2510; 2511; 2512; 2513

2. Inspection:

a. Veneer Inspection 1405; 1409

END OF SECTION

SECTION 01 4216
DEFINITIONS AND STANDARDS

PART 1 - GENERAL

1.1 SUMMARY

A. Section includes general requirements pertaining to reference standards and specifications listed in the Project Manual or indicated on the Drawings.

B. Work specified by reference to a published standard or specification of a government agency, technical association, trade association, professional society or institute, testing agency, or other organization shall comply with, or exceed the minimum standards of quality for materials and workmanship established by the designated standard or specification.

C. Unless the Contract Documents indicate otherwise:

1. Where conflict exists between referenced documents and Contract Documents, or between referenced documents, the one having more stringent requirements applies.

2. Refer requirements that are different but apparently equal and uncertainties as to which quality level is more stringent to the Architect for a decision before proceeding with the affected work.

D. Where both a standard and a brand name are specified for a product in the Project Manual, the proprietary product named shall conform to or exceed the requirements of the specified reference standard. The listing of a trade name in a Project Manual shall not be construed as warranting that such product conforms to the respective reference standard.

E. Each entity engaged in construction on the Project is required to be familiar with industry standards applicable to that entities' construction activity.

F. Copies of standards:

1. Copies of applicable referenced standards are not bound in the Project Manual.

2. Where copies of standards are needed for superintendence and quality control of the Work, obtain a copy or copies directly from the publication source and maintain in an orderly manner at the Project Site, available to the Contractor's personnel, Subcontractors, City and Architect.

G. The applicable edition of the reference standard and specification, except as listed in subparagraphs 1 and 2 below, is the latest date of issue 30 days before bids are received, when bids are requested, or on effective date of the Agreement if there is no bid.

1. Where a publication date follows the standard.

2. Issues listed in governing building code and regulations supersede the above requirements.

H. No provisions of any referenced standards or specifications, whether or not specifically incorporated by reference in the Contract Documents, shall be effective to change the duties and responsibilities of the City, the Architect, or Contractor, or any of their consultants, agents or employees from those set forth in the Contract Documents, nor to assign to any of them any

responsibility, duty or authority for safety precautions or procedures, or to supervise or direct the performance of the Work.

I. When so required by the Architect during the course of the Work, or by the Contract Documents, deliver to the Architect 3 copies of an affidavit or certificate, signed by the material manufacturer or supplier, stating that the material furnished conforms to the specification or standard specified.

J. For acronyms and full name of same, and for addresses and telephone number of the associations, societies and institutes referenced in the Specifications, refer to *"Sources of Construction Information"* published by, and available from the Construction Specification Institute (703.684.0300), *"Encyclopedia of Associations"* by Gale Research, or *"National Trade & Professional Associations of the US"* by Columbia Books.

END OF SECTION

• FILENAME \p Z:\SPECS\public\(1) CSI WORKFILES\TORRANCE TRANSIT\(10A) PHASE 1 - ROUGH GRADING - 09 01 15\01 4216 mac Definitions and Standards.doc•

SECTION 01 4516
CONTRACTOR QUALITY CONTROL

PART 1 - GENERAL

1.1 SUMMARY

A. Section includes general requirements for quality control of the Work, including test and inspection procedures.

B. Related work:

1. Section 01 4523 for tests and inspections.

2. Divisions 2 through 48 for specific test procedures to be performed in compliance with this Section.

1.2 ADMINISTRATIVE STAFF

A. Provide a competent and adequate staff for the administration, coordination, supervision, and superintendence of the Work.

B. Do not change key members of this staff without the consent of the City, unless such staff members prove to be unsatisfactory to the Contractor and cease to be in his employ. If the Contractor intends to change a key staff member, he shall give the City written notice at least 15 days prior to the intended change.

C. Key staff members shall be full time employees, stationed at the site.

D. Project staff shall include, but shall not be limited to, the following:

1. Project Manager: The person who has responsibility for the prosecution of the work and who has the authority to act in matters for the coordination, direction, and technical administration of the work. Prior to commencement of the work, provide the City with the name of the project manager.

2. Superintendent: The person who shall be in attendance at the Project site during the performance of the work. The superintendent shall represent the Contractor, and communications given to the superintendent shall be as binding as if given to the Contractor.

3. Additional staff: In addition to the general project superintendent required above, provide the services of coordinating engineer for HVAC, Plumbing, Fire Protection, and Electrical Work: The full time person who has the responsibility for the coordination of the mechanical and electrical work with the work of other trades, for the review of mechanical and electrical shop drawings, for the resolution of conflicts and interferences between trades, for directing adjustments in the work that shall be required to comply with the Contract Documents, and for commissioning the mechanical and electrical systems. This individual shall have previous experience in coordinating these areas of work on projects of similar scale and complexity.

1.3 CONTRACTOR QUALITY CONTROL SYSTEM

A. Establish a quality control system to perform sufficient inspections and tests of all items of Work, including that of all subcontractors, to ensure conformance with the Contract Documents for materials, workmanship, construction, finish, functional performance and identification.

B. Quality control system shall ensure that the Work complies with the requirements of the Contract Documents. Controls shall be adequate to cover all construction operations.

C. Apply, install, connect, erect, use, clean, adjust, and condition articles, materials and equipment in compliance with their manufacturer latest published instructions, unless more restrictive or stringent requirements are specified in the Specifications.

1. When specified or requested, furnish the Architect 2 copies of such printed instructions prior to introduction of such items.

2. If product manufacturer instructions are in conflict with the Contract Documents, notify the Architect for clarification before proceeding.

3. Keep a clean, legible copy of the various product manufacturers instructions applicable to the Work at the Project site.

D. Certificates:

1. When specified, deliver to the Architect 2 signed certificates from suppliers of materials, equipment and manufactured items stating that such materials and manufactured items meet or exceed the standards specified.

2. In lieu of such certification, the Contractor may submit reports of current tests made and attested by a reputable and recognized testing laboratory.

1.4 CONTRACTOR ASSISTANCE

A. Cooperate with individual or firm performing required inspections, tests and similar services and provide reasonable auxiliary services as requested. Notify the individual or firm sufficiently in advance of operations to permit assignment of personnel. Auxiliary services required include but are not limited to:

1. Providing access to the work to be tested or inspected and furnishing incidental labor and facilities necessary to facilitate inspections and tests.

2. Taking adequate quantities of representative samples of materials that require testing or assisting the agency in taking samples.

3. Providing facilities for storage and curing of test samples, and delivery of samples to testing laboratories.

4. Providing the individual or firm with a preliminary design mix proposed for use for materials mixes that require control by the testing agency.

5. Providing security and protection of samples and test equipment at the Project site.

1.5 VERIFICATION OF CONDITIONS

A. Prior to installation of any product, inspect existing supports and assemblies to receive materials to be installed and arrange for correction of defects in the existing workmanship, material or conditions that may adversely affect work to be installed.

B. Installation of materials will constitute acceptance of existing conditions as being in proper condition to receive the materials to be applied and waiver of claim that existing conditions are defective as pertains to warranty requirements.

C. Where the Specifications require a product to be installed under the supervision or inspection of the material manufacturer or its representative, manufacturer or its representative shall also inspect the work in place and issue a letter to Architect verifying that this procedure was followed without exception.

1.6 INSTALLER QUALIFICATIONS

A. Where the Specifications dictate a certain level of experience or expertise from the subcontractor/installer by requiring a minimum number of years of experience in the successful installation of a product or a minimum number of successful installations for the product specified, it shall be the Contractor responsibility to verify the installer's competence and track record before signing a subcontract to perform the affected work.

1.7 MANUFACTURER FIELD SERVICES

A. An experienced, competent, and authorized representative of the manufacturer of each item of equipment for which field services are required in the Specifications shall visit the site of the Work and inspect, check, adjust if necessary, and approve the equipment installation.

B. In each case, the representative shall revisit the job-site as often as necessary until all problems are corrected and the equipment installation and operation are satisfactory, in the opinion of the Architect.

C. Each manufacturer representative shall furnish to the Architect a written report certifying that the equipment has been properly installed, and lubricated; is in accurate alignment; is free from any undue stress imposed by connecting piping or anchor bolts; and has been operated under full load conditions and that it operated satisfactorily.

D. All costs for these services shall be included in the Contract.

END OF SECTION

• FILENAME \p Z:\SPECS\public\(1) CSI WORKFILES\TORRANCE TRANSIT\(10A) PHASE 1 - ROUGH GRADING - 09 01 15\01 4516 mac Contractors Quality Control.doc•

SECTION 01 5000
TEMPORARY FACILITIES AND CONTROLS

PART 1 - GENERAL

1.1 SUMMARY

A. Section includes furnishing, installing and maintaining temporary facilities and controls required for the performance of the Work.

B. Supervise the use of temporary facilities and controls. Enforce compliance with applicable standards. Prevent abuses of services.

C. Temporary facilities include, but are not limited to:

1. Temporary utilities:

a. Temporary electric lighting and power.

b. Temporary water.

c. Temporary heat and ventilation.

d. Temporary telecopier and telephone service.

e. Temporary sanitary facilities.

f. Temporary first aid, fire protection and other temporary facilities in compliance with legal requirements.

2. Construction aids.

3. Barriers.

4. Traffic regulations and controls.

5. Field offices and storage sheds.

6. Construction fence.

7. Temporary grading, drainage, erosion and dust control.

8. Temporary project sign.

9. Removal of graffiti during construction.

10. Temporary sidewalks, bridge, curbs, gutters and pavement markings.

11. Hoists and temporary elevator use.

D. Unless otherwise noted elsewhere in the Contract Documents, costs of installation, operation, maintenance and removal of temporary facilities and controls shall be borne by the Contractor.

1. Should City occupy part of the Project during the construction period, utility costs will be shared proportionately at an agreed upon unit cost.

1.2 DESIGN REQUIREMENTS

A. Provide design and engineering for construction facilities and temporary controls (including but not limited to shoring, bracing and guying) in accordance with applicable codes, standards and industry practices.

1.3 SUBMITTALS

A. Submit the following at least 2 days before preconstruction conference, and before beginning construction of any temporary facilities.

B. Information and drawings required to fully describe the facilities, and their proposed locations on the site for review. Show the proposed activity in each portion of the Work area and identify the areas of limited use or non-use.

C. Proposed vehicle access route(s) to and from the site and expected frequency of use on adjacent streets.

D. Shop drawings of site fence showing gate(s) and site signs.

E. List of Contractor employees and subcontractor employees. List shall be updated daily, a minimum of 1 day in advance.

PART 2 - PRODUCTS

As selected by the Contractor.

PART 3 - EXECUTION

3.1 LIGHT AND POWER

A. Furnish, install and maintain metered temporary electric power required throughout the construction period, so that power can be secured at any desired point within the building.

B. Maintain in a safe manner and utilize so as not to constitute a hazard to persons or property.

C. Comply with legal requirements.

3.2 WATER

A. Furnish, install and maintain temporary water services for drinking and construction purposes for all parts of the work.

3.3 ENCLOSURES/HEATING/VENTILATING

A. When openings in the building enclosure (roofs and walls) are unprotected, protect the building interior, finishes, and equipment, where applicable, from the elements and sudden temperature

changes by covering openings with weathertight tarpaulins firmly secured in place and maintained until permanent measures are taken.

B. Furnish, install and maintain weathertight enclosures, and temporary heat and ventilation required to maintain adequate environmental conditions to:

1. Facilitate progress of the Work.

2. Meet specified minimum environmental conditions for the installation of materials.

3. Protect materials and finishes from damage due to environmental conditions.

4. And as necessary to ensure suitable working conditions for the construction operations of all trades.

C. Maintain building temperature and humidity as specified in various Sections of the Specifications, or when not specified, as recommended by the manufacturer of the material being installed.

D. Furnish, install and maintain adequate forced ventilation of enclosed areas for curing of installed materials, to disperse humidity, and to prevent hazardous accumulations of dust, fumes, vapors or gases.

E. Temporary heaters, when used, shall be UL listed units of type approved by governing authorities, in good working conditions, and properly vented to the exterior.

3.4 TELEPHONE AND DATA SERVICE

A. Provide and maintain telephone service to field office for duration of construction, including speaker phone capability on all telephone instruments.

B. Provide and maintain one dedicated line for facsimile service, and an automatic facsimile machine in field office.

C. Provide and maintain a dedicated high speed (DSL or cable) line for email service compatible with both City's and Architect's systems, and computer terminal and modem, in field office. Email service shall be in operation 24 hours a day, 7 days a week.

D. Provide telephone voice mail capabilities through local telephone company or with separate equipment.

3.5 TEMPORARY SANITARY FACILITIES

A. Furnish, install and maintain for workers on the Project as required by, and in compliance with, legal requirements.

3.6 FIRST AID/FIRE PROTECTION/OTHER TEMPORARY FACILITIES

A. Furnish, install and maintain as required by, and in compliance with, legal requirements.

3.7 TEMPORARY GRADING/DEWATERING

A. Temporary grading:

1. As specified in Division 31 and the following.

2. Maintain temporary protection as long as needed, and until permanent draining and grading is completed and operating.

3. Furnish, install, and maintain a temporary drainage system and pumping equipment as required to keep the site, including, but not limited to, excavated areas, free from ponded water from any source. Pump and drain to prevent damage to the Work, to adjacent construction, and to adjacent property.

4. Do not use permanent sump pumps nor footing and/or utility trances for surface water control. Temporary pumps may be installed in the sump pits, if acceptable to the Architect, and pits and drain lines are cleaned after temporary use.

5. Remove water and frost as necessary for the protection and prosecution of the Work.

B. Erosion and sediment control:

1. Furnish, install, and maintain sediment barriers to satisfy the requirements of the work.

2. Locate sediment barriers at the perimeter of the construction area, where slope is outward, and at inlets to drainage structure.

3. Construct sediment barriers to remove sediments from flowing water through filtration and sedimentation. Use slit fences with anchored filter cloth, staked hay bales, or crushed stone as the primary filter medium.

4. Arrange sediment barriers to pond water on the upstream side. Maintain ponding capacity by periodically removing accumulated sediment.

5. Remove sediment barriers only when permanent erosion control is functioning.

6. Comply with the following, whichever is more stringent:

a. 2003 U.S. Environmental Protection Agency's General Construction Permit.

b. City of Torrance Erosion and Sedimentation Control Standards.

7. LEED submittals: Comply with requirements specified in Section 01 8113, Sustainable Design Requirements.

8. Documentation required: Submit a summary, sample log, checklist, inspection report, or similar document that demonstrates periodic inspection of the implemented measures. This documentation shall include:

a. Sample dates.

b. Inspection frequency (at least monthly; year-round).

c. At least 3 inspections equally spaced over the site work period.

9. Descriptions of any corrective action taken.

C. Noise control: Execute the work to minimize noise.

D. Pest control:

1. Institute a program of pest control for the entire site.

2. Cooperate with local authorities and provide the regular services of an experienced exterminator who shall visit the site at least once a month for the entire construction period.

3. Provide marked metal containers for edible rubbish and enforce their use by employees. Empty containers and have the contents removed from the site as often as required to maintain an adequate pest control program.

3.8 PERMANENT SYSTEMS USED AS TEMPORARY FACILITIES

A. When any portion of the permanent systems is in operating condition, that part of the system may be used as a temporary facility, except as otherwise specified, provided that the Contractor:

1. Obtains the City's approval.

2. Assumes full responsibility for the system used.

3. Pays costs for operation, maintenance, cleaning and restoration of the system.

4. Operates the system under the supervision of the subcontractor responsible for the system's installation and ultimate performance.

5. Warranties required by the Contract Documents will not be shortened or otherwise affected by use of the system(s) as a temporary facility.

3.9 MISCELLANEOUS TEMPORARY CONSTRUCTION AIDS

A. Furnish, install and maintain miscellaneous temporary construction aids required for proper execution of the Work, such as stairs, ladders, ramps, railings, canopies, scaffolds and hoists, chutes, barricades, enclosures, platforms, swing staging and walks.

B. Locate in and about the Project as is practicable and where they will not interfere with the progress of the Work. Relocate when necessary during construction and remove promptly when no longer needed.

C. Provide openings where required for moving in large pieces of equipment. Close openings after the equipment is in place. Restore finishes to match adjacent surfaces, as approved by the Architect.

3.10 BARRIERS

A. Security:

1. The City may provide such watchman service as he deems necessary to protect his interest during he progress of the work. Any protection provided by the City will not

relieve the Contractor of the responsibility for the safety of the Work and the acceptance thereof.

2. The Contractor shall employ such watchman service as he may deem necessary to properly protect and safeguard the work. The City shall not in any way be liable or responsible for the damage or loss to the work due to trespass or theft.

3. Furnish, install and maintain protection for materials, tools and equipment employed on the Project including workers tools. The City shall not be held to have incurred any liability for loss of, and damage to, materials, tools and equipment of the Contractor, or of those employed by him, by contract or otherwise.

B. Protection: Continuously maintain protection as necessary to protect the Work as a whole and in part, and adjacent property and improvements from accidents, injuries or damage.

1. Properly protect the Work:

a. With lights, guard rails, temporary covers, and barricades.

b. Enclose excavations with proper barricades.

c. Brace and secure all parts of the Work against storm and accident.

d. Furnish, install and maintain such additional forms of protection which may be necessary under existing circumstances.

2. Furnish, install and maintain in good condition protective measures as may be required to adequately protect the public from hazards resulting from the work and to exclude unauthorized persons from the work. When regulated by authorities having jurisdiction, such legal requirements for protection shall be considered as minimum requirements; be responsible for the protection in excess of such requirements as required.

C. Construction fence: Furnish, install and maintain a temporary construction fence with gates as indicated on the Drawings. Construct in compliance with requirements of authorities having jurisdiction.

1. Provide a chain link fence of 11-gage (minimum) by 2-inch mesh chain link fabric attached to substantial steel pipes spaced at 8 feet o.c. maximum.

2. Provide top and bottom tension wires, unless a top rail is provided, and corner post bracing. Provide chain link gates with welded steel pipe frames and hardware required for proper operation.

3. Unless otherwise authorized by the Architect or the City, do not set posts in or on existing concrete paving, including asphalt concrete, or walls to remain.

4. Obtain and pay for required permits and inspections.

3.11 POLLUTION CONTROL

A. Comply with pollution control regulations in effect at site for materials, equipment and work procedures used on the Project.

3.12 TRAFFIC REGULATION

A. Traffic maintenance:

1. Determine the routing of construction vehicles before starting work, based on restrictions indicated on the Drawings and the safeguards and procedures necessary to carry out the work.

2. Maintain all-weather temporary access to the site and to the designated truck unloading area or areas, available to all the trades.

3. In addition:

a. Be responsible for controlling construction traffic within and adjacent to the site.

b. Provide entrances, lifts and safeguards required or necessary to the progress of the work, and effectively control such traffic to provide minimum hazard to the work and all persons.

c. Route construction equipment, trucks, and similar vehicles via existing public streets to and from the site as approved by the governing authorities.

d. Obtain and pay for permits and inspections necessitated by the use of public streets, sidewalks, curbs, and paving. Post guarantees and bonds that may be required, and repair and make good any damages thereto, acceptable to the authorities having jurisdiction.

e. Construct and maintain temporary walks and bridges for pedestrians. Keep streets adjacent to the site open to vehicular and pedestrian traffic.

f. Maintain constant access for Law enforcement agencies, fire and ambulance service.

g. Furnish, install and maintain for proper control of traffic and safety of all concerned:

1) All necessary barricades, suitable and sufficient lights, reflectors, and danger signals.

2) Warning and closure signs, directional and detour signs.

3) And whatever additional measures necessary.

h. Indicate on a 24 hour basis restricted and dangerous conditions existing on or adjacent to the site.

1) Illuminate barricades, danger signals, warning signs and obstructions at night.

2) Keep warning lights burning from one hour before sunset until one hour after sunrise.

B. Parking: Parking for workers employed on the work is available at the site, but must not interfere with activities related to performance of the Work.

1. Maintain and control parking area.

3.13 PROJECT IDENTIFICATION SIGN

A. Furnish, install and maintain a temporary project sign, as indicated in Section 01 5813. Locate where directed by the Architect at the site. Sign shall be prepared by an experienced professional sign painter.

B. Keep the premises free from other posters, signs, and miscellaneous decorations, except those required by Code and to indicate unsafe conditions.

3.14 GRAFFITI REMOVAL

A. Throughout construction, including suspension of work, and until acceptance of the Project by the City, keep the work site free from graffiti.

B. If graffiti appears, cover, repaint, refinish, or otherwise remove no later than the following day after occurrence.

C. If Contractor fails to do so, City may take steps to remove the graffiti and deduct the cost therefore from the Contract price.

3.15 FIELD OFFICES AND STORAGE SHEDS

A. Furnish, install and maintain a field office not less than 400 sq. ft. for the City's and Architect's use and in which to hold job meetings. Equip the office with lights, heat, air conditioning, telephone, hot and cold water, desk, 6 stackable or folding chairs, conference table of sufficient size for seating 8 people, 3 plan tables, plan rack and a minimum of three 6 ft. shelves.

B. Furnish, install and maintain a field office for the Contractor's use. Equip the office with lights, heat, air conditioning, desks, chairs, plan racks, telephones and other items necessary for the performance of the work.

C. Furnish, install and maintain storage sheds needed for construction.

D. Requirements of regulatory agencies: Comply with requirements of regulatory agencies having jurisdiction.

1. Obtain and pay for permits required by governing authorities.

E. Locate temporary structures to avoid interference with work in progress and relocate as required by job progress.

3.16 BUILDING VENTILATION PERIOD

A. Designate a period of 7 consecutive days prior to Substantial Completion as the "Building Ventilation Period", and indicate such on the construction schedule.

B. Begin the Building Ventilation Period only after completion of all work for the following trades:

1. Carpet.

2. Architectural woodwork, including Plastic laminate casework.

3. Acoustical treatment.

4. Ceramic tile.

5. Painting.

6. Resilient flooring.

7. Wall covering.

C. Before the Building Ventilation Period begins, thoroughly vacuum all carpeted areas as specified.

D. During the Building Ventilation Period operate the HVAC system at 100 percent outside air, or in the event of extreme outside weather conditions, the maximum practical outside air level which will not result in damage to the Work.

E. At the end of the Building Ventilation Period and before Substantial Completion, clean the ventilation system as follows:

1. Clean blowers and coils if units were operated without temporary filters at any time during construction.

2. Replace filters as specified.

3.17 REMOVAL

A. Remove temporary facilities and controls upon completion of construction operations or when they are no longer needed, whichever occurs first but no later than 15 days after Substantial Completion.

B. Before Project closeout procedures start, or earlier when they are no longer needed, remove temporary fencing, signs, foundations, debris; grade to required elevations, clean area of debris and restore to original condition.

END OF SECTION

• FILENAME \p Z:\SPECS\public\(1) CSI WORKFILES\TORRANCE TRANSIT\(10A) PHASE 1 - ROUGH GRADING - 09 01 15\01 5000 mac Temp Facilities and Controls.doc•

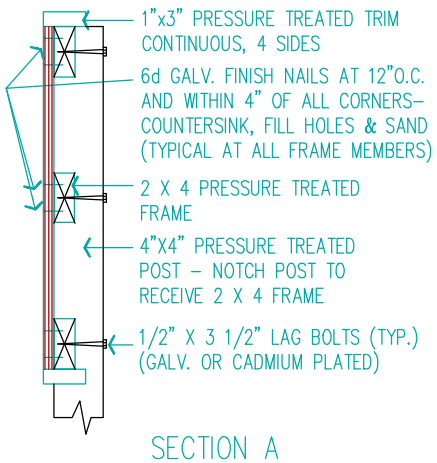

SECTION A
PROJECT SIGN DETAIL

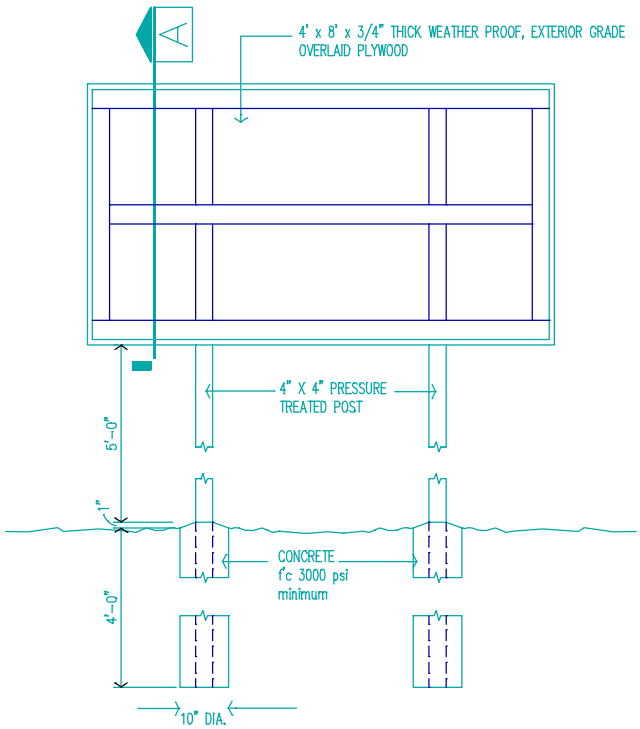

PROJECT SIGN FRAMING ELEVATION

NOTE: LOCATE SIGN WITHIN SECURED LIMITS OF THE CONSTRUCTION AREA SO AS NOT TO BE PHYSICALLY ACCESSIBLE TO THE PUBLIC.

SECTION 01 6400
OWNER-FURNISHED PRODUCTS

PART 1 - GENERAL

1.1 SUMMARY

A. Section includes:

1. This Section describes procedural requirements for the processing, installation, connection, testing and adjustment of City-furnished equipment to be installed by the Contractor.

1.2 DEFINITIONS

A. Symbol definitions: "O" designates the Owner (City); "C" designates the Contractor.

B. Symbol responsibility:

1. OFCI: Furnished by the Owner (City), installed by the Contractor.

2. OFOI: Furnished by the Owner (City), installed by Owner (City).

3. CFCI: Furnished by the Contractor, installed by the Contractor.

1.3 SUBMITTALS

A. Procedure: In accordance with Section 01 3323.

B. Obtain all necessary information from City, in a timely manner, as to manufacturer, model, and type of each OFCI item to be furnished.

C. Shop drawings: Show dimensioned rough-in diagrams for each OFCI item requiring utility connections, dimensioned locations of backing plates required in walls and partitions, and details of connections to supports for all OFCI items.

1. With closeout submittals, furnish the City operation, adjustment, care and maintenance instructions for each item of OFCI equipment installed.

1.4 HANDLING

A. Comply with the requirements of Section 01 6600 and the following.

B. OFCI items will be delivered "tail-gate" FOB jobsite.

C. Contractor shall receive and unload the OFCI items, place them in covered storage or enclosed building(s), and be responsible therefore after delivery. Contractor shall give written receipt at time of delivery, noting visible defects or omissions; refer to Paragraph E below for opening and uncrating of OFCI items.

D. OFCI items that are damaged, abused, lost, or stolen while in Contractor's custody and control, or damaged or defaced during installation shall be repaired, replaced, or otherwise made good to the City's satisfaction at the Contractor's expense.

E. Within 5 days after delivery of the OFCI items, open and uncrate them for inspection.

1. The City and Contractor shall inspect each item and maintain a written record of all damage, missing parts, and other defects disclosed, all of which will be made good by the City.

2. After the inspection, Contractor shall be solely responsible for the equipment as specified above.

1.5 CONTRACTOR'S RESPONSIBILITIES

A. General: Contractor is responsible for correct and properly located installation of the OFCI items in compliance with their manufacturers' specifications and instructions.

1. If a conflict occurs between manufacturer's instructions and actual field conditions, do not install the affected items until the conflict is resolved. No additional payment will be made to the Contractor for correction of improper installation of OFCI items when reasonably adequate data and instructions for installation were furnished by the City or the OFCI item manufacturers.

2. Contractor may request and receive from the City necessary additional information, such as specifications, templates, and like items from any of the manufacturers of the OFCI items. When specified, the Contractor shall request a manufacturer's representative to supervise installation of OFCI items, but at no additional cost to City.

B. Installation materials: Provide attachments, fittings, fasteners, connectors, and other ancillary materials required to make complete, workable installations.

C. Compatibility with space and service requirements:

1. Space limitations, and mechanical and electrical services indicated and specified in other Sections are compatible with OFCI items.

2. Modifications to OFCI items required to conform to space limitations or with utility services specified for rough-in shall not cause additional cost to the City.

D. Provide mounting and utility rough-in for equipment where required.

1. If the City substitutes items similar to those scheduled, there shall be no change in rough-in cost, unless substitution occurs after rough-in has been completed or rough-in involves other mounting requirements, utilities or utilities different capacity from that required by item originally specified.

E. Templates furnished by various OFCI item manufacturers shall be kept at the site for reference and stored readily available to both the City and Architect. Deviations from manufacturers' templates will not be approved.

F. Contractor may request and receive from the City reasonable additional information, specifications, templates, and like items from the manufacturers of the OFCI items. The Contractor may request a manufacturer's representative to supervise installation of OFCI items, but at no additional cost to City.

1.6 CITY'S RESPONSIBILITIES

A. The City will furnish to the Contractor, manufacturer, model and type of each OFCI item to be furnished by the City.

B. The City will purchase the OFCI items and arrange for their delivery at the job site as specified above.

C. City will make available manufacturer's literature or information showing required mounting and rough-in information.

D. The City will coordinate deliveries of OFCI items with the Contractor to coincide with construction schedule.

PART 2 - PRODUCTS

2.1 OFCI EQUIPMENT

A. List: The list of OFCI items is as follows.

B. Installation materials: Provide attachments, fittings, fasteners, connectors, and other ancillary materials required for installations but not usually furnished by the OFCI item manufacturers, types as approved.

PART 3 - EXECUTION

3.1 EXAMINATION

A. Verify that conditions are satisfactory for the installation of equipment. Do not commence the installation until unsatisfactory conditions are corrected.

B. Coordinate installation of OFCI items appliances with the work of related trades for necessary rough-in work, backing, supports and anchorage. Deliver backing and embedments, including templates and instructions for their installation, to affected trades before related construction begins.

3.2 INSTALLATION

A. Comply with each OFCI item manufacturer's specifications, templates, and information, including the necessary assembling of components or sub-assemblies.

B. Install OFCI items securely in place, plumb, level (where applicable), rigidly or flexibly mounted in compliance with their manufacturer's printed instructions and approved shop drawings, including the necessary assembling of components or sub-assemblies. Where so specified, install OFCI items under the supervision of the manufacturer's authorized representative.

C. Make electrical and mechanical connections as indicated and required for the system/assembly to be operational.

D. Touchup and restore damaged or defaced finishes.

3.3 ADJUSTMENT/CLEANING/PROTECTION

A. Employ approved manufacturer's factory-trained service engineer to test equipment and make required adjustments for proper operation.

B. Operate and test each operable OFCI item when installed and connected in the presence of the City and equipment manufacturer. If malfunction occurs through no fault of the Contractor, the City will make the defect good; otherwise, the Contractor shall make the necessary corrections so the item operates properly and as intended, at the Contractor's expense.

C. Repair or replace items not functioning properly or not acceptable to the City.

D. Upon completion of installation, clean OFCI items in compliance with their manufacturer's printed instructions and the provisions of Section 01 7400, and protect from damage until Substantial Completion.

END OF SECTION

• FILENAME \p Z:\SPECS\public\(1) CSI WORKFILES\TORRANCE TRANSIT\(10A) PHASE 1 - ROUGH GRADING - 09 01 15\01 6400 mac Owner-Furnished Products.doc•

SECTION 01 6600
PRODUCT HANDLING

PART 1 - GENERAL

1.1 SUMMARY

A. Section establishes general requirements for product handling and storage, whether on or off the site, and supplements similar provisions found elsewhere in the Contract Documents.

B. Related work:

1. Section 01 5000 for storage of materials on site.

1.2 QUALITY ASSURANCE

A. In the Contractor's quality control program include procedures required to insure protection of work and materials.

1.3 HANDLING

A. General:

1. Transport, deliver, handle, and store all materials and equipment used on the Project to prevent the intrusions of foreign matter, moisture, and to prevent damage. In all cases comply with the following.

2. Material and equipment manufacturer's instructions regarding temperature limitations.

3. Other environmental conditions required to maintain the original quality of the materials and equipment.

B. Packaging:

1. Provide packaged materials in their manufacturer's original containers with seals unbroken and labels intact until incorporating into the Work.

a. Where this information is not provided by the manufacturer on the container, it shall be provided by the supplier, fabricator or subcontractor of these materials.

2. Wrapped or bundled materials shall clearly bear the manufacturer's name and trade mark.

C. Damaged materials: Remove damaged or otherwise unsuitable material and equipment promptly from the site. Do not install damaged materials.

1.4 STORAGE

A. Inspect products upon delivery to ensure compliance with the Contract Documents, and to ensure that products are undamaged and properly protected.

B. Store products at the site to facilitate inspection and measurement of quantity or counting of units.

C. Store heavy materials away from the Project structure in a manner that will not endanger the supporting construction.

1. Do not subject slabs-on-grade to excessive loading by shoring, storage of materials, or operation of construction equipment unless adequately protected by heavy planking. Maintenance of slabs in good condition is the responsibility of the Contractor who shall remove damaged areas of such slabs and replace them with new work, to the Architect's satisfaction, at no cost to the City.

2. Do not subject suspended slabs to construction loads exceeding their design loads, unless adequately shored with shoring designed for the Contractor by a New York-licensed civil or structural engineer, who shall certify prior to imposing construction loads on slabs, that the shoring to be installed conforms with the shoring as designed.

D. Store products subject to damage by the elements above ground, under cover in weathertight enclosure, with ventilation adequate to prevent condensation. Maintain temperature and humidity within range required by manufacturer's instructions.

E. Schedule delivery to minimize long-term storage at the site and to prevent overcrowding of construction spaces.

F. Coordinate delivery with installation time to ensure minimum holding time for items that are flammable, hazardous, easily damaged, or sensitive to deterioration, theft and other losses.

G. Locate storage piles, stacks or bins to avoid being disturbed, and protect from damage of any sort.

H. Store materials and equipment in accord with their manufacturer's instructions, above grade, and properly protected from weather and construction activities.

I. Payment may be withheld for improperly packaged and stored materials.

1.5 PROTECTION

A. Protect finished surfaces, including floors jambs and soffits of all openings used as passageways or through which materials and equipment must travel.

B. Carts, hand trucks, wheelbarrows and similar wheeled conveyances used on or in any portion of the structure shall be equipped with pneumatic tires, unless otherwise authorized by the Architect.

C. Keep finished surfaces clean and unmarred until the date of acceptance.

D. Refer to individual Specification Sections for additional specific product handling and protection requirements.

1.6 MAINTENANCE

A. Maintain periodic system of inspection of stored products on a scheduled basis to assure that:

1. State of storage facilities is adequate to provide conditions recommended by the product manufacturer.

2. Required environmental conditions are maintained on a continuing basis.

3. Surfaces of products exposed to the elements are not adversely affected.

B. Mechanical and electrical equipment which require servicing and/or connection of temporary power for heating and other climatic protection devices, during long term storage, shall have complete manufacturer's instructions accompanying each item, with notice of enclosed instructions shown on the exterior of the packaging.

END OF SECTION

• FILENAME \p Z:\SPECS\public\(1) CSI WORKFILES\TORRANCE TRANSIT\(10A) PHASE 1 - ROUGH GRADING - 09 01 15\01 6600 mac Product Handling.doc•

SECTION 01 7123
FIELD ENGINEERING

PART 1 - GENERAL

1.1 SUMMARY

A. Section includes:

1. General requirements for field engineering.

B. Related work:

1. Division 5 for survey of placement of structural steel and decking.

1.2 GENERAL

A. The topographic survey furnished by the City will identify the existing benchmarks, existing grades, trees, and other improvements.

B. Contractor shall be responsible for the accuracy of the building lines and levels, including ancillary structures and other improvements on the site.

C. Contractor shall employ an independent civil engineer or licensed surveyor, acceptable to the City and Architect, who is not a regular employee of the Contractor and who has no interest in the Contract, to establish building control points.

1.3 LOCATING THE WORK/VERIFICATION

A. As the Work proceeds, verify all grades, lines, levels, and dimensions indicated on the Drawings, and report errors or inconsistencies to the Architect in writing.

B. Do not proceed until errors and inconsistencies are corrected.

C. Establish control points and benchmarks adequate for the use of all trades for reference so that all parts of the Work will be at the required location(s) and within the tolerances specified, or standard with the industry when not specified.

D. Benchmarks:

1. Remove, re-establish and relocate control points and benchmarks as necessitated by construction progress.

2. Replace benchmarks that have been damaged and displaced.

3. Maintain such control points and benchmarks in an undisturbed condition until final completion and final acceptance by the City of the Project as a whole.

E. As soon as practicable, the civil engineer or surveyor shall verify the layout and the Contractor shall furnish certified original drawings of the survey showing exact locations of all portions of the Project.

1. Work that is not correctly located shall be relocated or altered to conform to the Contract Drawings, as the Architect may direct.

2. Additional copies of the survey shall be furnished to the City at his request.

END OF SECTION

• FILENAME \p Z:\SPECS\public\(1) CSI WORKFILES\TORRANCE TRANSIT\(10A) PHASE 1 - ROUGH GRADING - 09 01 15\01 7123 mac Field Engineering.doc•

SECTION 01 7400
CLEANING

PART 1 - GENERAL

1.1 SUMMARY

A. Section includes general requirements for cleaning Project site and building.

B. Keep premises, and adjacent private and public properties free from accumulations of waste, debris and rubbish caused by construction operations.

C. At completion of Work, remove waste materials, rubbish, tools, equipment, machinery and surplus materials, and clean all exposed surfaces. Remove remaining mockups and mockups.

1. Leave Project clean and ready for occupancy.

1.2 SAFETY REQUIREMENTS

A. Standards: Maintain Project in accord with State and local safety and insurance standards.

B. Hazard control:

1. Store volatile wastes in covered metal containers, and remove from premises daily.

2. Prevent accumulation of wastes, which create hazardous conditions.

3. Provide adequate ventilation during use of volatile or noxious substances.

C. Conduct cleaning and disposal operations to comply with local ordinances and anti-pollution laws.

1. Do not burn or bury rubbish and waste materials on Project site.

2. Do not dispose of volatile wastes such as mineral spirits, oil, or paint thinner in storm or sanitary drains. Store in containers with tight-fitting lids and remove to legal dumpsite or to recycling center.

PART 2 - PRODUCTS

2.1 MANUFACTURERS

A. As appropriate for this work, and as follows.

B. Use only commercial grade sweeping compounds with broom cleaning.

C. Use only materials recommended by manufacturers for surfaces to be cleaned.

D. Use cleaning materials only on surfaces recommended by cleaning material manufacturer.

PART 3 - EXECUTION

3.1 DURING CONSTRUCTION

A. Keep premises, and adjacent private and public properties free from accumulations of waste materials and rubbish.

1. Remove debris and dirt from public property promptly; sweep sidewalks and adjacent streets daily when soiled by work performed under this Contract.

2. Remove waste materials, debris and rubbish from the Project site at least weekly.

3. Legally dispose of waste and rubbish at legal public or private dumping areas or recycling center off City's property.

B. Wet down materials and rubbish to lay dust and prevent it from blowing.

C. At least once a week, or more often if required, clean site and buildings, and dispose of waste materials, debris and rubbish off the site. Remove combustible materials such as paper and cardboard daily.

D. Provide on-site containers for collection of waste materials, debris and rubbish. Provide collection can at each location used as eating areas. Pick-up all garbage daily.

E. Do not allow debris and combustible materials to accumulate in, voids, cavities, interstitial spaces, and plenums created by wall, partition, and ceiling construction. These areas must be thoroughly cleaned out before being sealed or closed off by installation of finish materials.

F. Do not allow debris to clog drains. Clean roof drains, scuppers, floor drains and area drains free of debris. Verify that they drain properly. Keep drains clean of debris at all times.

G. Vacuum clean interior areas when ready to be painted. Refer to Section 09 9100 for other provisions on preparation of surfaces to be painted.

H. Handle materials in a controlled manner with as few handling as possible; do not drop or throw materials from heights.

I. Schedule cleaning operations so that dust and other contaminants resulting from cleaning process will not fall on wet, newly painted surfaces.

J. Restore damaged, including stained materials, and finishes that cannot be satisfactorily repaired, or that show evidence of repair unacceptable to the Architect, with new, undamaged materials.

1. Repair and restoration of damaged finishes shall be done by the original installers or experienced craftsmen thoroughly familiar with the work at hand.

3.2 FINAL CLEANING

A. Except as may be otherwise specified elsewhere, "clean" for the purpose of this Article means a level of cleanliness provided by experienced workers or professional cleaners using commercial quality building maintenance equipment and materials.

B. In preparation for Substantial Completion or Occupancy conduct final inspection of sight-exposed interior and exterior surfaces, and of concealed spaces.

C. Remove non-permanent labels.

D. Clean transparent materials and mirrors, including glass in doors and windows. Remove misplaced glazing compound and other substances.

E. Clean exposed exterior and interior hard-surfaced finishes to a dust-free condition, free of stains, films and similar foreign substances.

1. Restore reflective surfaces to their original reflective condition.

2. Leave concrete floors broom clean.

3. After cleaning resilient flooring, wax as specified in the appropriate Section(s) of Division 9.

4. Where rust is present, remove it without damaging substrate, and refinish area.

F. Vacuum carpeted surfaces. Shampoo where necessary.

G. Wipe surfaces of mechanical and electrical equipment. Remove excess lubrication and other substances. Clean plumbing fixtures to a sanitary condition. Clean light fixtures and lamps.

1. Clean tops of equipment, both below and above ceiling spaces.

2. Clean ductwork, piping and conduit.

H. Clean the site, including landscaped areas, of rubbish, litter and other foreign substances.

1. Contaminated earth:

a. Final clean-up operation includes the removal and disposal of earth contaminated or unsuitable for support of plant life in planting areas, and filling of resulting excavations with suitable soil.

b. Contaminated areas include those used for disposal of waste concrete, mortar, plaster, masonry, and similar materials, areas in which washing out of concrete and plaster mixers or washing of tools and like cleaning operations have been performed, and areas that have been oiled, paved or chemically treated.

c. Do not dispose of waste oil, solvents, paints, solutions, or like penetrating material by depositing or burying on City's property.

2. Sweep paved areas broom clean; remove stains, spills and other foreign deposits.

3. Wash down paved surfaces.

4. Rake grounds that are neither paved nor planted, to a smooth even-textured surface.

I. Keep Project clean until occupied by City.

END OF SECTION

• FILENAME \p Z:\SPECS\public\(1) CSI WORKFILES\TORRANCE TRANSIT\(10A) PHASE 1 - ROUGH GRADING - 09 01 15\01 7400 mac Cleaning.doc•

SECTION 01 7419
CONSTRUCTION WASTE MANAGEMENT

PART 1 - GENERAL

1.1 RELATED DOCUMENTS

A. Drawings, Contract Forms, Conditions of the Contract including Construction Manager/General Contractor (CMGC) Agreement, General Conditions and Supplementary General Conditions, and including Exhibits and other Division 1 Specification Sections, apply to this Section.

1.2 SUMMARY

A. This Section includes administrative and procedural requirements for the following:

1. Salvaging nonhazardous construction waste.

2. Recycling nonhazardous construction waste.

3. Disposing of nonhazardous construction waste.

B. Related Sections include the following:

1. Division 01 Section "Multiple Contract Summary" for coordination of responsibilities for waste management.

2. Division 01 Section "Sustainable Design Requirements" for additional LEED requirements.

3. Division 01 Section "Temporary Facilities and Controls" for environmental-protection measures during construction, and location of waste containers at Project site.

4. Division 02 Section "Structure Demolition" for disposition of waste resulting from demolition of buildings, structures, and site improvements, and for disposition of hazardous waste.

5. Division 02 Section "Selective Structure Demolition" for disposition of waste resulting from partial demolition of buildings, structures, and site improvements, and for disposition of hazardous waste.

6. Division 02 Section "Site Clearing" for disposition of waste resulting from site clearing and removal of above- and below-grade improvements.

7. Division 02 Section "Earthwork" for disposition of asphalt, concrete, and masonry for use as general fill.

8. Division 02 Section "Exterior Plants" for disposition of organic waste for use as mulch.

9. Division 04 Section "Unit Masonry" for disposal requirements for masonry waste.

10. Division 04 Section "Stone Masonry" for disposal requirements for excess stone and stone waste.

11. Division 31 Section "Site Clearing" for disposition of waste resulting from site clearing and removal of above- and below-grade improvements.

1.3 DEFINITIONS

A. Construction Waste: Building and site improvement materials and other solid waste resulting from construction, remodeling, renovation, or repair operations. Construction waste includes packaging.

B. Demolition Waste: Building and site improvement materials resulting from demolition or selective demolition operations.

C. Disposal: Removal off-site of demolition and construction waste and subsequent sale, recycling, reuse, or deposit in landfill or incinerator acceptable to authorities having jurisdiction.

D. Recycle: Recovery of demolition or construction waste for subsequent processing in preparation for reuse.

E. Salvage: Recovery of demolition or construction waste and subsequent sale or reuse in another facility.

F. Salvage and Reuse: Recovery of demolition or construction waste and subsequent incorporation into the Work.

1.4 PERFORMANCE GOALS

A. General: Develop waste management plan that results in end-of-Project rates for salvage/recycling of 75 percent by weight of total waste generated by the Work.

B. Salvage/Recycle Goals: Owner's goal is to salvage and recycle as much nonhazardous construction waste as possible including the following materials:

C. Salvage/Recycle Goals: Owner's goal is to salvage and recycle as much nonhazardous construction waste as possible. Owner has established minimum goals for the following materials:

1. Construction Waste:

a. Site-clearing waste.
b. Masonry and CMU.
c. Lumber.
d. Wood sheet materials.
e. Wood trim.
f. Metals.
g. Roofing.
h. Insulation.
i. Plastic.
j. Glass.
k. Carpet and pad.
l. Gypsum board.
m. Field and office waste.
n. Brick.
o. Acoustical tile.
p. Piping.
q. Electrical conduit.

r. Packaging: Regardless of salvage/recycle goal indicated above, salvage or recycle 100 percent of the following uncontaminated packaging materials:

1) Paper.
2) Cardboard.
3) Boxes.
4) Plastic sheet and film.
5) Polystyrene packaging.
6) Wood crates.
7) Plastic pails.

1.5 SUBMITTALS

A. Waste Management Plan: Submit 3 copies of plan within 30 days of date established for commencement of the Work. Plan shall be submitted to the Sustainable Design Consultant prior to commencement of the Work onsite.

B. Waste Reduction Progress Reports: Concurrent with each Application for Payment, submit three copies of report and forward to Sustainable Design Consultant. Include the following information:

1. Material category.

2. Generation point of waste.

3. Total quantity of waste in tons.

4. Quantity of waste salvaged, both estimated and actual in tons.

5. Quantity of waste recycled, both estimated and actual in tons.

6. Total quantity of waste recovered (salvaged plus recycled) in tons.

7. Total quantity of waste recovered (salvaged plus recycled) as a percentage of total waste.

C. Waste Reduction Calculations: Before request for Substantial Completion, submit three copies of calculated end-of-Project rates for salvage, recycling, and disposal as a percentage of total waste generated by the Work.

D. Records of Donations: Indicate receipt and acceptance of salvageable waste donated to individuals and organizations. Indicate whether organization is tax exempt.

E. Records of Sales: Indicate receipt and acceptance of salvageable waste sold to individuals and organizations. Indicate whether organization is tax exempt.

F. Recycling and Processing Facility Records: Indicate receipt and acceptance of recyclable waste by recycling and processing facilities licensed to accept them. Include manifests, weight tickets, receipts, and invoices.

G. Landfill and Incinerator Disposal Records: Indicate receipt and acceptance of waste by landfills and incinerator facilities licensed to accept them. Include manifests, weight tickets, receipts, and invoices.

H. LEED Submittal: LEED letter template for Credit MR 2, signed by Contractor, tabulating total waste material, quantities diverted and means by which it is diverted, and statement that requirements for the credit have been met.

I. Qualification Data: For Waste Management Coordinator.

J. Statement of Refrigerant Recovery: Signed by refrigerant recovery technician responsible for recovering refrigerant, stating that all refrigerant that was present was recovered and that recovery was performed according to EPA regulations. Include name and address of technician and date refrigerant was recovered.

1.6 QUALITY ASSURANCE

A. Waste Management Coordinator Qualifications: LEED Accredited Professional by U.S. Green Building Council.

B. Refrigerant Recovery Technician Qualifications: Certified by EPA-approved certification program.

C. Regulatory Requirements: Comply with hauling and disposal regulations of authorities having jurisdiction.

D. Waste Management Conference: Conduct conference at Project site to comply with requirements in Division 01 Section "Project Management and Coordination." Meeting shall include contractors affected by the Waste Management Plan. Review methods and procedures related to waste management including, but not limited to, the following:

1. Review and discuss waste management plan including responsibilities of Waste Management Coordinator.

2. Review requirements for documenting quantities of each type of waste and its disposition.

3. Review and finalize procedures for materials separation and verify availability of containers and bins needed to avoid delays.

4. Review procedures for periodic waste collection and transportation to recycling and disposal facilities.

5. Review waste management requirements for each trade.

1.7 WASTE MANAGEMENT PLAN

A. General: Develop plan consisting of waste identification, waste reduction work plan, and cost/revenue analysis. For each material recycled or sent to a landfill from the project, include type of material waste or type of recycled material and the weight or volume of that material. Indicate quantities by weight or volume, but use same units of measure throughout waste management plan. Excavated soil, land-clearing debris and hazardous waste do not contribute to this credit.

B. Waste Identification: Indicate anticipated types and quantities of site-clearing and construction waste generated by the Work. Include estimated quantities and assumptions for estimates. Indicate whether the materials will be sorted on-site or comingled.

C. Waste Reduction Work Plan: List each type of waste and whether it will be salvaged, recycled, or disposed of in landfill or incinerator. Include points of waste generation, total quantity of each type of waste, quantity for each means of recovery, and handling and transportation procedures.

1. Salvaged Materials for Reuse: For materials that will be salvaged and reused in this Project, describe methods for preparing salvaged materials before incorporation into the Work.

2. Salvaged Materials for Sale: For materials that will be sold to individuals and organizations, include list of their names, addresses, and telephone numbers.

3. Salvaged Materials for Donation: For materials that will be donated to individuals and organizations, include list of their names, addresses, and telephone numbers.

4. Recycled Materials: Include list of local receivers and processors and type of recycled materials each will accept. Include names, addresses, and telephone numbers.

5. Disposed Materials: Indicate how and where materials will be disposed of. Include name, address, and telephone number of each landfill and incinerator facility.

6. Handling and Transportation Procedures: Include method that will be used for separating recyclable waste including sizes of containers, container labeling, and designated location on Project site where materials separation will be located.

D. Cost/Revenue Analysis: Indicate total cost of waste disposal as if there was no waste management plan and net additional cost or net savings resulting from implementing waste management plan. Include the following:

1. Total quantity of waste.

2. Estimated cost of disposal (cost per unit). Include hauling and tipping fees and cost of collection containers for each type of waste.

3. Total cost of disposal (with no waste management).

4. Revenue from salvaged materials.

5. Revenue from recycled materials.

6. Savings in hauling and tipping fees by donating materials.

7. Savings in hauling and tipping fees that are avoided.

8. Handling and transportation costs. Include cost of collection containers for each type of waste.

9. Net additional cost or net savings from waste management plan.

E. Forms: Prepare waste management plan on forms included at end of Part 3.

PART 2 - PRODUCTS (NOT USED)

PART 3 - EXECUTION

3.1 PLAN IMPLEMENTATION

A. General: Implement waste management plan as approved by Sustainable Design Consultant Provide handling, containers, storage, signage, transportation, and other items as required to implement waste management plan during the entire duration of the Contract.

1. Comply with Division 01 Section "Temporary Facilities and Controls" for operation, termination, and removal requirements.

B. Waste Management Coordinator: Engage a waste management coordinator to be responsible for implementing, monitoring, and reporting status of waste management work plan. The Waste Management Coordinator shall be responsible for instructing workers and overseeing and recording results of the Waste Management Plan. The Coordinator will maintain a log of way-bills, invoices and other documentation confirming that all materials have been hauled to the required locations. Coordinator shall be present at Project site full time for duration of Project.

C. Training: Train workers, subcontractors, and suppliers on appropriate separation, handling, and recycling to be used by all parties and proper waste management procedures, as appropriate for the Work occurring at Project site.

1. Distribute waste management plan to everyone concerned within three days of submittal return.

2. Distribute waste management plan to entities when they first begin work on-site. Review plan procedures and locations established for salvage, recycling, and disposal.

D. Site Access and Temporary Controls: Conduct waste management operations to ensure minimum interference with roads, streets, walks, walkways, and other adjacent occupied and used facilities.

1. Designate and label specific areas on Project site necessary for separating materials that are to be salvaged, recycled, reused, donated, and sold. Recycling and waste bin areas are to be kept neat and clean and clearly marked in order to avoid contamination of materials. Waste bins shall be labeled in English and in the language appropriate for those working on site.

2. To prevent contamination of materials to be recycled, materials will be handled consistent with requirements for acceptance by designated waste-disposal facilities. Where materials must be commingled they must be taken to a processing facility for separation off site.

3. Hazardous wastes: Hazardous wastes shall be separated, stored, and disposed of in accordance with the requirements of the authorities having jurisdiction, including Federal, State, County and City agencies.

4. Comply with Division 01 Section "Temporary Facilities and Controls" for controlling dust and dirt, environmental protection, and noise control.

3.2 SALVAGING DEMOLITION WASTE

A. Salvaged Items for Reuse in the Work:

1. Clean salvaged items.

2. Pack or crate items after cleaning. Identify contents of containers.

3. Store items in a secure area until installation.

4. Protect items from damage during transport and storage.

5. Install salvaged items to comply with installation requirements for new materials and equipment. Provide connections, supports, and miscellaneous materials necessary to make items functional for use indicated.

B. Salvaged Items for Sale and Donation: Not permitted on Project site.

C. Salvaged Items for Owner's Use:

1. Clean salvaged items.

2. Pack or crate items after cleaning. Identify contents of containers.

3. Store items in a secure area until delivery to Owner.

4. Transport items to Owner's storage area off-site designated by Owner.

5. Protect items from damage during transport and storage.

D. Doors and Hardware: Brace open end of door frames. Except for removing door closers, leave door hardware attached to doors.

3.3 RECYCLING CONSTRUCTION WASTE, GENERAL

A. General: Recycle paper and beverage containers used by on-site workers.

B. Recycling Receivers and Processors: List below is provided for information only; available recycling receivers and processors include, but are not limited to, the following:

1. City of Los Angeles Department of Public Works, Bureau of Sanitation Construction and Demolition Recycling Guide: http://www.lacity.org/san/solid_resources/pdfs/C&D_guide.pdf

C. Recycling Incentives: Revenues, savings, rebates, tax credits, and other incentives received for recycling waste materials shall accrue to Owner.

D. Procedures: Separate recyclable waste from other waste materials, trash, and debris. Separate recyclable waste by type at Project site to the maximum extent practical.

1. Provide appropriately marked containers or bins in two languages (English and Spanish) for controlling recyclable waste until they are removed from Project site. Include list of acceptable and unacceptable materials at each container and bin.

a. Inspect containers and bins for contamination and remove contaminated materials if found.

2. Stockpile processed materials on-site without intermixing with other materials. Place, grade, and shape stockpiles to drain surface water. Cover to prevent windblown dust.

3. Stockpile materials away from construction area. Do not store within drip line of remaining trees.

4. Store components off the ground and protect from the weather.

5. Remove recyclable waste off Owner's property and transport to recycling receiver or processor.

6. For comingled waste, include project-specific diversion rate provided by the sorting facility or the average annual recycling rate for the sorting facility provided by the regulating local or state government authority.

3.4 RECYCLING DEMOLITION WASTE

A. Asphaltic Concrete Paving: Grind asphalt to maximum 1-1/2-inch size.

1. Crush asphaltic concrete paving and screen to comply with requirements in Division 31 Section "Earth Moving" for use as general fill.

B. Asphaltic Concrete Paving: Break up and transport paving to asphalt-recycling facility.

C. Concrete: Remove reinforcement and other metals from concrete and sort with other metals.

1. Pulverize concrete to maximum 1-1/2-inch size.

2. Crush concrete and screen to comply with requirements in Division 31 Section "Earth Moving" for use as satisfactory soil for fill or subbase.

D. Masonry: Remove metal reinforcement, anchors, and ties from masonry and sort with other metals.

1. Pulverize masonry to maximum 1-1/2-inch size.

a. Crush masonry and screen to comply with requirements in Division 31 Section "Earth Moving" for use as general fill.
b. Crush masonry and screen to comply with requirements in Division 32 Section "Plants" for use as mineral mulch.

2. Clean and stack undamaged, whole masonry units on wood pallets.

E. Wood Materials: Sort and stack members according to size, type, and length. Separate lumber, engineered wood products, panel products, and treated wood materials.

F. Metals: Separate metals by type.

1. Structural Steel: Stack members according to size, type of member, and length.

2. Remove and dispose of bolts, nuts, washers, and other rough hardware.

G. Asphalt Shingle Roofing: Separate organic and glass-fiber asphalt shingles and felts. Remove and dispose of nails, staples, and accessories.

H. Gypsum Board: Stack large clean pieces on wood pallets and store in a dry location. Remove edge trim and sort with other metals. Remove and dispose of fasteners.

I. Acoustical Ceiling Panels and Tile: Stack large clean pieces on wood pallets and store in a dry location.

1. Separate suspension system, trim, and other metals from panels and tile and sort with other metals.

J. Carpet and Pad: Roll large pieces tightly after removing debris, trash, adhesive, and tack strips.

1. Store clean, dry carpet and pad in a closed container or trailer provided by Carpet Reclamation Agency or carpet recycler.

K. Equipment: Drain tanks, piping, and fixtures. Seal openings with caps or plugs. Protect equipment from exposure to weather.

L. Plumbing Fixtures: Separate by type and size.

M. Piping: Reduce piping to straight lengths and store by type and size. Separate supports, hangers, valves, sprinklers, and other components by type and size.

N. Lighting Fixtures: Separate lamps by type and protect from breakage.

O. Electrical Devices: Separate switches, receptacles, switchgear, transformers, meters, panelboards, circuit breakers, and other devices by type.

P. Conduit: Reduce conduit to straight lengths and store by type and size.

3.5 RECYCLING CONSTRUCTION WASTE

A. Packaging:

1. Cardboard and Boxes: Break down packaging into flat sheets. Bundle and store in a dry location.

2. Polystyrene Packaging: Separate and bag materials.

3. Pallets: As much as possible, require deliveries using pallets to remove pallets from Project site. For pallets that remain on-site, break down pallets into component wood pieces and comply with requirements for recycling wood.

4. Crates: Break down crates into component wood pieces and comply with requirements for recycling wood.

B. Site-Clearing Wastes: Chip brush, branches, and trees at landfill facility.

1. Comply with requirements in Division 32 Section "Plants" for use of chipped organic waste as organic mulch.

C. Wood Materials:

1. Clean Cut-Offs of Lumber: Grind or chip into small pieces.

2. Clean Sawdust: Bag sawdust that does not contain painted or treated wood.

a. Comply with requirements in Division 32 Section "Plants" for use of clean sawdust as organic mulch.

D. Gypsum Board: Stack large clean pieces on wood pallets and store in a dry location.

1. Clean Gypsum Board: Grind scraps of clean gypsum board using small mobile chipper or hammer mill. Screen out paper after grinding.

a. Comply with requirements in Division 32 Section "Plants" for use of clean ground gypsum board as inorganic soil amendment.

3.6 DISPOSAL OF WASTE

A. General: Except for items or materials to be salvaged, recycled, or otherwise reused, remove waste materials from Project site and legally dispose of them in a landfill or incinerator acceptable to authorities having jurisdiction.

1. Except as otherwise specified, do not allow waste materials that are to be disposed of accumulate on-site.

2. Remove and transport debris in a manner that will prevent spillage on adjacent surfaces and areas.

B. Burning: Do not burn waste materials.

C. Disposal: Transport waste materials and dispose of at designated spoil areas on Owner's property.

D. Disposal: Transport waste materials off Owner's property and legally dispose of them.

3.7 SAMPLE FORMS FOR RECYCLING AND WASTE

A. General: The following sample forms should be filled out for each item disposed of to a landfill or recycled. Units shall be by weight or volume, as long as they are consistent for both construction waste and materials that are recycling or salvaged.

B. Construction Waste Management Tracking Form

Unit of measurement:

Date	Ticket Number	Construction Waste Description	Diverted or Landfill or Comingled Waste	Total Waste	Hauler or Location	Percentage Diverted	Contribution
TOTAL CONSTRUCTION WASTE							
TOTAL WASTE DIVERTED							
TOTAL PERCENTAGE OF CONSTRUCTION WASTE DIVERTED FROM LANDFILL %							

END OF SECTION

SECTION 01 7516
STARTING OF SYSTEMS

PART 1 - GENERAL

1.1 SUMMARY

A. Section includes:

1. Starting systems.

2. Demonstration and instructions.

3. Testing, adjusting, and balancing.

B. Related work:

1. Section 01 7823 for system operation and maintenance data and extra materials.

1.2 STARTING SYSTEMS

A. Coordinate schedule for start-up of various equipment and systems.

B. Notify Architect 7 days prior to start-up of each item.

C. Verify that each piece of equipment or system has been checked for proper lubrication, drive rotation, belt tension, control sequence, or other conditions which may cause damage.

D. Verify that tests, meter readings, and specified electrical characteristics agree with those required by the equipment or system manufacturer.

E. Verify wiring and support components for equipment are complete and tested.

F. Execute start-up under supervision of responsible manufacturer's representative and Contractors' personnel in compliance with manufacturers' instructions.

G. When specified in individual specification Sections, require manufacturer to provide authorized representative to be present at site to inspect, check and approve equipment or system installation prior to start-up, and to supervise placing equipment or system in operation.

H. Submit a written report that equipment or system has been properly installed and is functioning correctly.

1.3 DEMONSTRATION/INSTRUCTIONS

A. Demonstrate operation and maintenance of products to City's personnel 14 days prior to date of Substantial Completion.

B. Demonstrate Project equipment instructed by a qualified manufacturers' representative knowledgeable about the Project.

C. For equipment or systems requiring seasonal operation, perform demonstration for other season within 6 months.

D. Utilize operation and maintenance manuals as basis for instruction. Review contents of manual with Citys' personnel in detail to explain all aspects of operation and maintenance.

E. Demonstrate start-up, operation, control, adjustment, trouble-shooting, servicing, maintenance, and shutdown of each item of equipment at scheduled at designated location.

F. Prepare and insert additional data in operations and maintenance manuals when need for additional data becomes apparent during instruction.

G. The amount of time required for instruction on each item of equipment and system is that specified in individual Sections.

END OF SECTION

• FILENAME \p Z:\SPECS\public\(1) CSI WORKFILES\TORRANCE TRANSIT\(10A) PHASE 1 - ROUGH GRADING - 09 01 15\01 7516 mac Starting of Systems.doc•

SECTION 01 7700
PROJECT CLOSEOUT

PART 1 - GENERAL

1.1 SUMMARY

A. Section includes:

1. When Contractor determines that the Project is substantially complete, Contractor shall:

a. Submit written certification to Architect that Project, or designated portion of Project, is substantially complete.

b. Submit list of major items to be completed or corrected (punch list).

c. Submit written certification that:

1) Contract Documents have been reviewed.

2) Project has been inspected for compliance with Contract Documents.

3) Work has been completed in accord with Contract Documents.

4) Equipment and systems have been tested in City's presence and are operational.

5) Project is completed, and ready for final review.

d. Determination that Project is, or is not substantially complete rests with the City and Architect.

B. The City and Architect will make a review of the Project, and if they determine that the Project is substantially complete they will advise the Contractor to prepare and submit to Architect a list of items to be completed or corrected, as determined by the review.

C. The City will then file and record a Notice of Completion to reduce the lien period to the time prescribed by law. The Notice of Completion shall be complete with signatures of the City and Contractor, accompanied by Contractor's list of items to be completed or corrected, as verified and amended by the Architect.

D. City occupancy of Project or designated portion of Project:

1. Contractor shall:

a. Obtain Certificate of Occupancy.

b. Perform final cleaning in compliance with Section 01 7400.

2. City will occupy project under provisions stated in Certificate of Substantial Completion.

3. Contractor shall complete work listed for completion or correction, within designated time.

1.2 CLOSEOUT SUBMITTALS

A. Submit the following:

1. Project record documents.

2. Final project photographs.

3. Operation and maintenance data.

4. Warranties and bonds.

5. Keys and keying schedules.

6. Tools, spare parts and maintenance materials.

7. Sustainable Design Documentation, training submittals and LEED Log Binder per Section 01 8113.

8. Commissioning Report as specified in Section 01 9113.

9. Approved pre-functional checklists and functional performance testing reports from the commissioning documentation.

B. Deliver evidence of compliance with requirements of governing authorities:

1. Certificates of inspection for mechanical and electrical work.

2. Certificate of Occupancy.

C. Deliver certificate of insurance for products and completed operations.

1.3 INSTRUCTIONS

A. Instruct City's designated personnel in operation of all systems, mechanical, electrical and other equipment.

1.4 EVIDENCE OF PAYMENTS, AND RELEASE OF LIENS

A. Submit Contractor's affidavit of payment of debts and claims and release of liens.

B. All submittals shall be duly executed before delivery to Architect.

1.5 FINAL ADJUSTMENT OF ACCOUNTS

A. Submit final statement of accounting to City. Statement shall reflect the following.

1. Original Contract Sum.

2. Additions and deductions resulting from changes to the authorized Contract sum.

3. Total Contract sum, as adjusted.

4. Previous payments.

5. Sum remaining due.

B. Final Change Order shall reflect approved adjustments to Contract sum not previously made by Change Orders.

1.6 FINAL APPLICATION FOR PAYMENT

A. Submit final application in compliance with Contract requirements.

END OF SECTION

• FILENAME \p Z:\SPECS\public\(1) CSI WORKFILES\TORRANCE TRANSIT\(10A) PHASE 1 - ROUGH GRADING - 09 01 15\01 7700 mac Project Closeout.doc•

SECTION 01 7823
OPERATING AND MAINTENANCE MANUALS

PART 1 - GENERAL

1.1 SUMMARY

A. Section includes:

1. Compilation of product data and related information appropriate for City's maintenance and operation of products furnished under the Contract.

2. Instruction of City's personnel in the maintenance of products and in the operation of equipment and systems.

B. Related work:

1. Section 01 3323 for submittals of shop drawings, product data and sample.

2. Section 01 7700 for contract closeout submittals.

3. Section 01 7836 for submittals of warranties and bond.

1.2 SUBMITTALS

A. Preliminary:

1. Submit 2 copies of proposed manual or manuals to the Architect for review and approval at least 15 days prior to request for final inspection or acceptance.

2. Show general arrangement, nature of contents in each portion, and proposed method of binding and covering for the manual.

B. Final:

1. Following instruction of operating and maintenance personnel, make necessary revisions of the manual.

2. Submit specified number of copies of approved data in final form at final inspection or acceptance.

1.3 QUALITY ASSURANCE

A. Preparation of data shall be done by personnel trained and experienced in maintenance and operation of the described products.

1.4 FORMAT

A. Prepare data in the form of an instruction manual for use by City's personnel.

B. Text: 20 lb. white bond paper, 8-1/2 -inch x 11 -inch

C. Drawings: Provide reinforced punched binder tab. Bind drawings with text.

1. Fan-fold larger drawings to size of text pages.

D. Flyleaf: For each separate product or each piece of operating equipment provide the following.

1. Brief description of product, and major component parts of equipment.

2. Indexed tabs.

E. Cover: Identify each volume with typed or printed tile **OPERATING AND MAINTENANCE INSTRUCTIONS**. List the following.

1. Title of Project.

2. Identity of separate structures as applicable.

3. A brief and general identification of the subject matter covered in the manual.

F. Binders:

1. Commercial quality D-ring type 3-ring binders with durable vinyl covers.

2. When multiple binders are used, correlate the data into related groupings.

G. Labels: Provide front and end spine labels for each manual clearly identified with the following information.

OPERATING AND MAINTENANCE INSTRUCTION
Name and address of Work
Name of Contractor
General subject of the manual
Space for approval date

1.5 CONTENT OF MANUAL

A. Table of contents:

1. List of each product required to be included, indexed to the content of the volume.

2. List, with each product, the name, address and telephone number of (a) subcontractor and installer, (b) maintenance contractor, as appropriate, and (c) local source of supply for parts and replacement.

B. Product data:

1. Include only those sheets pertinent to the specific product.

2. Annotate each sheet to clearly identify the data applicable to the installation. Delete references to inapplicable information.

C. Drawings: Supplement product date with drawings as necessary to illustrate the following.

1. Relations of component parts of equipment and systems.

2. Project record drawings shall not be used as maintenance drawings.

D. Instructions: Written text as required to supplement product data for the particular installation.

E. Copy of each warranty, guaranty, bond, and service contract issued. Provide information sheet for City's personnel, giving the following information:

1. Proper procedures in the event of failure or emergency.

2. Instances which might affect the validity of warranties, guaranties, or bonds.

1.6 MANUAL FOR MATERIALS AND FINISHES

A. Instructions for care and maintenance including:

1. Manufacturer's recommendation for types of cleaning agents and methods.

2. Cautions against cleaning agents and methods, which may be detrimental to the product.

3. Recommended schedule for cleaning and maintenance.

1.7 MANUAL FOR EQUIPMENT AND SYSTEMS

A. Content, for each unit of mechanical equipment and system, as appropriate:

1. Description of unit and component parts:

a. Function, normal operating characteristics, and limiting conditions.

b. Performance curves, engineering data and tests.

c. Complete nomenclature and commercial number of all replaceable parts.

2. Operating procedures:

a. Start-up, break-in, routine and normal operating instructions.

b. Regulation, control, stopping, shutdown and emergency instructions.

c. Summer and winter operating instructions.

3. Maintenance procedures:

a. Routine operations.

b. Guide to "trouble-shooting."

c. Disassembly, repair and reassembly.

d. Alignment, adjusting and checking.

4. Servicing and lubrication schedule: List of lubricants required.

5. Manufacturer's printed operating and maintenance instructions.

6. Description of sequence of operation by control manufacturer.

7. Original manufacturer's parts list, illustrations, assembly drawings and diagrams required for maintenance.

    a. Predicted life of parts subject to wear.

    b. Items recommended to be stocked as spare parts.

8. Control diagrams by manufacturer of controls as installed in Project.

9. Coordination drawings of color-coded piping diagrams as installed by each subcontractor.

10. Charts of valve tag numbers with the location and function of each valve.

11. List of original manufacturer's spare parts, manufacturer's current prices and recommended quantities to be maintained in storage.

B. Content, for each electric and electronic system, appropriate:

1. Description of system and component parts:

    a. Function, normal operating characteristics, and limiting conditions.

    b. Performance curves, engineering data and test.

    c. Complete nomenclature and commercial number of replaceable parts.

2. Circuit directories of panelboards:

    a. Electrical service.

    b. Controls.

    c. Communications.

3. As-installed color-coded wiring diagrams.

4. Operating procedures:

    a. Routine and normal operating instructions.

    b. Sequences required.

    c. Special operating instructions.

5. Maintenance procedures:

    a. Routine operations.

    b. Guide to "trouble-shooting."

    c. Disassembly, repair and reassembly.

    d. Adjustment and checking.

6. Manufacturer's printed operating and maintenance instructions.

C. Prepare and include additional data when the need for such data becomes apparent during instruction of City's personnel.

1.8 INSTRUCTION OF CITY'S PERSONNEL

A. Prior to final inspection or acceptance, instruct City's designated operating and maintenance personnel in the operation, adjustment and maintenance of all products, equipment, and systems installed in Project.

B. Provide services of factory-trained instructors from the manufacturer of each major item of equipment or system.

C. Operating and maintenance manual shall constitute the basis of instruction.

D. Review contents of manual(s) with personnel in full detail to explain all aspects of operations and maintenance.

END OF SECTION

• FILENAME \p Z:\SPECS\public\(1) CSI WORKFILES\TORRANCE TRANSIT\(10A) PHASE 1 - ROUGH GRADING - 09 01 15\01 7823 mac Operating and Maintenance Manuals.doc•

SECTION 01 7836
WARRANTIES AND BONDS

PART 1 - GENERAL

1.1 SUMMARY

A. Section includes:

1. Compile specified warranties and bonds, and specified service and maintenance contracts.

2. Review submittals to verify compliance with Contract Documents.

3. Submit to Architect for review and forwarding to City as specified in Section 01 7700.

B. Related work:

1. Refer to the General Conditions for terms of the Contractor's special warranty of workmanship and materials.

2. General closeout requirements are included in Section 01 7700.

3. Specific requirements for warranties for the Work and products and installations that are specified to be warranted, are included in Sections of Divisions 2 through 48.

4. Certifications and other commitments and agreements for continuing services to City are specified elsewhere in the Contract Documents.

C. Disclaimers and limitations: Manufacturer's disclaimers and limitations on product warranties do not relieve the Contractor of the warranty on the Work that incorporates the products, nor does it relieve suppliers, manufacturers and subcontractors required to countersign special warranties with the Contractor.

1.2 WARRANTY REQUIREMENTS

A. Related damages and losses: When correcting warranted work that has failed, remove and replace other work that has been damaged as a result of such failure or that must be removed and replaced to provide access for correction of warranted work.

B. Reinstatement of warranty: When work covered by a warranty has failed and been corrected by replacement or rebuilding, reinstate the warranty by written endorsement. The reinstated warranty shall be equal to the original warranty with an equitable adjustment for depreciation.

C. Replacement cost:

1. Upon determination that work covered by a warranty has failed, replace or rebuild the affected work to an acceptable condition complying with requirements of Contract Documents.

2. Contractor is responsible for the cost of replacing or rebuilding defective work regardless of whether the City has benefited from use of that work through a portion of its anticipated useful service life.

D. City's recourse:

1. Written warranties made to the City are in addition to implied warranties, and shall not limit the duties, obligations, rights and remedies otherwise available under the law, nor shall warranty periods be interpreted as limitations on obligations, rights, or remedies.

2. The City reserves the right to reject warranties and to limit selections to products with warranties not in conflict with requirements of the Contract Documents.

E. The City reserves the right to refuse to accept work for the Project where a special warranty, certification, or similar commitment is required on such work or part of the Work, until evidence is presented that entities required to countersign such commitments are willing to do so.

1.3 SUBMITTAL REQUIREMENTS

A. Assemble warranties, bonds, and service and maintenance contracts executed by each of the respective manufacturers, suppliers, and subcontractors.

B. Submit 2 original signed copies required.

C. Furnish a typed table of contents, in orderly sequence, with the following complete information for each item:

1. Product or assembly.

2. Firm, with name of principal, address and telephone number.

3. Scope.

4. Date of beginning of warranty, bond or service and maintenance contract.

5. Duration of warranty, bond or service maintenance contract.

6. Provide information for proper procedure to be followed in case of failure, and in instances which may affect the validity of warranty or bond.

7. Name of responsible principal of Contractor, and address and telephone number.

1.4 FORM OF SUBMITTALS

A. Prepare and bind in commercial quality D-ring type 3-ring binders with durable vinyl covers.

B. Format:

1. Size: 8-1/2 -inch by 11 -inch; punch sheets for standard 3-ring binder. Refer to warranty sample form below. Fold larger sheets to fit into binders.

2. Cover: Provide spine label clearly identified with **WARRANTIES AND BONDS**, title of Project and Contractor's name typed or printed.

1.5 TIME OF SUBMITTALS

A. For equipment or component parts of equipment put into service during construction, submit documents within 10 days after inspection and acceptance. Otherwise make submittals as specified in Section 01 7700.

B. For items whose acceptance is delayed materially beyond date of Substantial Completion, provide updated submittal within 10 days after acceptance, listing date of acceptance as start of warranty period.

1.6 WARRANTY FORM

A. Submit warranties on the form attached to this Section; this applies to Contractor and all subcontractors.

END OF SECTION

• FILENAME \p Z:\SPECS\public\(1) CSI WORKFILES\TORRANCE TRANSIT\(10A) PHASE 1 - ROUGH GRADING - 09 01 15\01 7836 mac Warranties and Bonds.doc•

SECTION 01 7837
WARRANTY FORM

(CONTRACTOR'S OR SUBCONTRACTOR'S LETTERHEAD)

Warranty for_____

We hereby warrant that all materials and equipment for the_____

which we have installed at_____
are new unless otherwise specified, and that all work is of good quality, free from faults and defects and in conformance with the contract documents. Work not conforming to these requirements, including substitutions not properly approved and authorized, may be considered defective.
If, within one year after the date of substantial completion of the work or designated portion thereof or within one year after acceptance by the City of designated equipment or within such longer period of time as may be prescribed by law or by the terms of any applicable special warranty required by the contract documents, any of the work is found to be defective or not in compliance with the contract documents, we agree to correct it promptly after receipt of a written notice from the City to do so unless the City has previously issued a written acceptance of such condition. This obligation shall survive termination of the contract.
If we fail to comply with the above paragraph within 7 days after receipt of written notice from the City to do so, or fail to pursue such compliance with diligence we, jointly and severally, do hereby authorize the City to proceed to have the defects repaired and made good at our sole expense including compensation for the architect's additional services made necessary by such default, and we will honor and pay the costs and charges for it together with interest at the maximum rate then permitted by governing state law, upon demand. If we fail to fulfill the preceding obligations, and if the City brings action to enforce this warranty, we agree to pay the City's reasonable attorney's fees incurred in connection therewith. This warranty is for _____ year(s).

Signed _____
(SUBCONTRACTOR)

Date _____
COUNTERSIGNED (GENERAL CONTRACTOR)

• FILENAME \p Z:\SPECS\public\(1) CSI WORKFILES\TORRANCE TRANSIT\(10A) PHASE 1 - ROUGH GRADING - 09 01 15\01 7837 mac Warranty Form.doc•

SECTION 01 7839
PROJECT RECORD DOCUMENTS

PART 1 - GENERAL

1.1 SUMMARY

A. Section includes:

1. General requirements for preparation, maintenance and delivery of record documents.

1.2 SUBMITTALS

A. Deliver record documents to Architect at completion of Project

B. Accompany submittal with transmittal letter, in duplicate, containing date, Project title and number, Contractor's name and address, title and number of each record document, certification that each document as submitted is complete and accurate, and signature of Contractor or its authorized representative.

PART 2 - PRODUCTS

NOT USED.

PART 3 - EXECUTION

3.1 DOCUMENT MAINTENANCE

A. Maintain one copy of the following in Contractor's field office at the site:

1. Contract Drawings, including the Building Department stamped set.

2. Specifications and Addenda.

3. Reviewed shop drawings.

4. Bulletins and change orders, field change authorization and notice of clarification, and other modifications to Contract.

5. Field test records.

B. File record documents apart from constructions documents and maintain in clean, dry, legible condition. Make record documents available for review by the City and Architect during regular business hours.

C. Do not use record documents for construction purpose.

D. Record documents will be subject to a monthly review by the Architect prior to approval of each progress payment.

3.2 RECORDING

A. Clearly label each document "**PROJECT RECORD**."

B. Keep record documents current.

C. Record and properly dimension deviations on the record drawings within 24 hours after work in affected area is completed. Dimensions shall be accurate to within 1 -inch

1. Use a fine felt or nylon tip pen with waterproof colored ink for marking.

2. Legibly mark to record actual construction of the following:

a. Depths of various elements of foundation in relation to first floor level.

b. Horizontal and vertical location of underground utilities and appurtenances referenced to permanent surface improvements. Cut-off points and point of connections of utilities.

c. Location of internal utilities and appurtenances concealed in construction referenced to visible and accessible features of structure.

d. Field changes of dimension and detail.

e. Changes made by Change Order, Field Change Authorization and Notice of Clarification.

f. Details not on original Contract Drawings.

g. Do not permanently conceal any work until required information has been recorded.

D. Legibly mark-up each Section of the Specifications to record the following:

1. Manufacturer, trade name, catalog number, and supplier of each product and item of equipment installed.

2. Changes made by change order, field change authorization and notice of clarification.

3. Other matters not originally specified.

E. Maintain shop drawings as record documents. Legibly annotate to record changes made after approval.

F. Submit Record Documents to Architect as specified in Section 01 7700.

3.3 CAD FILES

A. For the work listed below, submit record shop drawings prepared electronically using the latest version of AutoCAD.

B. Each portion of the work listed below shall be included in its own layer (or layers) within the electronic file. Provide DVD floppy disks with these files to the Architect for forwarding to the City.

C. Index each files with layering reference guide and reference file matrix.

D. Work to be included in CAD files:

1. Fire protection.

2. Plumbing.

3. HVAC.

4. Electrical power.

5. Lighting.

6. Fire alarm.

7. Telecommunications systems.

8. Audio visual systems.

9. Site utilities.

END OF SECTION

• FILENAME \p Z:\SPECS\public\(1) CSI WORKFILES\TORRANCE TRANSIT\(10A) PHASE 1 - ROUGH GRADING - 09 01 15\01 7839 mac Project Record Documents.doc•

SECTION 01 8113
SUSTAINABLE DESIGN REQUIREMENTS

PART 1 - GENERAL

1.1 RELATED DOCUMENTS

A. Drawings, Contract Forms, Conditions of the Contract including Construction Manager/General Contractor (CMGC) Agreement, General Conditions and Supplementary General Conditions, and including Exhibits and other Division 1 Specification Sections, apply to this Section.

1.2 SUMMARY

A. This Section includes general requirements and procedures for compliance with certain U.S. Green Building Council's (USGBC) LEED prerequisites and credits needed for the Project to obtain LEED certification.
   1. Other LEED prerequisites and credits needed to obtain LEED certification are dependent on material selections and may not be specifically identified as LEED requirements. Compliance with requirements needed to obtain LEED prerequisites and credits may be used as one criterion to evaluate substitution requests.
   2. Additional LEED prerequisites and credits needed to obtain the indicated LEED certification are dependent on the Project's design and other aspects that are not part of the Work of the Contract.

B. Related Sections include the following:
   1. Divisions 02 through 46 Sections for LEED requirements specific to the Work of each of those Sections. These requirements may or may not include reference to LEED.

1.3 DEFINITIONS

A. Certificates of Chain-of-Custody: Certificates signed by manufacturers certifying that wood used to make products was obtained from forests certified by an FSC-accredited certification body to comply with FSC 1.2, "Principles and Criteria." Certificates shall include evidence that mill is certified for chain-of-custody by an FSC-accredited certification body.

B. LEED: Leadership in Energy & Environmental Design

C. CFC/HCFC: Chlorofluorocarbons/Hydrochlorofluorocarbons

D. FSC: Forest Stewardship Council

E. GPM/GPF: Gallons per minute/Gallons per flush

F. IAQ: Indoor air quality

G. IEQ: Indoor environmental Quality

H. MERV: Minimum efficiency reporting value

I. MSDS: Material Safety Data Sheet

J. Regional Materials: Materials that are manufactured and extracted, harvested, and recovered within a radius of 500 miles from the Project location.

K. Recycled Content: The percentage by weight of constituents that have been recovered or otherwise diverted from the solid waste stream, either during the manufacturing process (pre-consumer), or after consumer use (post-consumer). As defined by the International Organization for Standardization document, *ISO 14021- Environmental labels and declarations-Self-declared environmental claims (Type II environmental labeling)*
   1. Post-consumer material: waste material generated by households or by commercial, industrial, and institutional facilities in their role as end-users of the product, which can no longer be used for its intended purpose.
   2. Pre-consumer material: material diverted from the waste stream during the manufacturing process. Excluded is reutilization of materials such as rework, regrind, or scrap generated in a process and capable of being reclaimed within the same process that generated it.

1.4 SUBMITTALS

A. General: Submit additional LEED submittal requirements included in other sections of the Specifications.

B. LEED submittals are in addition to other submittals. If submitted item is identical to that submitted to comply with other requirements, submit duplicate copies as a separate submittal to verify compliance with indicated LEED requirements. LEED submittals shall be submitted using forms provided by Sustainable Design Consultant.

C. LEED Action Plans: Provide preliminary submittals within 30 days of date established for the Notice of Award indicating how the following requirements will be met.
   1. Credit MR 2: Waste management plan complying with Section 01 74 19 "Construction Waste Management and Disposal."
   2. Credit MR 4: List of proposed materials with recycled content. Indicate cost, post-consumer recycled content, and pre-consumer recycled content for each product having recycled content.
   3. Credit MR 5: List of proposed regional materials. Identify each regional material, including its source, cost, and the fraction by weight that is considered regional.
   4. Credit MR 7: List of proposed certified wood products. Indicate each product containing certified wood, including its source and cost of certified wood products.
   5. Credit IEQ 3.1: Construction indoor-air-quality management plan.

D. Project Materials Cost Data: Provide statement indicating total cost for building materials used for Project. Include statement indicating total cost of mechanical and electrical components.

E. Project Materials Tracking Worksheets: Provide statement indicating manufacturer, product, cost, and percentage weight for materials contributing to LEED MR Credit 4: Recycled Content, MR Credit 5: Regional Materials, MR Credit 6: Rapidly Renewable Materials, and MR Credit 7: Certified Wood. See LEED action plan for additional requirements.

F. LEED Log Binder: Maintain a binder, digital or hard copy, divided by LEED Category and credit number, for those credits described in this section. The environmental features described below shall be circled. Contractor shall make the LEED Log Binder accessible at all times and update it weekly as new products are ordered and submit an electronic copy of this binder to the Sustainable Design Consultant prior to each site visit. Submit final LEED Log Binder as part of project close-out requirements. Contractor is only responsible for collecting the required submittal information described in detail below and for putting these submittals into the LEED Log Binder:
   1. Credit MRc2:
      a. Construction waste management plan complying with Division 01 Section "Construction Waste Management and Disposal" prior to start of construction.
      b. Current construction waste diversion percentage.

c. Haul tickets from waste vendor verifying quantity of waste disposed of and/or diverted (quantity shall be in either weight or volume but must be consistent throughout the project scope).

2. Credit MRc4: List of proposed materials with recycled content.
   a. Indicate cost, post-consumer recycled content, and pre-consumer recycled content by percentage based on weight for each product having recycled content.
   b. Product cut sheets and/or MSDS for each product contributing towards credit highlighting applicable sustainable properties.
3. Credit MRc5: List of proposed materials manufactured and extracted, harvested, or recovered within:
   a. OPTION 1:
      1) 500 miles of project site
   b. OPTION 2:
      1) Total travel distance to the project site as calculated using a weighted average determined through the formula:
         (Distance by rail/3) + (Distance by inland waterway/2) + (Distance by sea/15) + (Distance by all other means) • 500 miles.

      2) Identify each regional material, distance from the location of manufacture and extraction, harvest, or recovery, or travel distance by rail, inland waterway, sea or all other means by percentage based on weight, and cost.
   c. Product cut sheets and/or MSDS for each product contributing towards credit highlighting applicable sustainable properties.
4. Credit MRc7: List of proposed Forest Stewardship Council (FSC) certified wood products.
   a. Include vendor invoice for all wood products indicating on a line item basis product type, manufacturer, and cost. For all FSC certified products vendor invoices shall also include Forest Steward Ship Council Chain of Custody (COC) certification number and shall state whether the product is “FSC Pure,” “FSC Mixed Credit,” or “FSC Mixed [NN]%.” Invoices for FSC certified products shall be supplemented by a letter from the vendor stating the products are FSC certified.
   b. Include statement indicating total cost for all wood-based materials used for Project, including only wood materials that are permanently installed in the project.
   c. Include Product Material Tracking Worksheets for MRc7 indicating cost for all wood materials, percentage FSC based on weight, volume, or cost and COC certification number for all FSC certified products.
   d. Product cut sheets and/or MSDS for each product contributing towards credit highlighting applicable sustainable properties.
5. Credit IEQc3.1:
   a. Construction indoor air quality management plan prior to start of construction.
   b. Minimum of eighteen photographs – six taken at three different occasions during construction – and identification of the IAQ management approach illustrated in the photo, such as protection of ducts or storage of absorptive materials. Photographs must illustrate and indicate all five SMACNA IAQ management approaches (HVAC Protection, Source Control, Pathway Interruption, Housekeeping, and Scheduling). Photographs must be date stamped.
6. Credit IEQc4.1: List for adhesives and sealants used on the interior of the building
   a. Indicate VOC content in g/L calculated according to 40 CFR 59, Subpart D (EPA method 24) of each product.
7. Credit IEQc4.2: Product List for paints and coatings used on the interior of the building
   a. Indicate VOC content in g/L calculated according to 40 CFR 59, Subpart D (EPA method 24) of each product.
   b. Product cut sheets and/or MSDS for each product contributing towards credit highlighting applicable sustainable properties.

8. Credit IEQc4.3: List all carpet, carpet cushion and hard surface flooring.
    a. OPTION 1:
        1) Indicate carpet products are Carpet and Rug Institute's Green Label Plus Certified.
        2) Indicate carpet cushion products are Carpet and Rug Institute's Green Label certified.
        3) Indicate Data compliance with the FloorScore standard (current as of the date of the rating system, or more stringent version) by an independent third-party for all hard surface flooring.
        4) Indicate VOC content in g/L for concrete, wood, bamboo and cork floor finishes such as sealer, stain and finish calculated according to 40 CFR 59, Subpart D (EPA method 24) of each product.
        5) Indicate VOC content in g/L for tile setting adhesives and grout calculated according to 40 CFR 59, Subpart D (EPA method 24) of each product.
    b. OPTION 2:
        1) Compliance with testing and product requirements of the California Department of Health Services Standard Practice for the Testing of Volatile Organic Emissions from Various Sources Using Small-Scale Environmental Chambers, including 2004 Addenda
    c. Product cut sheets and/or MSDS for each product contributing towards credit highlighting applicable sustainable properties.
9. Credit IEQc4.4: List all agrifiber and composite wood products.
    a. Indicate statement verifying that these contain no urea-formaldehyde resin.
    b. Product cut sheets and/or MSDS for each product contributing towards credit highlighting applicable sustainable properties.

G. LEED Progress Reports: Concurrent with each Application for Payment, submit reports comparing actual construction and purchasing activities with LEED action plans for the following:
    1. Credit MR 2: Waste reduction progress reports complying with Division 01 Section "Construction Waste Management and Disposal."
    2. Credit MR 4: Current recycled content percentage.
    3. Credit MR 5: Current percentage of regionally manufactured and extracted, harvested, or recovered materials.
    4. Credit MRc7: Current percentage of FSC certified wood.

H. LEED Documentation Submittals: Provide submittals within 30 days of receipt for the following items:
    1. Credit SSc7.1: Product Data for paving materials indicating Solar Reflectance Index.
    2. Credit SSc7.2: Product Data for roofing materials indicating Solar Reflectance Index.
    3. Credit WEc3: Product Data for plumbing fixtures (water closets, faucets, lavatories, and urinals) indicating water consumption in terms of gpf or gpm.
    4. Prerequisite EAc3: Product Data for new HVAC equipment indicating absence of CFC refrigerants.
    5. Credit EAc4: Product Data for new HVAC equipment indicating the absence of refrigerants or the ozone depletion potential and global warming potential of refrigerants.
    6. Credit EAc1: Product data for glazing indicating properties of glazing (U-value, solar heat gain coefficient, and visible light transmittance). Product data for all insulation indicating R-Value per inch and thickness (or total R-Value) and location of insulation in building. Product data for efficiency of HVAC equipment for heating, cooling, and domestic hot water.
    7. Credit EAc5: Product Data and wiring diagrams for sensors and data collection system used to provide continuous metering of building energy and water consumption performance over time.
    8. Credit MRc2: Comply with Division 01 Section "Construction Waste Management and Disposal."

9. Credit MRc4: Product Data and certification letter indicating percentages by weight of post-consumer and pre-consumer recycled content for products having recycled content. Include statement indicating costs for each product having recycled content.
    a. Include Product Material Tracking Worksheets for MRc4 indicating costs.
10. Credit MRc5: Product Data indicating location of material manufacturer and location of material extraction/harvesting/recovering for regional materials.
    a. OPTION 1:
        1) Include statement indicating cost and distance from manufacturer to Project for each regionally manufactured material.
        2) Include statement indicating cost and distance from point of extraction, harvest, or recovery to Project for each raw material used in regionally manufactured materials.
    b. OPTION 2:
        1) Include statement in cost and travel modes with distances from manufacturer to Project for each regionally manufactured material
        2) Include statement indicating cost and travel modes with distances from point of extraction, harvest, or recovery to Project for each raw material used in regionally manufactured materials.
    c. If only a fraction of the material is extracted/harvested/recovered and manufactured locally, then indicate percentage by weight of material.
    d. Include Product Material Tracking Worksheets for MR 5.1 and 5.2 indicating costs and weights of each regional material.
11. Credit MRc7: Product Data and certificates of chain-of-custody for products containing certified wood.
    a. Include statement indicating product type, manufacturer, and costs for each product containing certified wood.
    b. Include statement indicating total cost for all wood-based materials used for Project, including only wood materials that are permanently installed in the project.
    c. Include Forest Steward Ship Council Chain of Custody certification number for all FSC certified projects.
    d. Include Product Material Tracking Worksheets for MRc7 indicating cost for each material.
12. Credit IEQc1: Product Data and Shop Drawings for carbon dioxide monitoring system and/or outdoor air monitoring station.
13. Credit IEQc3.1:
    a. Construction Indoor Air Quality (IAQ) management plan.
    b. Product Data for temporary MERV 8 filtration media.
    c. Construction Documentation: Minimum of eighteen photographs – six taken at three different occasions during construction – and identification of the IAQ management approach illustrated in the photo, such as protection of ducts or storage of absorptive materials. Photographs must illustrate and indicate all five SMACNA IAQ management approaches (HVAC Protection, Source Control, Pathway Interruption, Housekeeping, and Scheduling). Photographs must be date stamped.
14. Credit IEQc3.2:
    a. Signed statement describing the building air flush-out procedures including the dates when flush-out was begun and completed and statement that filtration media was replaced prior to flush-out. Provide documentation for humidity and temperature conditions inside and outside the building during the entire duration of flushout.

    AND
    b. Product Data for MERV 8 filtration media used during flush-out.

    OR

c. Report from testing and inspecting agency indicating results of IAQ testing and documentation showing conformance with IAQ testing procedures and requirements.

15. Credit IEQc4.1:
    a. Product Data for adhesives and sealants used on the interior of the building indicating VOC content of each product used. Indicate VOC content in g/L calculated according to 40 CFR 59, Subpart D (EPA method 24).
    b. Determine product category of each adhesive or sealant based on the following referenced standards:
        1) South Coast Air Quality Management District (SCAQMD) Rule 1168, effective July 1, 2005 and amendment effective January 7, 2005.
        2) Green Seal Standard for Commercial Adhesives GS-36, effective on October 19, 2000.
16. Credit IEQc4.2:
    a. Product Data for paints and coatings used on the interior of the building indicating chemical composition and VOC content of each product used. Indicate VOC content in g/L calculated according to 40 CFR 59, Subpart D (EPA method 24).
    b. Determine product category of each paint or coating based on the following referenced standards:
        1) Green Seal Standard GS-11, Paints, First Edition, May 20, 1993.
        2) Green Seal Standard GC-03, Anti-Corrosive Paints, Second Edition, January 7, 1997.
        3) South Coast Air Quality Management District (SCAQMD) Rule 1113, Architectural Coatings, effective January 1, 2004.
17. Credit IEQc4.3:
    a. OPTION 1:
        1) Product Data for carpet products indicating compliance with the testing and product requirements of the Carpet and Rug Institute's Green Label Plus Program.

           OR

           Product Data for carpet products indicating maximum VOC concentrations are less than or equal to those specified in the California Department of Health Services Standard Practice for the Testing of Volatile Organic Emissions from Various Sources Using Small-Scale Environmental Chambers, including 2004 Addenda, using the office scenario as defined in Table 7.5 within the practice. The additional VOC concentration limits listed in Section 9.1a is also met. Maximum VOC concentrations meet the California requirements specified above based on the following
           a) California Department of Public Health (CDPH) Standard Method V1.1-2010 using test results obtained at the 14 day time point.
        2) Product Data for carpet cushion products indicating compliance with the testing and product requirements of the Carpet and Rug Institute's Green Label Program.
        3) Product Data for carpet and carpet cushion adhesive indicating compliance with requirement of IEQc4.1: Adhesives and Sealants, which includes a volatile organic compound (VOC) limit of 50g/L.
        4) Product Data for all hard surface flooring indicating compliance with the FloorScore standard (current as of the date of the rating system, or more stringent version) by an independent third-party.

           OR

           Product Data for indicating maximum VOC concentrations are less than or equal to those specified in the California Department of Health Services

Standard Practice for the Testing of Volatile Organic Emissions from Various Sources Using Small-Scale Environmental Chambers, including 2004 Addenda, using the office scenario as defined in Table 7.5 within the practice. Maximum VOC concentrations meet the California requirements specified above based on the following

a) California Department of Public Health (CDPH) Standard Method V1.1-2010 using test results obtained at the 14 day time point.

Mineral based finish flooring products such as tile, masonry, terrazzo, and cut stone without integral organic-based coatings and sealants and unfinished/untreated solid wood flooring qualify for credit without any IAQ testing requirements. However, associated site-applied adhesives, grouts, finishes and sealers must be compliant for a mineral-based or unfinished/untreated solid wood flooring system to qualify for credit.

5) Product Data for all concrete, bamboo, wood, and cork floor finishes (sealer, stain, finish etc.) Floor finishes such as sealer, stain and finish indicating compliance with the requirements of South Coast Air Quality Management District (SCAQMD) Rule 1113, Architectural Coatings, effective January 1, 2004.

6) Product Data for all tile setting adhesives and grout indicating compliance with South Coast Air Quality Management District (SCAQMD) Rule 1168, effective July 1, 2005 and amendment effective January 7, 2005.

7) For carpet adhesive, concrete, wood, bamboo and cork floor finishes, and tile setting adhesives, compliance can be demonstrated with test results of:

a) Total volatiles fraction, based on one of the following, provided that water and exempt compounds are subtracted from total volatiles test results and the mass VOC content is calculated consistent with SCAQMD Rule 1113 and Rule 1168:

b) ASTM D2369

c) EPA method 24

d) ISO 11890 part 1

b) Total volatile organic compounds fraction, based on one of the following, provided that all VOCs with a boiling point up to 280°C (536°F) are included, and exempt compounds are subtracted from total volatiles test results and the mass VOC content is calculated consistent with SCAQMD Rule 1113 and Rule 1168.

c) ASTM D6886

d) ISO 11890 part 2

b. OPTION 2:

1) Product Data for all flooring elements installed in the building interior indicating results of the testing and product requirements of the California Department of Health Services Standard Practice for the Testing of Volatile Organic Emissions from Various Sources Using Small-Scale Environmental Chambers, including 2004 Addenda. Mineral-based finish flooring products such as tile, masonry, terrazzo, and cut stone without integral organic based coatings and sealants and unfinished/untreated solid wood flooring qualify for credit without any IAQ testing requirements.

c. Product Data for associated site-applied adhesives, grouts, finishes and sealers for a mineral-based or unfinished/untreated solid wood flooring system to qualify for credit.

18. IEQc4.4:

a. Product Data for composite wood and agrifiber products indicating that products contain no urea-formaldehyde resin.

1) Include statement indicating adhesives and binders used for each product.

b. Product Data for all laminating adhesives used to fabricate on-site and shop applied composite wood and agrifiber assemblies indicating that they do not contain added urea-formaldehyde resins.

19. Credit IEQc5: Product Data for entryway grille. Product Data for MERV 13 filtration media used during occupancy.
20. Credit IEQc6.1 and 6.2: Product Data and Shop Drawings for sensors and control system used to monitor and control room temperature and lighting.

I. LEED-Online Documentation Submittals: Contractor is responsible for documenting all the contractor related credits and or prerequisites which the project is pursuing for its desired LEED certification as identified in the LEED Checklist provided in the specifications. All contractor related credits and prerequisites must be documented through LEED-Online utilizing the LEED Credit Templates including all supporting documentation as required to complete credit and prerequisite documentation. Contractor will also be required to respond to clarifications and appeals if requested by the GBCI construction submittal review team.

PART 2 - PRODUCTS

2.1 RECYCLED CONTENT OF MATERIALS

A. Credit MRc4: Provide building materials with recycled content such that post-consumer recycled content plus one-half of pre-consumer recycled content constitutes a minimum of 20 percent of the cost of materials used for the Project.
1. The cost of post-consumer recycled content of an item shall be determined by dividing the weight of post-consumer recycled content in the item by the total weight of the item and multiplying by the cost of the item.
2. The cost of post-consumer recycled content plus one-half of pre-consumer recycled content of an item shall be determined by dividing the weight of post-consumer recycled content plus one-half of pre-consumer recycled content in the item by the total weight of the item and multiplying by the cost of the item.
3. Do not include mechanical and electrical components in the calculation.
4. Recycled content of materials shall be defined according to the International Organization for Standardization document, *ISO 14021- Environmental labels and declarations- Self-declared environmental claims (Type II environmental labeling)*

2.2 REGIONAL MATERIALS

A. Credit MRc5: Provide 10 percent of building materials (by cost) that are:
1. OPTION 1:
a. Regionally manufactured materials and regionally extracted, harvested, or recovered
2. OPTION 2:
a. Building materials shipped by rail or water have been extracted, harvested or recovered, as well as manufactured within a 500 mile total travel distance of the project site calculated using a weighted average determined through the following formula:
(Distance by rail/3) + (Distance by inland waterway/2) + (Distance by sea/15) + (Distance by all other means) • 500 miles

2.3 CERTIFIED WOOD

A. Credit MRc7: Provide a minimum of 50 percent (by cost) of wood-based materials that are produced from wood obtained from forests certified by an FSC-accredited certification body to comply with FSC 1.2, "Principles and Criteria."
1. Wood-based materials include but are not limited to the following materials when made from made wood, engineered wood products, or wood-based panel products:

a. Rough carpentry.
b. Miscellaneous carpentry.
c. Heavy timber construction.
d. Wood decking.
e. Metal-plate-connected wood trusses.
f. Structural glued-laminated timber.
g. Finish carpentry.
h. Architectural woodwork.
i. Wood paneling.
j. Wood veneer wall covering.
k. Wood flooring.
l. Wood lockers.
m. Wood cabinets.

2.4 LOW-EMITTING MATERIALS

A. Credit IEQc4.1:

1. For interior applications use adhesives and sealants that comply with the following limits for VOC content when calculated according to 40 CFR 59, Subpart D (EPA method 24)

Architectural Applications	VOC Limit (g/L less water)	Specialty Applications	VOC Limit (g/L less water)
Indoor carpet adhesives	50	PVC welding	510
Carpet pad adhesives	50	CPVC welding	490
Wood flooring adhesives	100	ABS welding	325
Rubber floor adhesives	60	Plastic cement welding	250
Subfloor adhesives	50	Adhesive primer for plastic	550
Ceramic tile adhesives	65	Contact adhesive	80
VCT and asphalt adhesives	50	Special purpose contact adhesive	250
Drywall and panel adhesives	50	Structural wood member adhesive	140
Cove base adhesives	50	Sheet applied rubber lining operations	850
Multipurpose construction adhesives	70	Top and trim adhesive	250
Structural glazing adhesives	100		
Substrate Specific Applications	**VOC Limit (g/L less water)**	**Sealants**	**VOC Limit (g/L less water)**
Metal to metal	30	Architectural	250
Plastic foams	50	Roadway	250
Porous material (except wood)	50	Other	420
Wood	30		
Fiberglass	80		
Sealant Primers	**VOC Limit (g/L less water)**		
Architectural, nonporous	250		
Architectural, porous	775		
Other	750		

2. Aerosol adhesives must comply with the following VOC limits

Aerosol Adhesives	VOC Limit
General purpose mist spray	65% VOCs by weight
General purpose web spray	55% VOCs by weight
Special purpose aerosol adhesives (all types)	70% VOCs by weight

B. Credit IEQc4.2:

1. For interior applications use paints and coatings that comply with the following limits for VOC content when calculated according to 40 CFR 59, Subpart D (EPA method 24) and the following chemical restrictions:

Paints	VOC weight in grams/liter of product minus water
Non-flat[a] Flat	150 50

[a] If the manufacturer has not characterized the paint as to gloss, the specular gloss level at 60¡ will be determined. Flat paints are those which register less than 5 and non-flat paints are those which register a 5 or greater. The gloss reading will be determined by ASTM D523-89, Standard Test Method for Specular Gloss.

Anti-Corrosive or Anti-Rust Paints	VOC Limit (grams per liter of product, minus water)
Gloss Semi-Gloss Flat	250 250 250

Coating Category	VOC Limit*	Coating Category	VOC Limit*
Bond Breakers	350	Pre-Treatment Wash Primers	420
Clear Wood Finishes	350	Primers, Sealers, and Undercoaters	200
Varnish	350	Quick-Dry Enamels	250
Sanding Sealers	350	Quick-Dry Primers, Sealers, and Undercoaters	200
Lacquer	550	Recycled Coatings	250
Clear Brushing Lacquer	680	Roof Coatings	250
Concrete-Curing Compounds	350	Roof Coatings, Aluminum	500
Concrete-Curing Compounds For Roadways and Bridges	350	Roof Primers, Bituminous	350
		Shellac	
Dry-Fog Coatings	400	Clear	730
Fire-Proofing Exterior Coatings	350	Pigmented	550
Fire-Retardant Coatings		Specialty Primers	350
Clear	650	Stains	250
Pigmented	350	Stains, Interior	250
Floor Coatings	100	Swimming Pool Coatings	
Graphic Arts (Sign) Coatings	500	Repair	340
Industrial Maintenance (IM) Coatings	250	Other	340
High Temperature IM Coatings	420	Traffic Coatings	150
Zinc-Rich IM Primers	340	Waterproofing Sealers	250
Japans/Faux Finishing Coatings	350	Waterproofing Concrete/Masonry Sealers	400
Mastic Coatings	300	Wood Preservatives	
Metallic Pigmented Coatings	500	Below-Ground	350
Multi-Color Coatings	250	Other	350
Pigmented Lacquer	550	*g/L less water and less exempt compounds	

Coating Category	VOC Limit (g/L)
Low-Solids Coating	120

2. Aromatic Compounds: Paints and coatings shall not contain more than 1.0 percent by weight total aromatic compounds (hydrocarbon compounds containing one or more benzene rings).
3. Restricted Components: Paints and coatings shall not contain any of the following:
   a. Acetone.

b. Acrolein.
c. Acrylonitrile.
d. Antimony.
e. Benzene.
f. Butyl benzyl phthalate.
g. Cadmium.
h. DEHP.
i. Di (2-ethylhexyl) phthalate.
j. Di-n-butyl phthalate.
k. Di-n-octyl phthalate.
l. 1,2-dichlorobenzene.
m. Dichloromethane.
n. Diethyl phthalate.
o. Dimethyl phthalate.
p. Dioxin.
q. Ethylbenzene.
r. Formaldehyde.
s. Hexavalent chromium.
t. Isophorone.
u. Lead.
v. Mercury.
w. Methyl ethyl ketone.
x. Methyl isobutyl ketone.
y. Methylene chloride.
z. Naphthalene.
aa. Toluene (methylbenzene).
bb. 1,1,1-trichloroethane.
cc. Vinyl chloride.
dd. 4-PC.

C. Credit IEQc4.3

1. OPTION 1

a. All carpet installed in the building interior shall meet one of the following requirements:

1) The testing and product requirements of the Carpet and Rug Institute Green Label Plus program.

OR

Maximum VOC concentrations are less than or equal to those specified in the California Department of Health Services Standard Practice for the Testing of Volatile Organic Emissions from Various Sources Using Small-Scale Environmental Chambers, including 2004 Addenda, using the office scenario as defined in Table 7.5 within the practice. The additional VOC concentration limits listed in Section 9.1a shall also be met.

a) Maximum VOC concentrations meet the California requirements specified above based on the following:

b) California Department of Public Health (CDPH) Standard Method V1.1-2010 using test results obtained at the 14 day time point

b. All carpet cushion installed in the building interior shall meet the requirements of the Carpet and Rug Institute Green Label program.

c. All carpet adhesive shall meet the requirements of IEQ Credit 4.1: Adhesives and Sealants, which includes a volatile organic compound (VOC) limit of 50 g/L (0.4 lb/gal).

d. All hard surface flooring installed in the building interior shall meet one of the following requirements:
   1) The requirements of the FloorScore standard (current as of the date of this rating system, or more stringent version) as shown with testing by an independent third-party.

      OR

      Maximum VOC concentrations less than or equal to those specified in the California Department of Health Services Standard Practice for the Testing of Volatile Organic Emissions from Various Sources Using Small-Scale Environmental Chambers, including 2004 Addenda, using the office scenario as defined in Table 7.5 within the practice.
      a) Maximum VOC concentrations meet the California requirements specified above based on the following:
         b) California Department of Public Health (CDPH) Standard Method V1.1-2010 using test results obtained at the 14 day time point
e. Mineral based finish flooring products such as tile, masonry, terrazzo, and cut stone without integral organic-based coatings and sealants and unfinished/untreated solid wood flooring qualify for credit without any IAQ testing requirements. However, associated site-applied adhesives, grouts, finishes and sealers shall be compliant for a mineral-based or unfinished/untreated solid wood flooring system to qualify for credit.
f. Concrete, wood, bamboo and cork floor finishes such as sealer, stain and finish shall meet the requirements of South Coast Air Quality Management District SCAQMD) Rule 1113, Architectural Coatings, rules in effect on January 1, 2004.
g. Tile setting adhesives and grout shall meet South Coast Air Quality Management District (SCAQMD) Rule 1168. VOC limits correspond to an effective date of July 1, 2005 and rule amendment date of January 7, 2005.
h. For carpet adhesive, concrete, wood, bamboo and cork floor finishes, and tile setting adhesives, compliance shall be demonstrated with test results of:
   1) Total volatiles fraction, based on one of the following, provided that water and exempt compounds are subtracted from total volatiles test results and the mass VOC content is calculated consistent with SCAQMD Rule 1113 and Rule 1168:
      a) ASTM D2369
      b) EPA method 24
      c) ISO 11890 part 1
   2) Total volatile organic compounds fraction, based on one of the following, provided that all VOCs with a boiling point up to 280°C (536°F) are included, and exempt compounds are subtracted from total volatiles test results and the mass VOC content is calculated consistent with SCAQMD Rule 1113 and Rule 1168.
      a) ASTM D6886
      b) ISO 11890 part 2

2. OPTION 2
   a. All flooring elements installed in the building interior shall meet the testing and product requirements of the California Department of Health Services Standard Practice for the Testing of Volatile Organic Emissions from Various Sources Using Small-Scale Environmental Chambers, including 2004 Addenda. Mineral-based finish flooring products such as tile, masonry, terrazzo, and cut stone without integral organic based coatings and sealants and unfinished/untreated solid wood flooring qualify for credit without any IAQ testing requirements. However, associated site-applied adhesives, grouts, finishes and sealers shall be compliant

for a mineral-based or unfinished/untreated solid wood flooring system to qualify for credit.

D. Credit IEQc4.4: Do not use composite wood and agrifiber products that contain urea-formaldehyde resin.

PART 3 - EXECUTION

3.1 SITE DISTURBANCE

A. SS Prerequisite 1: Comply with 2003 EPA Construction General Permit or local erosion and sedimentation control standards and codes, whichever is more stringent.

B. Credit SS 5.1: Comply with requirements of Division 01 Section "Summary."

3.2 CONSTRUCTION WASTE MANAGEMENT

A. Credit MR 2.1 and 2.2: Comply with Division 01 Section "Construction Waste Management and Disposal."

3.3 CONSTRUCTION INDOOR AIR QUALITY MANAGEMENT

A. Credit EQ 3.1: Comply with SMACNA IAQ Guideline for Occupied Buildings under Construction.
   1. During construction meet or exceed the recommended Control Measures of the Sheet Metal and Air Conditioning National Contractors Association (SMACNA) IAQ Guidelines for Occupied Buildings under Construction, 2nd Edition 2007, ANSI / SMACNA 008-2008 (Chapter 3) , as summarized below:
      a. HVAC Protection – Use temporary heaters whenever feasible. Seal all duct and equipment openings with plastic. If permanently installed air handlers are used during construction, filtration media with a Minimum Efficiency Reporting Value (MERV) of 8, as determined by ASHRAE 52.2-1999, shall be used over each return air grille. Replace all filtration media immediately prior to occupancy. All leaks in ducts and air handlers should be repaired promptly.
      b. Source Control – For Contractor information, all paints, carpet, caulks, adhesives, sealants are specified as low-VOC and non-toxic. Recover, isolate and ventilate containers housing toxic materials. Avoid exhaust fumes from idling vehicles and gasoline fueled tools.
      c. Pathway Interruption – During construction, isolate areas of work to prevent contamination of clean or spaces. Ventilate using 100% outside air to exhaust contaminated air directly to the outside during installation of VOC emitting materials. Use pressure differentials or barriers between work and clean areas to prevent contaminated air from entering clean areas.
      d. Housekeeping – Protect building materials from weather and store in a clean area prior to unpacking for installation. Clean all coils, air filters, and fans before performing testing and balancing procedures. Institute cleaning activities designed to control contaminants in building spaces.
      e. Scheduling – Complete applications of wet and odorous materials such as VOCs in paints, sealants, and coatings before installing absorbing materials such as ceiling tiles, carpets, insulation, gypsum products, and fabric-covered furnishings. Avoid exposure of all interior materials to moisture.
   2. Protect stored on-site or installed absorptive materials from moisture damage.
   3. If owner authorizes the use of permanent heating, cooling, and ventilating systems during construction period as specified in Division 01 Section "Temporary Facilities and Controls," install filter media having a MERV 8 according to ASHRAE 52.2-1999 at each return-air inlet for the air-handling system used during construction. Replace all filtration

media with filter media having a MERV 13 according to ASHRAE 52.2-1999 immediately prior to occupancy.

B. IEQc3.2: Contractors option: Either flush-out or air contaminant testing is required, not both.

1. Flush-out:
   a. Perform building flush-out prior to occupancy and after all construction work including punch-list items, is compete, all cleaning has been finalized, test and balance of HVAC systems is complete, HVAC control is functional, and new filtration media has been installed.
   b. Perform a building flush-out by supplying a total air volume of 14,000 cu.ft. of outdoor air per sq.ft. of floor area while maintaining an internal temperature of at least 60 degrees F and relative humidity no higher than 60%. Interior environmental conditions must be monitored and recorded during the flushout to confirm the temperature and humidity requirements have been met.
   c. If interior spaces must be occupied prior to completion of the flush-out, supply a minimum of 3,500 cu.ft. of outdoor air per sq.ft. of floor area prior to occupancy and provide minimum outside air volume rate of 0.30 cfm per square foot or design minimum outside air rate, whichever is greater. During an occupied flush-out, the minimum ventilation rate must begin at least 3 hours before daily occupancy and continue while the space is occupied.
2. Air contaminant testing:
   a. Perform air contaminant testing prior to occupancy, after interior finishes are installed, HVAC system has been tested, adjusted, and balanced, and new HVAC filtration media has been installed. Collect indoor air samples representative of occupied areas. Collect samples at outside air intake of each air handler at the same time as indoor samples are taken. Analyze air samples and submit report. If air samples show concentrations higher than those specified, ventilate with 100% outside air and retest, or conduct full building flushout as specified above.
   b. Air Contaminant Concentration Determination and Limits:

Contaminant	Maximum Concentration	EPA Compendium method	ISO method
Formaldehyde	27 parts per billion	IP-6	ISO 16000-3
Particulates (PM10)	50 micrograms per cubic meter	IP-10	ISO 7708
Total volatile organic compounds (TVOCs)	500 micrograms per cubic meter	IP-1	ISO 16000-6
4-Phenylcyclohexene (4-PCH)*	6.5 micrograms per cubic meter	IP-1	ISO 16000-6
Carbon monoxide (CO)	9 part per million and no greater than 2 parts per million above outdoor levels	IP-3	ISO 4224
* This test is only required if carpets and fabrics with styrene butadiene rubber (SBR) latex backing are installed as part of the base building systems.			

   c. For each sampling point where the maximum concentration limits are exceeded, conduct additional flush-out with outside air and retest the specific parameter(s) exceeded to indicate the requirements are achieved. Repeat procedure until all requirements have been met. When retesting non-complying building areas, take samples from same locations as in the first test.
   d. Air-sample testing shall be conducted as follows:
      1) All measurements shall be conducted prior to occupancy but during normal occupied hours, and with building ventilation system starting at the normal daily start time and operated at the minimum outside air flow rate for the occupied mode throughout the duration of the air testing.
      2) Building shall have all interior finishes installed including, but not limited to, millwork, doors, paint, carpet, and acoustic tiles. Non-fixed furnishings such as workstations and partitions are encouraged, but not required, to be in place for the testing.
      3) Number of sampling locations varies depending on the size of building and number of ventilation systems. For each portion of building served by a separate ventilation system, the number of sampling points shall not be less than one per 25,000 sq. ft. or for each contiguous floor area, whichever is

larger, and shall include areas with the least ventilation and greatest presumed source strength.

4) Air samples shall be collected between 3 and 6 feet from the floor to represent the breathing zone of occupants, and over a minimum four hour period.

END OF SECTION

LEED for New Construction and Major Renovation 2009

Project: Torrance Transit Park and Ride Regional Terminal
Date: 5/22/13
Goal: Gold

Yes	SM	WM	No	N/A					
69	6		31	4		**Project Totals** (pre-certification estimates)		110 Points	
						Certified 40-49 Silver 50-59 points Gold 60-79 points Platinum 80-110 points		d = Design Submittal c = Construction Submittal	
38			9			**Project Information (PI)** - Required		Champion	LEED-Online Champion
Y					PIF1	**Minimum Project Requirements** (P)	d	COT	COT
Y					PIF2	**Project Summary Details** (P)	d	FRWA / PSOMAS/ AHBE	FRWA / PSOMAS/ AHBE
Y					PIF3	**Occupant and Usage Data** (P)	d	FRWA / Ambient Energy / DWE	FRWA / Ambient Energy / DWE
Y					PIF4	**Schedule and Overview Documents** (P)	d	FRWA / DWE / PSOMAS	FRWA / DWE / PSOMAS
21			5			**Sustainable Sites (SS)** - 26 Points Available		Champion	LEED-Online Champion
Y					SSp1	**Construction Activity Pollution Prevention** (P)	c	PSOMAS / Contractor	Contractor
1					SSc1	**Site Selection** (1)	d	PSOMAS	PSOMAS
5					SSc2	**Development Density & Community Connectivity** (5)	d	Ambient Energy	Ambient Energy
			1		SSc3	**Brownfield Redevelopment** (1)	d		
6					SSc4.1	**Alternative Transportation**, Public Transportation Access (6)	d	Ambient Energy	Ambient Energy
1					SSc4.2	**Alternative Transportation**, Bicycle Storage & Changing Rooms (1)	d	FRWA / AHBE	FRWA
3					SSc4.3	**Alternative Transportation**, Low-Emitting & Fuel-Efficient Vehicles (3)	d	FRWA	FRWA
			2		SSc4.4	**Alternative Transportation**, Parking Capacity (2)	d		
			1		SSc5.1	**Site Development,** Protect or Restore Habitat (1)	c		
1					SSc5.2	**Site Development,** Maximize Open Space (1)	d	AHBE	AHBE
1					SSc6.1	**Stormwater Design,** Quantity Control (1)	d	PSOMAS	PSOMAS
1					SSc6.2	**Stormwater Design,** Quality Control (1)	d	PSOMAS	PSOMAS
1					SSc7.1	**Heat Island Effect,** Non-Roof (1)	c	AHBE	AHBE
1					SSc7.2	**Heat Island Effect,** Roof (1)	d	FRWA	FRWA
			1		SSc8	**Light Pollution Reduction** (1)	d		
6			4			**Water Efficiency (WE)** - 10 Points Available		Champion	LEED-Online Champion
Y					WEp1	**20% Water Use Reduction** (P)	d	DWE	DWE
4					WEc1	**Water Efficient Landscaping** (2-4)	d	AHBE	AHBE
			2		WEc2	**Innovative Wastewater Technologies** (2)	d		
2			2		WEc3	**Water Use Reduction** (2-4)	d	DWE	DWE
21	2		12			**Energy & Atmosphere (EA)** -35 Points Available		Champion	LEED-Online Champion
Y					EAp1	**Fundamental Commissioning of the Building Energy Systems** (P)	c	Ambient Energy	Ambient Energy
Y					EAp2	**Minimum Energy Performance** (P)	d	DWE	DWE
Y					EAp3	**Fundamental Refrigerant Management** (P)	d	DWE	DWE
14	2		3		EAc1	**Optimize Energy Performance** (1-19)	d	DWE	DWE
2			5		EAc2	**On-Site Renewable Energy** (1-7)	d	DWE	DWE
2					EAc3	**Enhanced Commissioning** (2)	c	Ambient Energy	Ambient Energy
			2		EAc4	**Enhanced Refrigerant Management** (2)	d		
1			2		EAc5	**Measurement & Verification** (3)	c	COT / DWE	DWE
2					EAc6	**Green Power** (2)	c	COT / DWE	DWE

Yes	SM	WM	No	N/A				
6	1		3	4		**Materials & Resources (MR)** - 14 Points Available		**Champion**
Y					MRp1	**Storage & Collection of Recyclables** (P)	d	FRWA / Ambient Energy
				3	MRc1.1	**Building Reuse**, Maintain Existing Walls, Floors & Roof (1-3)	c	
				1	MRc1.2	**Building Reuse**, Maintain Interior Non-Structural Elements (1)	c	
2					MRc2	**Construction Waste Management** (1-2)	c	Contractor / FRWA
			2		MRc3	**Materials Reuse** (1-2)	c	
2					MRc4	**Recycled Content** (1-2)	c	Contractor / FRWA
1	1				MRc5	**Regional Materials** (1-2)	c	Contractor / FRWA
			1		MRc6	**Rapidly Renewable Materials,** 2.5% (1)	c	
1					MRc7	**Certified Wood,** 50% (1)	c	Contractor / FRWA

Yes	SM	WM	No	N/A				
11	1	3				**Indoor Environmental Quality (IEQ)** -15 Points Available		**Champion**
Y					IEQp1	**Minimum IAQ Performance** (P)	d	Gotama
Y					IEQp2	**Environmental Tobacco Smoke** (ETS) **Control** (P)	d	COT / FRWA / AHBE / Ambient Energy
1					IEQc1	**Outdoor Air Delivery Monitoring** (1)	d	Gotama
		1			IEQc2	**Increased Ventilation** (1)	d	Gotama
1					IEQc3.1	**Construction IAQ Management Plan**, During Construction (1)	c	Contractor
1					IEQc3.2	**Construction IAQ Management Plan**, Before Occupancy (1)	c	Contractor / Gotama
1					IEQc4.1	**Low-Emitting Materials**, Adhesives & Sealants (1)	c	Contractor
1					IEQc4.2	**Low-Emitting Materials**, Paints & Coatings (1)	c	Contractor / FRWA
1					IEQc4.3	**Low-Emitting Materials**, Flooring Systems (1)	c	Contractor / FRWA
1					IEQc4.4	**Low-Emitting Materials**, Composite Wood & Agrifiber Products (1)	c	Contractor / FRWA
	1				IEQc5	**Indoor Chemical & Pollutant Source Control** (1)	d	FRWA / Gotama
1					IEQc6.1	**Controllability of Systems**, Lighting (1)	d	Gotama / COT
		1			IEQc6.2	**Controllability of Systems**, Thermal Comfort (1)	d	Gotama
1					IEQc7.1	**Thermal Comfort**, Design (1)	d	Gotama
1					IEQc7.2	**Thermal Comfort**, Verification (1)	d	COT / Ambient Energy
		1			IEQc8.1	**Daylight & Views**, Daylight 75% of Spaces (1)	d	FRWA
1					IEQc8.2	**Daylight & Views**, Views for 90% of Spaces (1)	d	FRWA

Yes	SM	WM	No	N/A				
5						**Innovation & Design Process (ID)** - 6 Points Available		**Champion**
1					IDc1.1	**Innovation in Design**: Credit exceedance SSc4.1 (1)	d	Ambient Energy
1					IDc1.2	**Innovation in Design**: Sustainable Education (1)	d	COT / FRWA / Ambient Energy
1					IDc1.3	**Innovation in Design:** Green Cleaning (1)	d	Ambient Energy / COT
1					IDc1.4	**Innovation in Design**: Pilot Credit (1)	d	TBD
					IDc1.5	**Innovation in Design**: Carbon footprint for taking the bus (1)	d	FRWA / Ambient Energy / COT
1					IDc2	**LEED® Accredited Professional** (1)	c	Ambient Energy

Yes	SM	WM	No	N/A				
1		2	1			**Regional Priority (RP)** - 4 Points Available		**Champion**
1					RPc1.1	**Regional Priority:** SSc5.2 Site Development, Maximize Open Space (1)	d	FRWA
		1			RPc1.2	**Regional Priority:** EQc8.1 Daylight & Views, Daylight 75% of Spaces (1)	d	FRWA
		1			RPc1.3	**Regional Priority:** WEc3 Water Use Reduction, 40% (1)	d	Gotama
			1		RPc1.4	**Regional Priority:** EAc2 On-Site Renewable Energy, 1% (1)	d	
					Alt.	**Regional Priority:** WEc2 Innovative Wastewater Technologies (1)	d	
					Alt.	**Regional Priority:** MRc1.1 Building Reuse, Maintain Existing Walls, Floors & Roof, 55% (1)	d	

SECTION 31 1000
SITE CLEARING

PART 1 - GENERAL

1.1 SUMMARY

A. Section includes:

1. Protecting existing vegetation to remain.

2. Removing existing vegetation.

3. Clearing and grubbing.

4. Stripping and stockpiling topsoil.

5. Removing above- and below-grade site improvements.

6. Disconnecting, capping or sealing, and removing site utilities or abandoning site utilities in place.

7. Temporary erosion- and sedimentation-control measures.

B. Related work:

1. Section 01 5000 "Temporary Facilities and Controls" for temporary utility services, construction and support facilities, security and protection facilities.

2. Section 01 7300 "Execution" for field engineering and surveying.

3. Section 02 4116 "Structure Demolition" for demolition of buildings, structures, and site improvements.

1.2 DEFINITIONS

A. Subsoil: All soil beneath the topsoil layer of the soil profile, and typified by the lack of organic matter and soil organisms.

B. Surface Soil: Soil that is present at the top layer of the existing soil profile at the Project site. In undisturbed areas, the surface soil is typically topsoil; but in disturbed areas such as urban environments, the surface soil can be subsoil.

C. Topsoil: Top layer of the soil profile consisting of existing native surface topsoil or existing in-place surface soil and is the zone where plant roots grow.

D. Topsoil: Top layer of the soil profile consisting of existing native surface topsoil or existing in-place surface soil and is the zone where plant roots grow. Its appearance is generally friable, pervious, and black or a darker shade of brown, gray, or red than underlying subsoil; reasonably free of subsoil, clay lumps, gravel, and other objects more than 2 inches in diameter; and free of subsoil and weeds, roots, toxic materials, or other non-soil materials.

E. Plant-Protection Zone: Area surrounding individual trees, groups of trees, shrubs, or other vegetation to be protected during construction, and indicated on Drawings.

F. Tree-Protection Zone: Area surrounding individual trees or groups of trees to be protected during construction, and indicated on Drawings.

G. Vegetation: Trees, shrubs, groundcovers, grass, and other plants.

1.3 MATERIAL OWNERSHIP

A. Except for stripped topsoil and other materials indicated to be stockpiled or otherwise remain City's property, cleared materials shall become Contractor's property and shall be removed from Project site.

1.4 INFORMATIONAL SUBMITTALS

A. Existing Conditions: Documentation of existing trees and plantings, adjoining construction, and site improvements that establishes preconstruction conditions that might be misconstrued as damage caused by site clearing.

1. Use sufficiently detailed photographs or videotape.

2. Include plans and notations to indicate specific wounds and damage conditions of each tree or other plants designated to remain.

B. Record Drawings: Identifying and accurately showing locations of capped utilities and other subsurface structural, electrical, and mechanical conditions.

1.5 QUALITY ASSURANCE

A. Preinstallation Conference: Conduct conference at Project site.

1.6 PROJECT CONDITIONS

A. Traffic: Minimize interference with adjoining roads, streets, walks, and other adjacent occupied or used facilities during site-clearing operations.

1. Do not close or obstruct streets, walks, or other adjacent occupied or used facilities without permission from City and authorities having jurisdiction.

2. Provide alternate routes around closed or obstructed traffic ways if required by City or authorities having jurisdiction.

B. Improvements on Adjoining Property: Authority for performing site clearing indicated on property adjoining City's property will be obtained by City before award of Contract.

1. Do not proceed with work on adjoining property until directed by Architect.

C. Salvable Improvements: Carefully remove items indicated to be salvaged and store on City's premises where indicated.

D. Utility Locator Service: Notify utility locator service for area where Project is located before site clearing.

E. Do not commence site clearing operations until temporary erosion- and sedimentation-control measures are in place.

F. The following practices are prohibited within protection zones:

1. Storage of construction materials, debris, or excavated material.

2. Parking vehicles or equipment.

3. Foot traffic.

4. Erection of sheds or structures.

5. Impoundment of water.

6. Excavation or other digging unless otherwise indicated.

7. Attachment of signs to or wrapping materials around trees or plants unless otherwise indicated.

G. Do not direct vehicle or equipment exhaust towards protection zones.

H. Prohibit heat sources, flames, ignition sources, and smoking within or near protection zones.

I. Soil Stripping, Handling, and Stockpiling: Perform only when the topsoil is dry or slightly moist.

PART 2 - PRODUCTS

2.1 MATERIALS

A. Satisfactory Soil Material: Requirements for satisfactory soil material are specified in Section 31 2000 "Earth Moving."

1. Obtain approved borrow soil material off-site when satisfactory soil material is not available on-site.

PART 3 - EXECUTION

3.1 PREPARATION

A. Protect and maintain benchmarks and survey control points from disturbance during construction.

B. Locate and clearly identify trees, shrubs, and other vegetation to remain.

C. Protect existing site improvements to remain from damage during construction.

1. Restore damaged improvements to their original condition, as acceptable to City.

3.2 TEMPORARY EROSION AND SEDIMENTATION CONTROL

A. Provide temporary erosion- and sedimentation-control measures to prevent soil erosion and discharge of soil-bearing water runoff or airborne dust to adjacent properties and walkways, according to erosion- and sedimentation-control Drawings and requirements of authorities having jurisdiction.

B. Verify that flows of water redirected from construction areas or generated by construction activity do not enter or cross protection zones.

C. Inspect, maintain, and repair erosion- and sedimentation-control measures during construction until permanent vegetation has been established.

D. Remove erosion and sedimentation controls and restore and stabilize areas disturbed during removal.

3.3 TREE AND PLANT PROTECTION

A. General: Protect trees and plants remaining on-site according to requirements in Section 01 5639 "Temporary Tree and Plant Protection."

B. Repair or replace trees, shrubs, and other vegetation indicated to remain or be relocated that are damaged by construction operations, in a manner approved by Architect.

3.4 EXISTING UTILITIES

A. Locate, identify, disconnect, and seal or cap utilities indicated to be removed or abandoned in place.

1. Arrange with utility companies to shut off indicated utilities.

B. Interrupting Existing Utilities: Do not interrupt utilities serving facilities occupied by City or others unless permitted under the following conditions and then only after arranging to provide temporary utility services according to requirements indicated:

1. Notify Architect not less than two days in advance of proposed utility interruptions.

2. Do not proceed with utility interruptions without Architect's written permission.

C. Excavate for and remove underground utilities indicated to be removed.

3.5 CLEARING AND GRUBBING

A. Remove obstructions, trees, shrubs, and other vegetation to permit installation of new construction.

1. Do not remove trees, shrubs, and other vegetation indicated to remain or to be relocated.

2. Grind down stumps and remove roots, obstructions, and debris to a depth of 18 inches below exposed subgrade.

3. Use only hand methods for grubbing within protection zones.

4. Chip removed tree branches and dispose of off-site.

B. Fill depressions caused by clearing and grubbing operations with satisfactory soil material unless further excavation or earthwork is indicated.

1. Place fill material in horizontal layers not exceeding a loose depth of 8 inches, and compact each layer to a density equal to adjacent original ground.

3.6 TOPSOIL STRIPPING

A. Remove sod and grass before stripping topsoil.

B. Strip topsoil to depth indicated on Drawings in a manner to prevent intermingling with underlying subsoil or other waste materials.

1. Remove subsoil and nonsoil materials from topsoil, including clay lumps, gravel, and other objects more than 2 inches in diameter; trash, debris, weeds, roots, and other waste materials.

C. Stockpile topsoil away from edge of excavations without intermixing with subsoil. Grade and shape stockpiles to drain surface water. Cover to prevent windblown dust and erosion by water.

1. Limit height of topsoil stockpiles to 72 inches.

2. Do not stockpile topsoil within protection zones.

3. Dispose of surplus topsoil. Surplus topsoil is that which exceeds quantity indicated to be stockpiled or reused.

4. Stockpile surplus topsoil to allow for respreading deeper topsoil.

3.7 SITE IMPROVEMENTS

A. Remove existing above- and below-grade improvements as indicated and necessary to facilitate new construction.

B. Remove slabs, paving, curbs, gutters, and aggregate base as indicated.

1. Unless existing full-depth joints coincide with line of demolition, neatly saw-cut along line of existing pavement to remain before removing adjacent existing pavement. Saw-cut faces vertically.

2. Paint cut ends of steel reinforcement in concrete to remain with two coats of antirust coating, following coating manufacturer's written instructions. Keep paint off surfaces that will remain exposed.

3.8 DISPOSAL OF SURPLUS AND WASTE MATERIALS

A. Remove surplus soil material, unsuitable topsoil, obstructions, demolished materials, and waste materials including trash and debris, and legally dispose of them off City's property.

END OF SECTION

SECTION 31 2000
EARTH MOVING

PART 1 - GENERAL

1.1 SUMMARY

A. Section includes:

1. Preparing subgrades for slabs-on-grade walks pavements turf and grasses and plants.

2. Excavating and backfilling for buildings and structures.

3. Drainage course for concrete slabs-on-grade.

4. Subbase course for concrete walks pavements.

5. Subbase course and base course for asphalt paving.

6. Subsurface drainage backfill for walls and trenches.

7. Excavating and backfilling trenches for utilities and pits for buried utility structures.

B. Related work:

1. Section 01 3200 "Construction Progress Documentation" and Section 01 3233 "Photographic Documentation" for recording pre-excavation and earth moving progress.

2. Section 01 5000 "Temporary Facilities and Controls" for temporary controls, utilities, and support facilities; also for temporary site fencing if not in another Section.

3. Section 03 3000 "Cast-in-Place Concrete" for granular course if placed over vapor retarder and beneath the slab-on-grade.

4. Section 31 1000 "Site Clearing" for site stripping, grubbing, stripping and stockpiling topsoil, and removal of above- and below-grade improvements and utilities.

5. Section 31 2319 "Dewatering" for lowering and disposing of ground water during construction.

6. Section 31 5000 "Excavation Support and Protection" for shoring, bracing, and sheet piling of excavations.

7. Section 31 6329 "Drilled Concrete Piers and Shafts" for excavation of shafts and disposal of surplus excavated material.

8. Section 32 9200 "Turf and Grasses" for finish grading in turf and grass areas, including preparing and placing planting soil for turf areas.

9. Section 32 9300 "Plants" for finish grading in planting areas and tree and shrub pit excavation and planting.

10. Section 33 4600 "Subdrainage" for drainage of foundations slabs-on-grade walls and landscaped areas.

1.2 UNIT PRICES

A. Work of this Section is affected by unit prices for earth moving specified in Section 01 2200 "Unit Prices."

B. Quantity allowances for earth moving are included in Section 01 2100 "Allowances."

C. Rock Measurement: Volume of rock actually removed, measured in original position, but not to exceed the following. Unit prices for rock excavation include replacement with approved materials.

1. 24 inches outside of concrete forms other than at footings.

2. 12 inches outside of concrete forms at footings.

3. 6 inches outside of minimum required dimensions of concrete cast against grade.

4. Outside dimensions of concrete walls indicated to be cast against rock without forms or exterior waterproofing treatments.

5. 6 inches beneath bottom of concrete slabs-on-grade.

6. 6 inches beneath pipe in trenches, and the greater of 24 inches wider than pipe or 42 inches wide.

1.3 DEFINITIONS

A. Backfill: Soil material or controlled low-strength material used to fill an excavation.

1. Initial Backfill: Backfill placed beside and over pipe in a trench, including haunches to support sides of pipe.

2. Final Backfill: Backfill placed over initial backfill to fill a trench.

B. Base Course: Aggregate layer placed between the subbase course and hot-mix asphalt paving.

C. Bedding Course: Aggregate layer placed over the excavated subgrade in a trench before laying pipe.

D. Borrow Soil: Satisfactory soil imported from off-site for use as fill or backfill.

E. Drainage Course: Aggregate layer supporting the slab-on-grade that also minimizes upward capillary flow of pore water.

F. Excavation: Removal of material encountered above subgrade elevations and to lines and dimensions indicated.

1. Authorized Additional Excavation: Excavation below subgrade elevations or beyond indicated lines and dimensions as directed by Architect. Authorized additional excavation and replacement material will be paid for according to Contract provisions for unit prices.

2. Bulk Excavation: Excavation more than 10 feet in width and more than 30 feet in length.

3. Unauthorized Excavation: Excavation below subgrade elevations or beyond indicated lines and dimensions without direction by Architect. Unauthorized excavation, as well as remedial work directed by Architect, shall be without additional compensation.

G. Fill: Soil materials used to raise existing grades.

H. Rock: Rock material in beds, ledges, unstratified masses, conglomerate deposits, and boulders of rock material that exceed 1 cu. yd. for bulk excavation or 3/4 cu. yd. for footing, trench, and pit excavation that cannot be removed by rock excavating equipment equivalent to the following in size and performance ratings, without systematic drilling, ram hammering, ripping, or blasting, when permitted:

1. Excavation of Footings, Trenches, and Pits: Late-model, track-mounted hydraulic excavator; equipped with a 42-inch wide, maximum, short-tip-radius rock bucket; rated at not less than 138-hp flywheel power with bucket-curling force of not less than 28,700 lbf and stick-crowd force of not less than 18,400 lbf with extra-long reach boom; measured according to SAE J-1179.

2. Bulk Excavation: Late-model, track-mounted loader; rated at not less than 230-hp flywheel power and developing a minimum of 47,992-lbf breakout force with a general-purpose bare bucket; measured according to SAE J-732.

I. Rock: Rock material in beds, ledges, unstratified masses, conglomerate deposits, and boulders of rock material 3/4 cu. yd. or more in volume that exceed a standard penetration resistance of 100 blows/2 inches when tested by a geotechnical testing agency, according to ASTM D 1586.

J. Structures: Buildings, footings, foundations, retaining walls, slabs, tanks, curbs, mechanical and electrical appurtenances, or other man-made stationary features constructed above or below the ground surface.

K. Subbase Course: Aggregate layer placed between the subgrade and base course for hot-mix asphalt pavement, or aggregate layer placed between the subgrade and a cement concrete pavement or a cement concrete or hot-mix asphalt walk.

L. Subgrade: Uppermost surface of an excavation or the top surface of a fill or backfill immediately below subbase, drainage fill, drainage course, or topsoil materials.

M. Utilities: On-site underground pipes, conduits, ducts, and cables, as well as underground services within buildings.

1.4 ACTION SUBMITTALS

A. Product Data: For each type of the following manufactured products required:

1. Geotextiles.

2. Controlled low-strength material, including design mixture.

3. Geofoam.

4. Warning tapes.

B. Samples for Verification: For the following products, in sizes indicated below:

1. Geotextile: 12 by 12 inches.

2. Warning Tape: 12 inches long; of each color.

1.5 INFORMATIONAL SUBMITTALS

A. Qualification Data: For qualified testing agency.

B. Material Test Reports: For each on-site and borrow soil material proposed for fill and backfill as follows:

1. Classification according to ASTM D 2487.

2. Laboratory compaction curve according to ASTM D 1557.

C. Preexcavation Photographs or Videotape: Show existing conditions of adjoining construction and site improvements, including finish surfaces, that might be misconstrued as damage caused by earth moving operations. Submit before earth moving begins.

1.6 QUALITY ASSURANCE

A. Geotechnical Testing Agency Qualifications: Qualified according to ASTM E 329 and ASTM D 3740 for testing indicated.

B. Preexcavation Conference: Conduct conference at Project site.

1.7 PROJECT CONDITIONS

A. Traffic: Minimize interference with adjoining roads, streets, walks, and other adjacent occupied or used facilities during earth moving operations.

1. Do not close or obstruct streets, walks, or other adjacent occupied or used facilities without permission from City and authorities having jurisdiction.

2. Provide alternate routes around closed or obstructed traffic ways if required by City or authorities having jurisdiction.

B. Improvements on Adjoining Property: Authority for performing earth moving indicated on property adjoining City's property will be obtained by City before award of Contract.

1. Do not proceed with work on adjoining property until directed by Architect.

C. Utility Locator Service: Notify utility locator service for area where Project is located before beginning earth moving operations.

D. Do not commence earth moving operations until temporary erosion- and sedimentation-control measures, specified in Section 01 5000 "Temporary Facilities and Controls" and Section 31 1000 "Site Clearing," are in place.

E. Do not commence earth moving operations until plant-protection measures specified in Section 01 5639 "Temporary Tree and Plant Protection" are in place.

F. The following practices are prohibited within protection zones:

1. Storage of construction materials, debris, or excavated material.

2. Parking vehicles or equipment.

3. Foot traffic.

4. Erection of sheds or structures.

5. Impoundment of water.

6. Excavation or other digging unless otherwise indicated.

7. Attachment of signs to or wrapping materials around trees or plants unless otherwise indicated.

G. Do not direct vehicle or equipment exhaust towards protection zones.

H. Prohibit heat sources, flames, ignition sources, and smoking within or near protection zones.

PART 2 - PRODUCTS

2.1 SOIL MATERIALS

A. General: Provide borrow soil materials when sufficient satisfactory soil materials are not available from excavations.

B. Satisfactory Borrow Soils: Soil Classification Groups GW, GP, GM, SW, SP, and SM according to ASTM D 2487, or a combination of these groups; free of rock or gravel larger than 3 inches in any dimension, debris, waste, frozen materials, vegetation, and other deleterious matter.

1. Liquid Limit: <10.

2. Plasticity Index: <5.

C. Unsatisfactory Borrow Soils: Soil Classification Groups GC, SC, CL, ML, OL, CH, MH, OH, and PT according to ASTM D 2487, or a combination of these groups.

1. Unsatisfactory soils also include satisfactory soils not maintained within 2 percent of optimum moisture content at time of compaction.

D. Subbase Material: Naturally or artificially graded mixture of natural or crushed gravel, crushed stone, and natural or crushed sand; ASTM D 2940; with at least 90 percent passing a 1-1/2-inch sieve and not more than 12 percent passing a No. 200 sieve.

E. Base Course: Naturally or artificially graded mixture of natural or crushed gravel, crushed stone, and natural or crushed sand; ASTM D 2940; with at least 95 percent passing a 1-1/2-inch sieve and not more than 8 percent passing a No. 200 sieve.

F. Engineered Fill: Naturally or artificially graded mixture of natural or crushed gravel, crushed stone, and natural or crushed sand; ASTM D 2940; with at least 90 percent passing a 1-1/2-inch sieve and not more than 12 percent passing a No. 200 sieve.

G. Bedding Course: Naturally or artificially graded mixture of natural or crushed gravel, crushed stone, and natural or crushed sand; ASTM D 2940; except with 100 percent passing a 1-inch sieve and not more than 8 percent passing a No. 200 sieve.

H. Drainage Course: Narrowly graded mixture of washed crushed stone, or crushed or uncrushed gravel; ASTM D 448; coarse-aggregate grading Size 57; with 100 percent passing a 1-1/2-inch sieve and 0 to 5 percent passing a No. 8 sieve.

I. Filter Material: Narrowly graded mixture of natural or crushed gravel, or crushed stone and natural sand; ASTM D 448; coarse-aggregate grading Size 67; with 100 percent passing a 1-inch sieve and 0 to 5 percent passing a No. 4 sieve.

J. Sand: ASTM C 33; fine aggregate.

K. Impervious Fill: Clayey gravel and sand mixture capable of compacting to a dense state.

2.2 ACCESSORIES

A. Detectable Warning Tape: Acid- and alkali-resistant, polyethylene film warning tape manufactured for marking and identifying underground utilities, a minimum of 6 inches wide and 4 mils thick, continuously inscribed with a description of the utility, with metallic core encased in a protective jacket for corrosion protection, detectable by metal detector when tape is buried up to 30 inches deep; colored as follows:

1. Red: Electric.

2. Yellow: Gas, oil, steam, and dangerous materials.

3. Orange: Telephone and other communications.

4. Blue: Water systems.

5. Green: Sewer systems.

PART 3 - EXECUTION

3.1 PREPARATION

A. Protect structures, utilities, sidewalks, pavements, and other facilities from damage caused by settlement, lateral movement, undermining, washout, and other hazards created by earth moving operations.

B. Protect and maintain erosion and sedimentation controls during earth moving operations.

C. Protect subgrades and foundation soils from freezing temperatures and frost. Remove temporary protection before placing subsequent materials.

3.2 DEWATERING

A. Prevent surface water and ground water from entering excavations, from ponding on prepared subgrades, and from flooding Project site and surrounding area.

B. Protect subgrades from softening, undermining, washout, and damage by rain or water accumulation.

1. Reroute surface water runoff away from excavated areas. Do not allow water to accumulate in excavations. Do not use excavated trenches as temporary drainage ditches.

3.3 EXPLOSIVES

A. Explosives: Do not use explosives.

3.4 EXCAVATION, GENERAL

A. Unclassified Excavation: Excavate to subgrade elevations regardless of the character of surface and subsurface conditions encountered. Unclassified excavated materials may include rock, soil materials, and obstructions. No changes in the Contract Sum or the Contract Time will be authorized for rock excavation or removal of obstructions.

1. If excavated materials intended for fill and backfill include unsatisfactory soil materials and rock, replace with satisfactory soil materials.

2. Remove rock to lines and grades indicated to permit installation of permanent construction without exceeding the following dimensions:

a. 24 inches outside of concrete forms other than at footings.

b. 12 inches outside of concrete forms at footings.

c. 6 inches outside of minimum required dimensions of concrete cast against grade.

d. Outside dimensions of concrete walls indicated to be cast against rock without forms or exterior waterproofing treatments.

e. 6 inches beneath bottom of concrete slabs-on-grade.

f. 6 inches beneath pipe in trenches, and the greater of 24 inches wider than pipe or 42 inches wide.

3.5 EXCAVATION FOR STRUCTURES

A. Excavate to indicated elevations and dimensions within a tolerance of plus or minus 1 inch. If applicable, extend excavations a sufficient distance from structures for placing and removing concrete formwork, for installing services and other construction, and for inspections.

1. Excavations for Footings and Foundations: Do not disturb bottom of excavation. Excavate by hand to final grade just before placing concrete reinforcement. Trim bottoms to required lines and grades to leave solid base to receive other work.

2. Pile Foundations: Stop excavations 6 to 12 inches above bottom of pile cap before piles are placed. After piles have been driven, remove loose and displaced material. Excavate to final grade, leaving solid base to receive concrete pile caps.

3. Excavation for Underground Tanks, Basins, and Mechanical or Electrical Utility Structures: Excavate to elevations and dimensions indicated within a tolerance of plus or minus 1 inch. Do not disturb bottom of excavations intended as bearing surfaces.

B. Excavations at Edges of Tree- and Plant-Protection Zones:

1. Excavate by hand to indicated lines, cross sections, elevations, and subgrades. Use narrow-tine spading forks to comb soil and expose roots. Do not break, tear, or chop exposed roots. Do not use mechanical equipment that rips, tears, or pulls roots.

2. Cut and protect roots according to requirements in Section 01 5639 "Temporary Tree and Plant Protection."

3.6 EXCAVATION FOR WALKS AND PAVEMENTS

A. Excavate surfaces under walks and pavements to indicated lines, cross sections, elevations, and subgrades.

3.7 EXCAVATION FOR UTILITY TRENCHES

A. Excavate trenches to indicated gradients, lines, depths, and elevations.

1. Beyond building perimeter, excavate trenches to allow installation of top of pipe below frost line.

B. Excavate trenches to uniform widths to provide the following clearance on each side of pipe or conduit. Excavate trench walls vertically from trench bottom to 12 inches higher than top of pipe or conduit unless otherwise indicated.

1. Clearance: As indicated.

C. Trench Bottoms: Excavate trenches 4 inches deeper than bottom of pipe and conduit elevations to allow for bedding course. Hand-excavate deeper for bells of pipe.

1. Excavate trenches 6 inches deeper than elevation required in rock or other unyielding bearing material to allow for bedding course.

D. Trenches in Tree- and Plant-Protection Zones:

1. Hand-excavate to indicated lines, cross sections, elevations, and subgrades. Use narrow-tine spading forks to comb soil and expose roots. Do not break, tear, or chop exposed roots. Do not use mechanical equipment that rips, tears, or pulls roots.

2. Do not cut main lateral roots or taproots; cut only smaller roots that interfere with installation of utilities.

3. Cut and protect roots according to requirements in Section 01 5639 "Temporary Tree and Plant Protection."

3.8 SUBGRADE INSPECTION

A. Notify Architect when excavations have reached required subgrade.

B. If Architect determines that unsatisfactory soil is present, continue excavation and replace with compacted backfill or fill material as directed.

C. Proof-roll subgrade below the building slabs and pavements with a pneumatic-tired and loaded 10-wheel, tandem-axle dump truck weighing not less than 15 tons to identify soft pockets and areas of excess yielding. Do not proof-roll wet or saturated subgrades.

1. Completely proof-roll subgrade in one direction, repeating proof-rolling in direction perpendicular to first direction. Limit vehicle speed to 3 mph.

2. Excavate soft spots, unsatisfactory soils, and areas of excessive pumping or rutting, as determined by Architect, and replace with compacted backfill or fill as directed.

D. Authorized additional excavation and replacement material will be paid for according to Contract provisions for unit prices.

E. Reconstruct subgrades damaged by freezing temperatures, frost, rain, accumulated water, or construction activities, as directed by Architect, without additional compensation.

3.9 UNAUTHORIZED EXCAVATION

A. Fill unauthorized excavation under foundations or wall footings by extending bottom elevation of concrete foundation or footing to excavation bottom, without altering top elevation. Lean concrete fill, with 28-day compressive strength of 2500 psi, may be used when approved by Architect.

1. Fill unauthorized excavations under other construction, pipe, or conduit as directed by Architect.

3.10 STORAGE OF SOIL MATERIALS

A. Stockpile borrow soil materials and excavated satisfactory soil materials without intermixing. Place, grade, and shape stockpiles to drain surface water. Cover to prevent windblown dust.

1. Stockpile soil materials away from edge of excavations. Do not store within drip line of remaining trees.

3.11 BACKFILL

A. Place and compact backfill in excavations promptly, but not before completing the following:

1. Construction below finish grade including, where applicable, subdrainage, dampproofing, waterproofing, and perimeter insulation.

2. Surveying locations of underground utilities for Record Documents.

3. Testing and inspecting underground utilities.

4. Removing concrete formwork.

5. Removing trash and debris.

6. Removing temporary shoring and bracing, and sheeting.

7. Installing permanent or temporary horizontal bracing on horizontally supported walls.

B. Place backfill on subgrades free of mud, frost, snow, or ice.

3.12 UTILITY TRENCH BACKFILL

A. Place backfill on subgrades free of mud, frost, snow, or ice.

B. Place and compact bedding course on trench bottoms and where indicated. Shape bedding course to provide continuous support for bells, joints, and barrels of pipes and for joints, fittings, and bodies of conduits.

C. Trenches under Footings: Backfill trenches excavated under footings and within 18 inches of bottom of footings with satisfactory soil; fill with concrete to elevation of bottom of footings. Concrete is specified in Section 03 3000 "Cast-in-Place Concrete" and Section 03 3053 "Miscellaneous Cast-in-Place Concrete."

D. Trenches under Roadways: Provide 4-inch thick, concrete-base slab support for piping or conduit less than 30 inches below surface of roadways. After installing and testing, completely encase piping or conduit in a minimum of 4 inches of concrete before backfilling or placing roadway subbase course. Concrete is specified in Section 03 3000 "Cast-in-Place Concrete" Section 03 3053 and "Miscellaneous Cast-in-Place Concrete."

E. Backfill voids with satisfactory soil while removing shoring and bracing.

F. Place and compact initial backfill of satisfactory soil, free of particles larger than 1 inch in any dimension, to a height of 12 inches over the pipe or conduit.

1. Carefully compact initial backfill under pipe haunches and compact evenly up on both sides and along the full length of piping or conduit to avoid damage or displacement of piping or conduit. Coordinate backfilling with utilities testing.

G. Controlled Low-Strength Material: Place initial backfill of controlled low-strength material to a height of 12 inches over the pipe or conduit. Coordinate backfilling with utilities testing.

H. Place and compact final backfill of satisfactory soil to final subgrade elevation.

I. Controlled Low-Strength Material: Place final backfill of controlled low-strength material to final subgrade elevation.

J. Install warning tape directly above utilities, 12 inches below finished grade, except 6 inches below subgrade under pavements and slabs.

3.13 SOIL FILL

A. Plow, scarify, bench, or break up sloped surfaces steeper than 1 vertical to 4 horizontal so fill material will bond with existing material.

B. Place and compact fill material in layers to required elevations as follows:

1. Under grass and planted areas, use satisfactory soil material.

2. Under walks and pavements, use satisfactory soil material.

3. Under steps and ramps, use engineered fill.

4. Under building slabs, use engineered fill.

5. Under footings and foundations, use engineered fill.

C. Place soil fill on subgrades free of mud, frost, snow, or ice.

3.14 SOIL MOISTURE CONTROL

A. Uniformly moisten or aerate subgrade and each subsequent fill or backfill soil layer before compaction to within 2 percent of optimum moisture content.

1. Do not place backfill or fill soil material on surfaces that are muddy, frozen, or contain frost or ice.

2. Remove and replace, or scarify and air dry, otherwise satisfactory soil material that exceeds optimum moisture content by 2 percent and is too wet to compact to specified dry unit weight.

3.15 COMPACTION OF SOIL BACKFILLS AND FILLS

A. Place backfill and fill soil materials in layers not more than 8 inches in loose depth for material compacted by heavy compaction equipment, and not more than 4 inches in loose depth for material compacted by hand-operated tampers.

B. Place backfill and fill soil materials evenly on all sides of structures to required elevations, and uniformly along the full length of each structure.

C. Compact soil materials to not less than the following percentages of maximum dry unit weight according to ASTM D 1557:

1. Under structures, building slabs, steps, and pavements, scarify and recompact top 12 inches of existing subgrade and each layer of backfill or fill soil material at 95 percent.

2. Under walkways, scarify and recompact top 6 inches below subgrade and compact each layer of backfill or fill soil material at 92 percent.

3. Under turf or unpaved areas, scarify and recompact top 6 inches below subgrade and compact each layer of backfill or fill soil material at 85 percent.

4. For utility trenches, compact each layer of initial and final backfill soil material at 85 percent.

3.16 GRADING

A. General: Uniformly grade areas to a smooth surface, free of irregular surface changes. Comply with compaction requirements and grade to cross sections, lines, and elevations indicated.

1. Provide a smooth transition between adjacent existing grades and new grades.

2. Cut out soft spots, fill low spots, and trim high spots to comply with required surface tolerances.

B. Site Rough Grading: Slope grades to direct water away from buildings and to prevent ponding. Finish subgrades to required elevations within the following tolerances:

1. Turf or Unpaved Areas: Plus or minus 1 inch.

2. Walks: Plus or minus 1 inch.

3. Pavements: Plus or minus 1/2 inch.

C. Grading inside Building Lines: Finish subgrade to a tolerance of 1/2 inch when tested with a 10-foot straightedge.

3.17 SUBSURFACE DRAINAGE

A. Subdrainage Pipe: Specified in Section 33 4600 "Subdrainage."

B. Subsurface Drain: Place subsurface drainage geotextile around perimeter of subdrainage trench. Place a 6-inch course of filter material on subsurface drainage geotextile to support subdrainage pipe. Encase subdrainage pipe in a minimum of 12 inches of filter material, placed in compacted layers 6 inches thick, and wrap in subsurface drainage geotextile, overlapping sides and ends at least 6 inches.

1. Compact each filter material layer to 85 percent of maximum dry unit weight according to ASTM D 698.

C. Drainage Backfill: Place and compact filter material over subsurface drain, in width indicated, to within 12 inches of final subgrade, in compacted layers 6 inches thick. Overlay drainage backfill with one layer of subsurface drainage geotextile, overlapping sides and ends at least 6 inches.

1. Compact each filter material layer to 85 percent of maximum dry unit weight according to ASTM D 698.

2. Place and compact impervious fill over drainage backfill in 6-inch thick compacted layers to final subgrade.

3.18 SUBBASE AND BASE COURSES UNDER PAVEMENTS AND WALKS

A. Place base course on subgrades free of mud, frost, snow, or ice.

B. On prepared subgrade, place base course under pavements and walks as follows:

1. Shape subbase course and base course to required crown elevations and cross-slope grades.

2. Place base course 6 inches or less in compacted thickness in a single layer.

3. Place base course that exceeds 6 inches in compacted thickness in layers of equal thickness, with no compacted layer more than 6 inches thick or less than 3 inches thick.

4. Compact base course at optimum moisture content to required grades, lines, cross sections, and thickness to not less than 95 percent of maximum dry unit weight according to ASTM D 1557.

C. Pavement Shoulders: Place shoulders along edges of base course to prevent lateral movement. Construct shoulders, at least 12 inches wide, of satisfactory soil materials and compact simultaneously with each base layer to not less than 95 percent of maximum dry unit weight according to ASTM D 1557.

3.19 FIELD QUALITY CONTROL

A. Special Inspections: City will engage a qualified special inspector to perform the following special inspections:

1. Determine prior to placement of fill that site has been prepared in compliance with requirements.

2. Determine that fill material and maximum lift thickness comply with requirements.

3. Determine, at the required frequency, that in-place density of compacted fill complies with requirements.

B. Testing Agency: City will engage a qualified geotechnical engineering testing agency to perform tests and inspections.

C. Allow testing agency to inspect and test subgrades and each fill or backfill layer. Proceed with subsequent earth moving only after test results for previously completed work comply with requirements.

D. Footing Subgrade: At footing subgrades, at least one test of each soil stratum will be performed to verify design bearing capacities. Subsequent verification and approval of other footing subgrades may be based on a visual comparison of subgrade with tested subgrade when approved by Architect.

E. Testing agency will test compaction of soils in place according to ASTM D 1556, ASTM D 2167, ASTM D 2922, and ASTM D 2937, as applicable. Tests will be performed at the following locations and frequencies:

1. Paved and Building Slab Areas: At subgrade and at each compacted fill and backfill layer, at least one test for every 2000 sq. ft. or less of paved area or building slab, but in no case fewer than three tests.

2. Foundation Wall Backfill: At each compacted backfill layer, at least one test for every 100 feet or less of wall length, but no fewer than two tests.

3. Trench Backfill: At each compacted initial and final backfill layer, at least one test for every 150 feet or less of trench length, but no fewer than two tests.

F. When testing agency reports that subgrades, fills, or backfills have not achieved degree of compaction specified, scarify and moisten or aerate, or remove and replace soil materials to depth required; recompact and retest until specified compaction is obtained.

3.20 PROTECTION

A. Protecting Graded Areas: Protect newly graded areas from traffic, freezing, and erosion. Keep free of trash and debris.

B. Repair and reestablish grades to specified tolerances where completed or partially completed surfaces become eroded, rutted, settled, or where they lose compaction due to subsequent construction operations or weather conditions.

1. Scarify or remove and replace soil material to depth as directed by Architect; reshape and recompact.

C. Where settling occurs before Project correction period elapses, remove finished surfacing, backfill with additional soil material, compact, and reconstruct surfacing.

1. Restore appearance, quality, and condition of finished surfacing to match adjacent work, and eliminate evidence of restoration to greatest extent possible.

3.21 DISPOSAL OF SURPLUS AND WASTE MATERIALS

A. Remove surplus satisfactory soil and waste materials, including unsatisfactory soil, trash, and debris, and legally dispose of them off City's property.

END OF SECTION

SECTION 31 2319
DEWATERING

PART 1 - GENERAL

1.1 SUMMARY

A. Section includes:

1. Construction dewatering.

B. Related work:

1. Section 01 3233 "Photographic Documentation" for recording preexisting conditions and dewatering system progress.

2. Section 31 2000 "Earth Moving" for excavating, backfilling, site grading, and controlling surface-water runoff and ponding.

3. Section 33 4600 "Subdrainage" for permanent foundation wall, underfloor, and footing drainage.

1.2 PREINSTALLATION MEETINGS

A. Preinstallation Conference: Conduct conference at Project site.

1. Verify availability of Installer's personnel, equipment, and facilities needed to make progress and avoid delays.

2. Review condition of site to be dewatered including coordination with temporary erosion-control measures and temporary controls and protections.

3. Review geotechnical report.

4. Review proposed site clearing and excavations.

5. Review existing utilities and subsurface conditions.

6. Review observation and monitoring of dewatering system.

1.3 ACTION SUBMITTALS

A. Shop Drawings: For dewatering system, prepared by or under the supervision of a qualified professional engineer.

1. Include plans, elevations, sections, and details.

2. Show arrangement, locations, and details of wells and well points; locations of risers, headers, filters, pumps, power units, and discharge lines; and means of discharge, control of sediment, and disposal of water.

3. Include layouts of piezometers and flow-measuring devices for monitoring performance of dewatering system.

4. Include written plan for dewatering operations including sequence of well and well-point placement coordinated with excavation shoring and bracings and control procedures to be adopted if dewatering problems arise.

1.4 INFORMATIONAL SUBMITTALS

A. Field quality-control reports.

B. Existing Conditions: Using photographs or video recordings, show existing conditions of adjacent construction and site improvements that might be misconstrued as damage caused by dewatering operations. Submit before Work begins.

C. Record Drawings: Identify locations and depths of capped wells and well points and other abandoned-in-place dewatering equipment.

1.5 QUALITY ASSURANCE

A. Installer Qualifications: An experienced installer that has specialized in design of dewatering systems and dewatering work.

1.6 FIELD CONDITIONS

A. Project-Site Information: A geotechnical report has been prepared for this Project and is available for information only. The opinions expressed in this report are those of a geotechnical engineer and represent interpretations of subsoil conditions, tests, and results of analyses conducted by a geotechnical engineer. City is not responsible for interpretations or conclusions drawn from this data.

1. Make additional test borings and conduct other exploratory operations necessary for dewatering according to the performance requirements.

2. The geotechnical report is referenced elsewhere in Project Manual.

B. Survey Work: Engage a qualified land surveyor or professional engineer to survey adjacent existing buildings, structures, and site improvements; establish exact elevations at fixed points to act as benchmarks. Clearly identify benchmarks and record existing elevations.

PART 2 - PRODUCTS

2.1 PERFORMANCE REQUIREMENTS

A. Dewatering Performance: Design, furnish, install, test, operate, monitor, and maintain dewatering system of sufficient scope, size, and capacity to control hydrostatic pressures and to lower, control, remove, and dispose of ground water and permit excavation and construction to proceed on dry, stable subgrades.

1. Design dewatering system, including comprehensive engineering analysis by a qualified professional engineer.

2. Continuously monitor and maintain dewatering operations to ensure erosion control, stability of excavations and constructed slopes, prevention of flooding in excavation, and prevention of damage to subgrades and permanent structures.

3. Prevent surface water from entering excavations by grading, dikes, or other means.

4. Accomplish dewatering without damaging existing buildings, structures, and site improvements adjacent to excavation.

5. Remove dewatering system when no longer required for construction.

B. Regulatory Requirements: Comply with governing EPA notification regulations before beginning dewatering. Comply with water- and debris-disposal regulations of authorities having jurisdiction.

PART 3 - EXECUTION

3.1 PREPARATION

A. Protect structures, utilities, sidewalks, pavements, and other facilities from damage caused by settlement, lateral movement, undermining, washout, and other hazards created by dewatering operations.

1. Prevent surface water and subsurface or ground water from entering excavations, from ponding on prepared subgrades, and from flooding site or surrounding area.

2. Protect subgrades and foundation soils from softening and damage by rain or water accumulation.

B. Install dewatering system to ensure minimum interference with roads, streets, walks, and other adjacent occupied and used facilities.

1. Do not close or obstruct streets, walks, or other adjacent occupied or used facilities without permission from City and authorities having jurisdiction. Provide alternate routes around closed or obstructed traffic ways if required by authorities having jurisdiction.

C. Provide temporary grading to facilitate dewatering and control of surface water.

D. Protect and maintain temporary erosion and sedimentation controls, which are specified in Section 01 5000 "Temporary Facilities and Controls," and Section 31 1000 "Site Clearing," during dewatering operations.

3.2 INSTALLATION

A. Install dewatering system utilizing wells, well points, or similar methods complete with pump equipment, standby power and pumps, filter material gradation, valves, appurtenances, water disposal, and surface-water controls.

1. Space well points or wells at intervals required to provide sufficient dewatering.

2. Use filters or other means to prevent pumping of fine sands or silts from the subsurface.

B. Place dewatering system into operation to lower water to specified levels before excavating below ground-water level.

C. Provide sumps, sedimentation tanks, and other flow-control devices as required by authorities having jurisdiction.

D. Provide standby equipment on-site, installed and available for immediate operation, to maintain dewatering on continuous basis if any part of system becomes inadequate or fails.

3.3 OPERATION

A. Operate system continuously until drains, sewers, and structures have been constructed and fill materials have been placed or until dewatering is no longer required.

B. Operate system to lower and control ground water to permit excavation, construction of structures, and placement of fill materials on dry subgrades. Drain water-bearing strata above and below bottom of foundations, drains, sewers, and other excavations.

1. Do not permit open-sump pumping that leads to loss of fines, soil piping, subgrade softening, and slope instability.

2. Reduce hydrostatic head in water-bearing strata below subgrade elevations of foundations, drains, sewers, and other excavations.

3. Maintain piezometric water level a minimum of 24 inches below bottom of excavation.

C. Dispose of water removed by dewatering in a manner that avoids endangering public health, property, and portions of work under construction or completed. Dispose of water and sediment in a manner that avoids inconvenience to others.

D. Remove dewatering system from Project site on completion of dewatering. Plug or fill well holes with sand or cut off and cap wells a minimum of 36 inches below overlying construction.

3.4 PROTECTION

A. Protect and maintain dewatering system during dewatering operations.

B. Promptly repair damages to adjacent facilities caused by dewatering.

END OF SECTION

SECTION 33 4100
STORM UTILITY DRAINAGE PIPING

PART 1 - GENERAL

1.1 SUMMARY

A. This Section includes on-site storm drainage piping and related components outside the building. Storm drainage piping and related components within the public street right-of-way (off-site) shall be in conformance with the City of Torrance standards.

1.2 DEFINITIONS

A. FRP: Fiberglass-reinforced plastic.

1.3 ACTION SUBMITTALS

A. Product Data: For each type of product indicated.

B. Shop Drawings:

1. Manholes: Include plans, elevations, sections, details, frames, and covers.

2. Catch basins: Include plans, elevations, sections, details, frames, covers, and grates.

1.4 INFORMATIONAL SUBMITTALS

A. Product Certificates: For each type of cast-iron soil pipe and fitting, from manufacturer.

B. Field quality-control reports.

1.5 DELIVERY, STORAGE, AND HANDLING

A. Do not store plastic manholes, pipe, and fittings in direct sunlight.

B. Protect pipe, pipe fittings, and seals from dirt and damage.

C. Handle manholes according to manufacturer's written rigging instructions.

D. Handle catch basins and according to manufacturer's written rigging instructions.

1.6 PROJECT CONDITIONS

A. Interruption of Existing Storm Drainage Service: Do not interrupt service to facilities occupied by Owner or others unless permitted under the following conditions and then only after arranging to provide temporary service according to requirements indicated:

1. Notify Owner no fewer than two days in advance of proposed interruption of service.

2. Do not proceed with interruption of service without Owner's written permission.

PART 2 - PRODUCTS

2.1 PVC PIPE AND FITTINGS

A. PVC Gravity Sewer Piping:

1. Pipe and Fittings: ASTM F 679, T-1 wall thickness, PVC gravity sewer pipe with bell-and-spigot ends and with integral ASTM F 477, elastomeric seals for gasketed joints.

2.2 BACKWATER VALVES

A. Manufacturers: Subject to compliance with requirements, provide products by one of the following:

1. TideFlex (or approved equivalent).

2.3 CLEANOUTS

A. Plastic Cleanouts:

1. Basis-of-Design Product: Subject to compliance with requirements, provide product indicated on Drawings.

2.4 DRAINS

A. Cast-Iron Area Drains:

1. Basis-of-Design Product: Subject to compliance with requirements, provide product indicated on Drawings.

2.5 CATCH BASINS

A. Standard Precast Concrete Catch Basins:

1. Basis-of-Design Product: Subject to compliance with requirements, provide product indicated on Drawings.

PART 3 - EXECUTION

3.1 EARTHWORK

A. Excavation, trenching, and backfilling are specified in Section 31 20 00 "Earth Moving."

3.2 PIPING INSTALLATION

A. General Locations and Arrangements: Drawing plans and details indicate general location and arrangement of underground storm drainage piping. Location and arrangement of piping layout

take into account design considerations. Install piping as indicated, to extent practical. Where specific installation is not indicated, follow piping manufacturer's written instructions.

B. Install piping beginning at low point, true to grades and alignment indicated with unbroken continuity of invert. Place bell ends of piping facing upstream. Install gaskets, seals, sleeves, and couplings according to manufacturer's written instructions for use of lubricants, cements, and other installation requirements.

C. Install manholes for changes in direction unless fittings are indicated. Use fittings for branch connections unless direct tap into existing sewer is indicated.

D. Install proper size increasers, reducers, and couplings where different sizes or materials of pipes and fittings are connected. Reducing size of piping in direction of flow is prohibited.

E. When installing pipe under streets or other obstructions that cannot be disturbed, use pipe-jacking process of microtunneling.

F. Install gravity-flow, non-pressure drainage piping according to the following:

1. Install piping pitched down in direction of flow.

2. Install piping with 36-inch minimum cover or as indicated on the Drawings.

3. Install PVC sewer piping according to ASTM D 2321 and ASTM F 1668.

3.3 PIPE JOINT CONSTRUCTION

A. Join gravity-flow, nonpressure drainage piping according to the following:

1. Join PVC sewer piping according to ASTM D 2321 and ASTM D 3034 for elastomeric-seal joints or ASTM D 3034 for elastomeric-gasketed joints.

3.4 CLEANOUT INSTALLATION

A. Install cleanouts and riser extensions from sewer pipes to cleanouts at grade. Use cast-iron soil pipe fittings in sewer pipes at branches for cleanouts and cast-iron soil pipe for riser extensions to cleanouts. Install piping so cleanouts open in direction of flow in sewer pipe.

1. Use Light-Duty, top-loading classification cleanouts in earth or unpaved foot-traffic areas.

2. Use Medium-Duty, top-loading classification cleanouts in paved foot-traffic areas.

3. Use Heavy-Duty, top-loading classification cleanouts in vehicle-traffic service areas.

4. Use Extra-Heavy-Duty, top-loading classification cleanouts in roads.

B. Set cleanout frames and covers in earth in cast-in-place concrete block, 18 by 18 by 12 inches deep. Set with tops 1 inch above surrounding earth grade.

C. Set cleanout frames and covers in concrete pavement and roads with tops flush with pavement surface.

3.5 DRAIN INSTALLATION

A. Install type of drains in locations indicated.

1. Use Light-Duty, top-loading classification drains in earth or unpaved foot-traffic areas.

2. Use Medium-Duty, top-loading classification drains in paved foot-traffic areas.

3. Use Heavy-Duty, top-loading classification drains in vehicle-traffic service areas.

4. Use Extra-Heavy-Duty, top-loading classification drains in roads.

B. Embed drains in 4-inch minimum concrete around bottom and sides.

C. Fasten grates to drains if indicated.

D. Set drain frames and covers with tops flush with pavement surface.

E. Assemble trench sections with flanged joints.

F. Embed trench sections in 4-inch minimum concrete around bottom and sides.

3.6 CATCH BASIN INSTALLATION

A. Construct catch basins to sizes and shapes indicated.

B. Set frames and grates to elevations indicated.

3.7 STORMWATER INLET AND OUTLET INSTALLATION

A. Construct inlet head walls, aprons, and sides of reinforced concrete, as indicated.

B. Construct riprap of broken stone, as indicated.

C. Install outlets that spill onto grade, anchored with concrete, where indicated.

D. Install outlets that spill onto grade, with flared end sections that match pipe, where indicated.

E. Construct energy dissipaters at outlets, as indicated.

3.8 CONCRETE PLACEMENT

A. Place cast-in-place concrete according to ACI 318.

3.9 IDENTIFICATION

A. Materials and their installation are specified in Section 31 20 00 "Earth Moving." Arrange for installation of green warning tape directly over piping and at outside edge of underground structures.

1. Use detectable warning tape over nonferrous piping and over edges of underground structures.

3.10 FIELD QUALITY CONTROL

A. Inspect interior of piping to determine whether line displacement or other damage has occurred. Inspect after approximately 24 inches of backfill is in place, and again at completion of Project.

1. Submit separate reports for each system inspection.

2. Defects requiring correction include the following:

a. Alignment: Less than full diameter of inside of pipe is visible between structures.

b. Deflection: Flexible piping with deflection that prevents passage of ball or cylinder of size not less than 92.5 percent of piping diameter.

c. Damage: Crushed, broken, cracked, or otherwise damaged piping.

d. Infiltration: Water leakage into piping.

e. Exfiltration: Water leakage from or around piping.

3. Replace defective piping using new materials, and repeat inspections until defects are within allowances specified.

4. Reinspect and repeat procedure until results are satisfactory.

B. Test new piping systems, and parts of existing systems that have been altered, extended, or repaired, for leaks and defects.

1. Do not enclose, cover, or put into service before inspection and approval.

2. Test completed piping systems according to requirements of authorities having jurisdiction.

3. Schedule tests and inspections by authorities having jurisdiction with at least 24 hours' advance notice.

4. Submit separate report for each test.

5. Gravity-Flow Storm Drainage Piping: Test according to requirements of authorities having jurisdiction, UNI-B-6, and the following:

a. Exception: Piping with soiltight joints unless required by authorities having jurisdiction.

b. Option: Test plastic piping according to ASTM F 1417.

c. Option: Test concrete piping according to ASTM C 924 (ASTM C 924M).

C. Leaks and loss in test pressure constitute defects that must be repaired.

D. Replace leaking piping using new materials, and repeat testing until leakage is within allowances specified.

3.11 CLEANING

A. Clean interior of piping of dirt and superfluous materials. Flush with potable water.

END OF SECTION

SECTION 33 4600
SUBDRAINAGE

PART 1 - GENERAL

1.1 SUMMARY

A. Section includes:

1. Perforated-wall pipe and fittings.

2. Drainage conduits.

3. Drainage panels.

4. Geotextile filter fabrics.

1.2 SUBMITTALS

A. Product Data:

1. Drainage conduits, including rated capacities.

2. Drainage panels, including rated capacities.

3. Geotextile filter fabrics.

PART 2 - PRODUCTS

2.1 PERFORATED-WALL PIPES AND FITTINGS

A. Perforated PVC Sewer Pipe and Fittings: ASTM D 2729, bell-and-spigot ends, for loose joints.

2.2 DRAINAGE CONDUITS

A. Molded-Sheet Drainage Conduits: Prefabricated geocomposite with cuspated, molded-plastic drainage core wrapped in geotextile filter fabric.

1. Manufacturers: Subject to compliance with requirements, provide products by one of the following:

a. American Wick Drain.

b. JDR Enterprises, Inc.

c. TenCate Geosynthetics.

2. Nominal Size: 12 inches high by approximately 1 inch thick.

a. Minimum In-Plane Flow: 30 gpm at hydraulic gradient of 1.0 when tested according to ASTM D 4716.

3. Nominal Size: 18 inches high by approximately 1 inch thick.

a. Minimum In-Plane Flow: 45 gpm at hydraulic gradient of 1.0 when tested according to ASTM D 4716.

4. Filter Fabric: PP geotextile.

5. Fittings: HDPE with combination NPS 4 and NPS 6 outlet connection.

B. Single-Pipe Drainage Conduits: Prefabricated geocomposite with perforated corrugated core molded from HDPE complying with ASTM D 3350 and wrapped in geotextile filter fabric.

C. Manufacturers: Subject to compliance with requirements, provide products by one of the following:

1. Advanced Drainage Systems, Inc.

2. Nominal Size: 12 inches high by approximately 1 inch thick.

a. Minimum In-Plane Flow: 30 gpm at hydraulic gradient of 1.0 when tested according to ASTM D 4716.

3. Nominal Size: 18 inches high by approximately 1 inch thick.

a. Minimum In-Plane Flow: 45 gpm at hydraulic gradient of 1.0 when tested according to ASTM D 4716.

4. Filter Fabric: PP geotextile.

5. Fittings: HDPE with combination NPS 4 and NPS 6 outlet connection.

6. Couplings: Corrugated HDPE band.

2.3 SOIL MATERIALS

A. Soil materials are specified in Section 31 2000 "Earth Moving."

2.4 WATERPROOFING FELTS

A. Material: Comply with ASTM D 226, Type I, asphalt or ASTM D 227, coal-tar-saturated organic felt.

2.5 GEOTEXTILE FILTER FABRICS

A. Description: Fabric of PP or polyester fibers or combination of both, with flow rate range from 110 to 330 gpm/sq. ft. when tested according to ASTM D 4491.

B. Structure Type: Nonwoven, needle-punched continuous filament.

1. Survivability: AASHTO M 288 Class 2.

2. Styles: Flat and sock.

PART 3 - EXECUTION

3.1 EXAMINATION

A. Examine surfaces and areas for suitable conditions where subdrainage systems are to be installed.

B. If subdrainage is required for landscaping, locate and mark existing utilities, underground structures, and aboveground obstructions before beginning installation and avoid disruption and damage of services.

C. Verify that drainage panels installed as part of foundation wall waterproofing is properly positioned to drain into subdrainage system.

D. Proceed with installation only after unsatisfactory conditions have been corrected.

3.2 EARTHWORK

A. Excavating, trenching, and backfilling are specified in Section 31 2000 "Earth Moving."

3.3 FOUNDATION DRAINAGE INSTALLATION

A. Place impervious fill material on subgrade adjacent to bottom of footing after concrete footing forms have been removed. Place and compact impervious fill to dimensions indicated, but not less than 6 inches deep and 12 inches wide.

B. Lay flat-style geotextile filter fabric in trench and overlap trench sides.

C. Place supporting layer of drainage course over compacted subgrade and geotextile filter fabric, to compacted depth of not less than 4 inches.

D. Encase pipe with sock-style geotextile filter fabric before installing pipe. Connect sock sections with adhesive or tape.

E. Install drainage piping as indicated in Part 3 "Piping Installation" Article for foundation subdrainage.

F. Add drainage course to width of at least 6 inches on side away from wall and to top of pipe to perform tests.

G. After satisfactory testing, cover drainage piping to width of at least 6 inches on side away from footing and above top of pipe to within 12 inches of finish grade.

H. Install drainage course and wrap top of drainage course with flat-style geotextile filter fabric.

I. Place layer of flat-style geotextile filter fabric over top of drainage course, overlapping edges at least 4 inches.

J. Install drainage panels on foundation walls as follows:

1. Coordinate placement with other drainage materials.

2. Lay perforated drainage pipe at base of footing. Install as indicated in Part 3 "Piping Installation" Article.

3. Separate 4 inches of fabric at beginning of roll and cut away 4 inches of core. Wrap fabric around end of remaining core.

4. Attach panels to wall beginning at subdrainage pipe. Place and secure molded-sheet drainage panels, with geotextile facing away from wall.

K. Place backfill material over compacted drainage course. Place material in loose-depth layers not exceeding 6 inches. Thoroughly compact each layer. Final backfill to finish elevations and slope away from building.

3.4 UNDERSLAB DRAINAGE INSTALLATION

A. Excavate for underslab drainage system after subgrade material has been compacted but before drainage course has been placed. Include horizontal distance of at least 6 inches between drainage pipe and trench walls. Grade bottom of trench excavations to required slope, and compact to firm, solid bed for drainage system.

B. Lay flat-style geotextile filter fabric in trench and overlap trench sides.

C. Place supporting layer of drainage course over compacted subgrade and geotextile filter fabric, to compacted depth of not less than 4 inches.

D. Encase pipe with sock-style geotextile filter fabric before installing pipe. Connect sock sections with adhesive or tape.

E. Install drainage piping as indicated in Part 3 "Piping Installation" Article for underslab subdrainage.

F. Add drainage course to width of at least 6 inches on side away from wall and to top of pipe to perform tests.

G. After satisfactory testing, cover drainage piping with drainage course to elevation of bottom of slab, and compact and wrap top of drainage course with flat-style geotextile filter fabric.

H. Install horizontal drainage panels as follows:

1. Coordinate placement with other drainage materials.

2. Lay perforated drainage pipe at inside edge of footing.

3. Place drainage panel over drainage pipe with core side up. Peel back fabric and wrap fabric around pipe. Locate top of core at bottom elevation of floor slab.

4. Butt additional panels against other installed panels. If panels have plastic flanges, overlap installed panel with flange.

3.5 RETAINING-WALL DRAINAGE INSTALLATION

A. Lay flat-style geotextile filter fabric in trench and overlap trench sides.

B. Place supporting layer of drainage course over compacted subgrade to compacted depth of not less than 4 inches.

C. Encase pipe with sock-style geotextile filter fabric before installing pipe. Connect sock sections with adhesive or tape.

D. Install drainage piping as indicated in Part 3 "Piping Installation" Article for retaining-wall subdrainage.

E. Add drainage course to width of at least 6 inches on side away from wall and to top of pipe to perform tests.

F. After satisfactory testing, cover drainage piping to width of at least 6 inches on side away from footing and above top of pipe to within 12 inches of finish grade.

G. Place drainage course in layers not exceeding 3 inches in loose depth; compact each layer placed and wrap top of drainage course with flat-style geotextile filter fabric.

H. Place layer of flat-style geotextile filter fabric over top of drainage course, overlapping edges at least 4 inches.

I. Install drainage panels on wall as follows:

1. Coordinate placement with other drainage materials.

2. Lay perforated drainage pipe at base of footing as described elsewhere in this Specification. Do not install aggregate.

3. If weep holes are used instead of drainage pipe, cut 1/2-inch diameter holes on core side at weep-hole locations. Do not cut fabric.

4. Mark horizontal calk line on wall at a point 6 inches less than panel width above footing bottom. Before marking wall, subtract footing width.

5. Separate 4 inches of fabric at beginning of roll and cut away 4 inches of core. Wrap fabric around end of remaining core.

6. Attach panel to wall at horizontal mark and at beginning of wall corner. Place core side of panel against wall. Use concrete nails with washers through product. Place nails from 2 to 6 inches below top of panel, approximately 48 inches apart. Do not penetrate waterproofing. Before using adhesives, discuss with waterproofing manufacturer.

7. If another panel is required on same row, cut away 4 inches of installed panel core and wrap fabric over new panel.

8. If additional rows of panel are required, overlap lower panel with 4 inches) of fabric.

9. Cut panel as necessary to keep top 12 inches below finish grade.

10. For inside corners, bend panel. For outside corners, cut core to provide 3 inches for overlap.

J. Fill to Grade: Place satisfactory soil fill material over compacted drainage course. Place material in loose-depth layers not exceeding 6 inches. Thoroughly compact each layer. Fill to finish grade.

3.6 LANDSCAPING DRAINAGE INSTALLATION

A. Provide trench width to allow installation of drainage conduit. Grade bottom of trench excavations to required slope, and compact to firm, solid bed for drainage system.

B. Lay flat-style geotextile filter fabric in trench and overlap trench sides.

C. Place supporting layer of drainage course over compacted subgrade and geotextile filter fabric, to compacted depth of not less than 4 inches.

D. Install drainage conduits as indicated in Part 3 "Piping Installation" Article for landscaping subdrainage with horizontal distance of at least 6 inches between conduit and trench walls. Wrap drainage conduits without integral geotextile filter fabric with flat-style geotextile filter fabric before installation. Connect fabric sections with adhesive.

E. Add drainage course to top of drainage conduits.

F. After satisfactory testing, cover drainage conduit to within 12 inches of finish grade.

G. Install drainage course and wrap top of drainage course with flat-style geotextile filter fabric.

H. Place layer of flat-style geotextile filter fabric over top of drainage course, overlapping edges at least 4 inches.

I. Fill to Grade: Place satisfactory soil fill material over drainage course. Place material in loose-depth layers not exceeding 6 inches. Thoroughly compact each layer. Fill to finish grade.

3.7 PIPING INSTALLATION

A. Install piping beginning at low points of system, true to grades and alignment indicated, with unbroken continuity of invert. Bed piping with full bearing in filtering material. Install gaskets, seals, sleeves, and couplings according to manufacturer's written instructions and other requirements indicated.

1. Foundation Subdrainage: Install piping level and with a minimum cover of 36 inches unless otherwise indicated.

2. Underslab Subdrainage: Install piping level.

3. Plaza Deck Subdrainage: Install piping level.

4. Retaining-Wall Subdrainage: When water discharges at end of wall into stormwater piping system, install piping level and with a minimum cover of 36 inches unless otherwise indicated.

5. Landscaping Subdrainage: Install piping pitched down in direction of flow, at a minimum slope of 0.5 percent and with a minimum cover of 36 inches unless otherwise indicated.

6. Lay perforated pipe with perforations down.

7. Excavate recesses in trench bottom for bell ends of pipe. Lay pipe with bells facing upslope and with spigot end entered fully into adjacent bell.

B. Use increasers, reducers, and couplings made for different sizes or materials of pipes and fittings being connected. Reduction of pipe size in direction of flow is prohibited.

C. Install thermoplastic piping according to ASTM D 2321.

3.8 PIPE JOINT CONSTRUCTION

A. Join perforated PE pipe and fittings with couplings according to ASTM D 3212 with loose banded, coupled, or push-on joints.

B. Join perforated PVC sewer pipe and fittings according to ASTM D 3212 with loose bell-and-spigot, push-on joints.

C. Special Pipe Couplings: Join piping made of different materials and dimensions with special couplings made for this application. Use couplings that are compatible with and fit materials and dimensions of both pipes.

3.9 BACKWATER VALVE INSTALLATION

A. Comply with requirements for backwater valves specified in Section 33 4100 "Storm Utility Drainage Piping."

B. Install horizontal backwater valves in header piping downstream from perforated subdrainage piping.

3.10 CLEANOUT INSTALLATION

A. Comply with requirements for cleanouts specified in Section 33 4100 "Storm Utility Drainage Piping."

B. Cleanouts for Retaining-Wall Subdrainage:

1. Install cleanouts from piping to grade. Locate cleanouts at beginning of piping run and at changes in direction. Install fittings so cleanouts open in direction of flow in piping.

2. In vehicular-traffic areas, use NPS 4 cast-iron soil pipe and fittings for piping branch fittings and riser extensions to cleanout. Set cleanout frames and covers in a cast-in-place concrete anchor, 18 by 18 by 12 inches deep. Set top of cleanout flush with grade.

3. In nonvehicular-traffic areas, use NPS 4 PVC pipe and fittings for piping branch fittings and riser extensions to cleanout. Set cleanout frames and covers in a cast-in-place concrete anchor, 12 by 12 by 4 inches deep. Set top of cleanout 1 inch above grade.

4. Comply with requirements for concrete specified in Section 03 3000 "Cast-in-Place Concrete."

C. Cleanouts for Underslab Subdrainage:

1. Install cleanouts and riser extensions from piping to top of slab. Locate cleanouts at beginning of piping run and at changes in direction. Install fittings so cleanouts open in direction of flow in piping.

2. Use NPS 4 cast-iron soil pipe and fittings for piping branch fittings and riser extensions to cleanout flush with top of slab.

3.11 CONNECTIONS

A. Comply with requirements for piping specified in Section 33 4100 "Storm Utility Drainage Piping." Drawings indicate general arrangement of piping, fittings, and specialties.

3.12 IDENTIFICATION

A. Arrange for installation of green warning tapes directly over piping. Comply with requirements for underground warning tapes specified in specified in Section 31 2000 "Earth Moving."

1. Install PE warning tape or detectable warning tape over ferrous piping.

2. Install detectable warning tape over nonferrous piping and over edges of underground structures.

3.13 FIELD QUALITY CONTROL

A. Tests and Inspections:

1. After installing drainage course to top of piping, test drain piping with water to ensure free flow before backfilling.

2. Remove obstructions, replace damaged components, and repeat test until results are satisfactory.

B. Drain piping will be considered defective if it does not pass tests and inspections.

C. Prepare test and inspection reports.

3.14 CLEANING

A. Clear interior of installed piping and structures of dirt and other superfluous material as work progresses. Maintain swab or drag in piping and pull past each joint as it is completed. Place plugs in ends of uncompleted pipe at end of each day or when work stops.

END OF SECTION

A

APPENDIX A – GEOTECHNICAL REPORT

A Report Prepared for:

Frank R. Webb Architects, Inc.
8607 Venice Boulevard
Los Angeles, CA 90034

GEOTECHNICAL INVESTIGATION
TORRANCE TRANSIT PARK AND RIDE REGIONAL TERMINAL - PHASE II
465 CRENSHAW BOULEVARD
TORRANCE, CALIFORNIA

Project No. 2013-031

By

Matt Dennerline
Geotechnical Engineer 2955

Saroj Weeraratne
Geotechnical Engineer 2374

Diaz•Yourman & Associates
1616 East 17th Street
Santa Ana, CA 92705-8509
(714) 245-2920

April 14, 2014

TABLE OF CONTENTS

1.0 INTRODUCTION 1

2.0 DATA REVIEW, FIELD EXPLORATION, AND LABORATORY TESTING 4

3.0 SITE CONDITIONS 5

3.1 SURFACE CONDITIONS 5
3.2 SUBSURFACE CONDITIONS 5

4.0 CONCLUSIONS AND RECOMMENDATIONS 7

4.1 SEISMIC/GEOLOGIC HAZARDS 7
4.2 EARTHWORK 8
4.2.1 Site Preparation and Grading 8
4.2.2 Excavations and Temporary and Permanent Slopes 12
4.2.3 Drainage 12
4.3 FOUNDATION DESIGN 13
4.4 RESISTANCE TO LATERAL LOADS AND LATERAL EARTH PRESSURE 13
4.4.1 Shallow Foundations 13
4.4.2 Deep Foundations 15
4.5 SLABS-ON-GRADE AND CONCRETE FLATWORK 15
4.6 UTILITY TRENCHES 16
4.7 PAVEMENT THICKNESS DESIGN 17

5.0 PLAN REVIEW, CONSTRUCTION OBSERVATION, AND TESTING 20

6.0 LIMITATIONS 21

7.0 BIBLIOGRAPHY 22

APPENDIX A - FIELD EXPLORATION A-1

APPENDIX B - LABORATORY TESTING B-1

LIST OF TABLES

Table 1 - SUMMARY OF GEOTECHNICAL CHARACTERISTICS 6
Table 2 - RESULTS OF PERMEABILITY TESTS 6
Table 3 - SEISMIC/GEOLOGIC DESIGN CRITERIA 7
Table 4 - IMPORT FILL AND SELECT BACKFILL CRITERIA 12

LIST OF FIGURES

Figure 1 - VICINITY MAP 1
Figure 2 - SITE PLAN 2
Figure 3 - GRADING/FOUNDATION DETAILS 9
Figure 4 - LATERAL EARTH PRESSURES 14
Figure 5 - RETAINING OR BASEMENT WALL DRAINAGE 15
Figure 6 - PIPELINE BACKFILL SCHEMATIC 17
Figure 7 - PAVEMENT THICKNESS 18

LIST OF ABBREVIATIONS AND ACRONYMS

ACE - Advanced Conceptual Engineering
ACI - American Concrete Institute
ASTM - ASTM International
bgs - below ground surface
bpf - blows per foot
BMP - Best Management Practice
Caltrans - California Department of Transportation
CBC - California Building Code
CDMG - California Department of Mines and Geology (currently CGS)
CGS - California Geological Survey
CIDH - cast-in-drilled-hole
CPT - cone penetration test
CTM - Caltrans Test Method
DYA - Diaz•Yourman & Associates
FS - factor of safety
GPS - global positioning system
HMA - hot mix asphalt
HSG - Hydrologic Soil Group
MSL - mean sea level
OSHA - U.S. Occupational Safety and Health Administration
PCC - Portland cement concrete
pcf - pounds per cubic foot
PGA - peak ground acceleration
ppm - parts per million
psf - pounds per square foot
psi - pounds per square inch
SPT - standard penetration test
TI - traffic index
tsf - tons per square foot
UBC - Uniform Building Code
USA – Underground Service Alert
USBR - U.S. Bureau of Reclamation
USDA - U.S. Department of Agriculture
USGS - U.S. Geological Survey
WVTR - water vapor transmission rate

1.0 INTRODUCTION

This report presents the results of the geotechnical services performed by Diaz•Yourman & Associates (DYA) for the proposed Torrance Transit Park and Ride Regional Terminal in Torrance, California. Frank R. Webb Architects, Inc. authorized this work on July 15, 2013.

The Torrance Transit Park and Ride Regional Terminal is located at the intersection of Crenshaw Boulevard at 208th Street in Torrance, California, as shown on the Vicinity Map, Figure 1. The triangular site is bounded by 208th Street to the north, Crenshaw Boulevard to the east, and railroad tracks to the southwest. The proposed project will consist of the following:

- An approximate 3,000-square-foot (sf) single-story structure (east building)
- An approximate 12,000-sf two-story structure (west building)
- Canopies
- Bus platform
- Pavements

The approximate layout of the proposed project is shown on the Site Plan, Figure 2. The foundation loads of the proposed structures are anticipated to have allowable column loads up to 100 kips. The proposed grade at the single-story structure (east building) location will be approximately at existing grade. However, the proposed grade at the two-story structure (west building) will be approximately 2 to 14 feet above the existing grade.

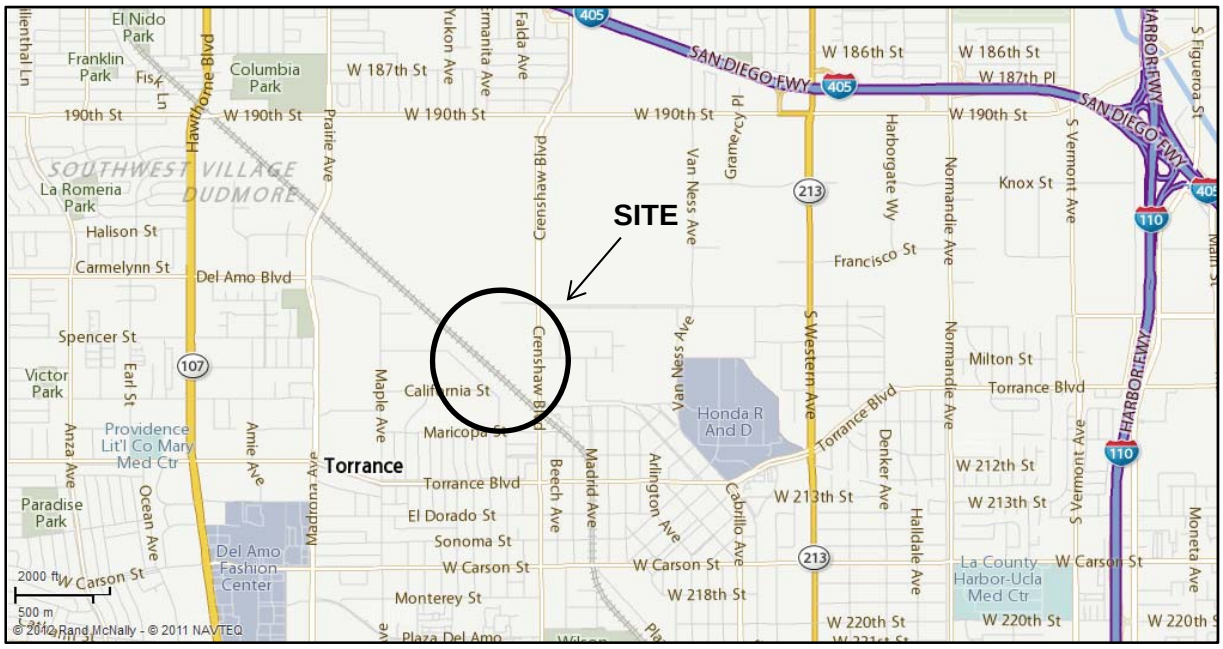

Figure 1 - VICINITY MAP

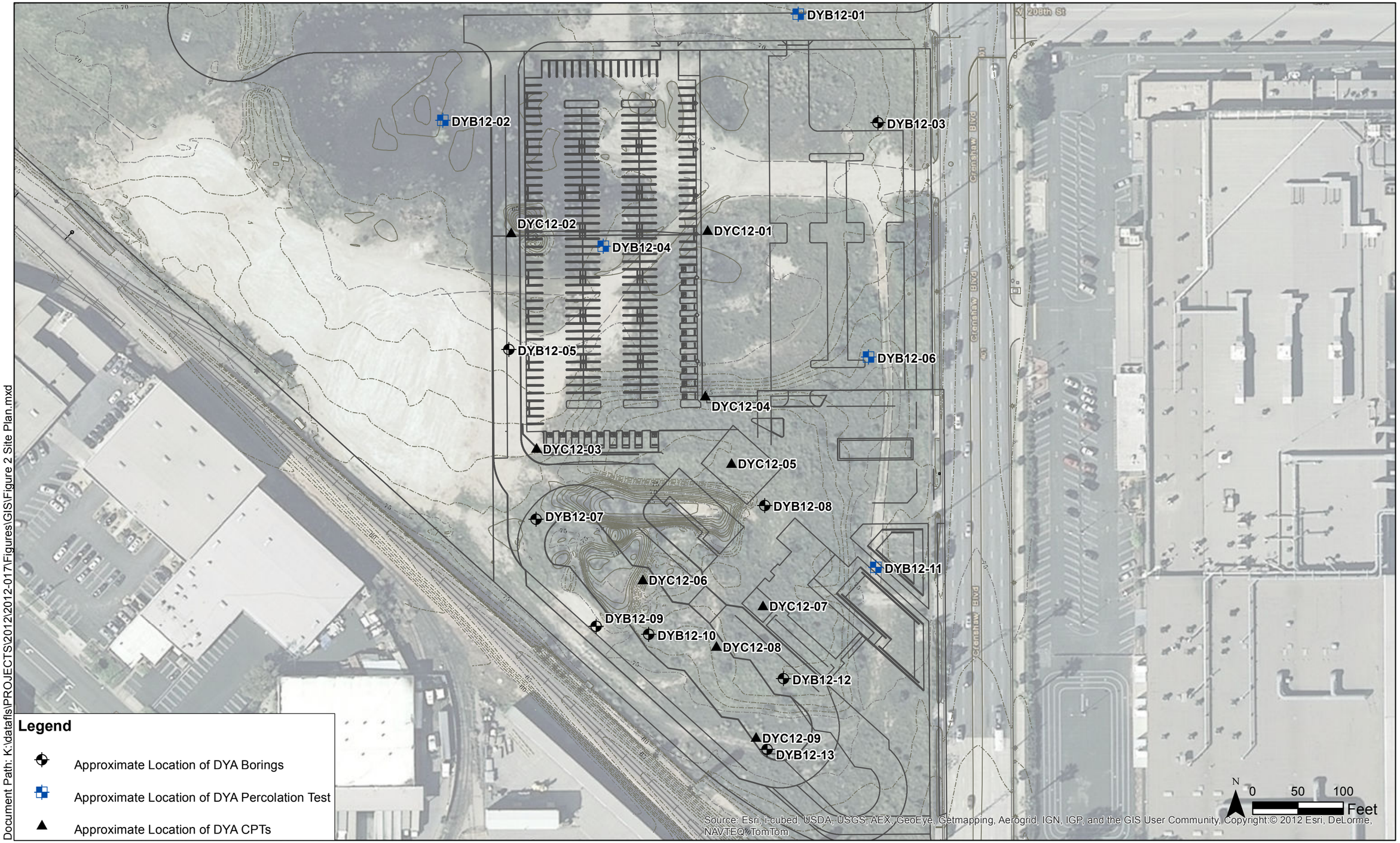

Document Path: K:\datafls\PROJECTS\2012\2012-017\Figures\GIS\Figure 2 Site Plan.mxd

Figure 2 - SITE PLAN

DYA previously performed field exploration and prepared a geotechnical report, dated June 13, 2013, for the subject project as part of the 30% Advanced Conceptual Engineering (ACE) portion of the project. DYA provided the above services as a subcontractor to RNL, Design, Inc. We understand that the structure locations for the final design will be at the locations identified in the Design Supplement by Frank R. Webb Architects dated February 14, 2011. Therefore, our geotechnical design services for the proposed structures will be based on DYA's field investigation for the 30% ACE portion of the project.

The purpose of DYA's services was to provide geotechnical input for the design of the proposed project. The scope of our services consisted of the following tasks:

- Reviewing available reports by DYA and others.
- Performing engineering analyses to develop conclusions and recommendations regarding the following:
  - Geologic and seismic hazards
  - Subsurface conditions
  - Site preparation and grading
  - Foundation type and allowable bearing capacity
  - Estimated total and differential foundation settlements
  - Resistance to lateral loads
  - Slab-on-grade support
  - Percolation
  - Pavement thickness design
  - Soil corrosion potential
- Preparing this report.

2.0 DATA REVIEW, FIELD EXPLORATION, AND LABORATORY TESTING

Geotechnical data from the project vicinity presented in previous reports were reviewed to supplement site data collected during this exploration. A list of the documents reviewed is presented in the bibliography (Section 7.0).

The field exploration performed as part of the 30% ACE portion of the project consisted of drilling 13 soil borings, conducted on August 8, 2012, and August 9, 2012, and advancing 9 cone penetration tests (CPT), conducted on June 1, 2012, at the locations shown on Figure 2. The boring and CPT locations were chosen to provide areal coverage of the project site for grading and data for foundation design. The boring and CPT depths, ranging from approximately 5 to 64.5 feet, were selected to extend to the depth of significant influence of the proposed loads and to investigate liquefaction potential. Some of the CPT locations and depths were chosen for a parking structure that is no longer being considered for the project. Details of the field exploration, including sampling procedures and boring logs and disposal of the investigation-derived waste, are presented in Appendix A. Five field permeability (percolation) tests were performed as described in Appendix A.

Soil samples collected from the borings were re-examined in the laboratory to substantiate field classifications. Selected soil samples were tested for moisture content, dry density, grain-size distribution, percent passing the No. 200 sieve, Atterberg limits, expansion index, consolidation (confined compression), shear strength, compaction characteristics, pavement-supporting capacity, and corrosion potential (pH, electrical resistivity, soluble chlorides, and soluble sulfates). The soil samples tested are identified on the boring logs. Laboratory test data are summarized on the boring logs in Appendix A and presented on individual test reports in Appendix B.

3.0 SITE CONDITIONS

3.1 SURFACE CONDITIONS

At the time of our exploration, the site consisted of an undeveloped lot containing some light vegetation and evidence of a previous excavation on the south side of the site (near proposed west building). The excavation around the proposed west building area was approximately 14 feet deep. The bottom of the excavation was approximately 140 feet long and 15 feet wide. Except for the excavation, the site was relatively level with slopes up to approximately 5%. The existing ground surface elevation outside the excavation area ranged from approximately 70 to 85 feet above mean sea level (MSL).

The site is the former location of PPG Industries, Inc.'s coatings and resins group facility. Significant environmental investigation and remediation activities have been performed at the site since facility closure and demolition in 2000. Site-wide soil and groundwater investigation activities were conducted from 2007 through 2008. Based on a cursory review of available documents, we understand that all soils containing chemicals of concern exceeding regulatory industrial screening levels were excavated and removed from the site in 2009, and remaining chemicals of concern at the site were determined not to pose an unacceptable health risk. (Earth Tech AECOM, 2009)

3.2 SUBSURFACE CONDITIONS

The subsurface soils generally consisted of fill material underlain by natural alluvial and eolian deposits. The thicknesses of the different subsurface materials, which varied across the project site, were idealized for each structure and are presented in Table 1.

Table 1 - SUMMARY OF GEOTECHNICAL CHARACTERISTICS

SOIL LAYER	APPROXIMATE DEPTH (feet)		UNCORRECTED SPT BLOW COUNT (bpf)	UNCORRECTED CPT TIP RESISTANCE (tsf)
	Top	Bottom		
Medium Dense to Dense Silty and Clayey Sands, Hard Lean Clays	0	10	62	107
Dense to Very Dense Silty and Clayey Sands	10	25	41	129
Hard Fat Clays	25	35	56	70
Very Dense Sands and Gravels	35	60	> 100	> 400

Notes:
- SPT = standard penetration test.
- CPT = cone penetration test.
- bpf = blows per foot.
- pcf = pounds per cubic foot.
- tsf = tons per square foot.
- Mean values are listed.
- Uncorrected = field measurements without modification.

The results of in situ percolation tests are summarized in Table 2.

Table 2 - RESULTS OF PERMEABILITY TESTS

TEST BORING	TEST DEPTH BOTTOM (feet)	APPROXIMATE SOIL TYPE[1]	HYDRAULIC CONDUCTIVITY (inch/hour)
DYB12-01	5	SM/CL	0.15
DYB12-02	5	SC/CL	0.09
DYB12-04	5	SM/SC	0.11
DYB12-06	5	SM/CL	0.17
DYB12-11	5	SM/CL	0.07

Notes:
1. Soil types reflected in test may be up to five feet above and below test bottom.
- CL = Lean Clay
- SC = Clayey Sand
- SM = Silty Sand

The on-site surficial soils at the proposed building locations were classified as having low expansion potential. However, highly expansive soils were encountered at lower depths. Expansive soils will undergo changes in volume with changes in moisture content (expand when saturated and shrink when dried), which can result in lifting and cracking of flatwork.

Groundwater was not encountered during drilling operations. However, the depth to groundwater at the project site was reported to be approximately 85 feet below ground surface (bgs) from previous investigations (Earth Tech AECOM, 2009).

4.0 CONCLUSIONS AND RECOMMENDATIONS

Based on geotechnical considerations, the site is suitable for the proposed project. The proposed buildings can be supported on shallow foundations placed on a layer of compacted fill. The proposed canopy structures can be supported either on shallow foundations placed on a layer of compacted fill or on cast-in-drilled-hole (CIDH) deep foundations.

4.1 SEISMIC/GEOLOGIC HAZARDS

The site, like most of Southern California, is subject to strong ground shaking during major earthquakes. Seismic design can be performed in accordance with the criteria listed in Table 3.

Table 3 - SEISMIC/GEOLOGIC DESIGN CRITERIA

CHARACTERISTIC	CRITERIA
Geographic Coordinates (Latitude/Longitude)	34.1364°, -117.90678°
Site Class[1]	D
Risk Category[1]	I, II, or III
Seismic Design Category[1]	E
S_s - mapped Risk Targeted maximum considered earthquake (MCE_R) spectral response acceleration at short periods (g)[1,3]	1.596
S_1 - mapped MCE_R spectral response acceleration at 1-second period (g) [1,2]	0.598
F_a - site coefficient[1,2]	1.0
F_v - site coefficient[1,2]	1.5
S_{MS} - adjusted MCE_R spectral response acceleration at short periods (g)[1,2]	1.596
S_{M1} - adjusted MCE_R spectral response acceleration at 1-second period (g)[1,2]	0.898
S_{DS} - design MCE_R spectral response acceleration at short periods (g)[1,2]	1.064
S_{D1} - design MCE_R spectral response acceleration at 1-second period (g)[1,2]	0.598
PGA - mapped MCE_G peak ground acceleration (g)[2,3]	0.61
F_{PGA} - site coefficient[2,3]	1.0
PGA_M - mapped MCE_G peak ground acceleration adjusted for site class effects, g[2,3]	0.61
Alquist - Priolo Special Study Zone Act[4]	Site outside a special study zone
California Seismic Hazards Mapping Act, Liquefaction Zone[5]	Site outside a liquefaction zone
California Seismic Hazards Mapping Act, Landslide Zone[5]	Site outside a landslide zone

Notes:
1. California Building Code (ICC; 2013) Section 1613.
2. American Society of Civil Engineers (ASCE) 7-10 mapped values obtained from U.S. Seismic Design Maps Web Application (United States Geological Survey [USGS], 2013).
3. CBC 2013 Section 1803.5.12 and ASCE 7-10 Section 11.8.3.
4. California Geologic Survey ([CGS]; formerly California Division of Mines and Geology, [CDMG]) 1994.
5. California Geological Survey (CGS; 1998).

4.2 EARTHWORK

Minor cuts and fills up to 14 feet are anticipated to construct a level site to prepare the building pads and provide compacted soil beneath shallow spread footings, pavement, and concrete flatwork.

4.2.1 Site Preparation and Grading

Prior to the start of construction, the following should be performed:

- All utilities should be located in the field and rerouted, removed, abandoned, or protected.
- Areas to be graded should be stripped of vegetation and debris, and the material removed from the site.

The upper soil should be excavated and replaced with compacted fill as shown on Figure 3. The bottom of the excavation should be:

- Scarified to a depth of 8 inches.
- Moisture-conditioned to above optimum moisture content.
- Compacted to at least 90% relative compaction.

The bottom of the excavation should be firm, hard, and unyielding.

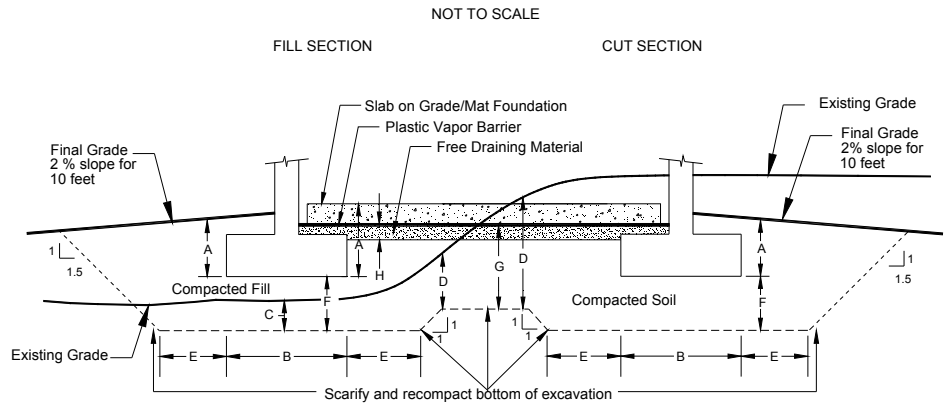

LOCATION	MINIMUM DIMENSIONS (feet)
A. Footing Embedment Below Subgrade	1.5
B. Footing Width	2
C. Excavation Below Existing Grade (Footing)	2
D. Excavation Below Existing Grade (Slab)	2
E. Excavation Beyond Footing	1
F. Compacted Soil/Fill Below Footing	1
G. Compacted Soil/Fill Below Slab	1
H. Free-Draining material	0.5
PRESSURE (psf)	
Static (net) Allowable Bearing Capacity (FS≥3)	2,500
Increase per Foot of Depth	500
Increase per Foot of Width	200
Maximum Static Bearing Capacity (FS≥3)	4,000
Maximum Transient Bearing Capacity (FS≥2)[1]	5,300

Notes:
1. The static bearing capacity should be increased by 33% to calculate the transient bearing capacity.
- FS = factor of safety.
- psf = pounds per square foot

Figure 3 - GRADING/FOUNDATION DETAILS

Where the soils at the bottom of the excavation preclude compaction, they should be excavated to a sufficient depth that a firm and unyielding surface is achieved at the planned bottom of excavation or the base of fill. Generally, an over-excavation depth of 1 to 2 feet is sufficient. Using geogrids and/or easily compactable material such as crushed rock can reduce the depth of excavation. The geogrids should satisfy the requirements of Standard Specification for Public Works Construction (Greenbook; Building News, 2012) Table 213.2.2 (B) Biaxial S1.

The geogrid should be installed by:

- Placing the geogrid on compacted fill that has been smoothed to remove surface obstructions.
- Nailing one end of the geogrid with 6-inch-long “U” staples and/or other approved fasteners to the end edges of the geogrid roll.

- Unrolling the geogrid without dragging.
- Pulling the geogrid taut to remove any slack.
- Placing fill from the fastened geogrid side to the unfastened geogrid side.
- Continually tensioning the geogrid by hand.
- Pinning the remaining end edges of the taut geogrid as described above.
- Overlapping the geogrid by at least 12 inches.
- Overlapping the geogrid in the direction of fill placement.
- Pushing a new layer of fill on top of the geogrid without creating waves in the geogrid and without the construction equipment contacting the geogrid.
- Compacting the new layer of fill as outlined above.
- Repeating the above steps as necessary for the remaining layers of geogrid.

Where fills are to be placed on ground with existing slopes steeper than 4H:1V (horizontal:vertical), such as fill placement within the footprint of the west building, the ground should be stepped or benched. The lowest bench or key should be a minimum of 10 feet wide and at least 2 feet deep, into competent material.

Fill and backfill should be compacted by:

- Placing in loose layers less than 8 inches thick.
- Moisture-conditioning to above optimum moisture content.
- Compacting to at least 95% relative compaction.

The compacted subgrade soils should be firm, hard, and unyielding.

Concrete flatwork (i.e., slabs-on-grade, sidewalks, hardscape, curbs, and gutters) should be underlain by a minimum of 12 inches of compacted engineered soil compacted to at least 90% relative compaction and at least 2% above optimum moisture content.

Concrete flatwork can be adversely influenced if underlain by potentially expansive soils. The on-site surficial soils were classified as having low expansion potential. To reduce the effects of expansive soils, it is imperative that expansive clays be maintained at least 2% above optimum moisture content. The exposed soils must not be allowed to dry before covering with the proposed flatwork, slab-on-grade, and/or foundations. This can be accomplished by watering the exposed soils daily during construction or covering the wetted soils with a plastic membrane until permanently covered. Failure to maintain moisture content above optimum moisture content until the clayey soils are covered by concrete will likely result in unacceptable differential movement of the improvements, such as concrete flatwork, slabs-on-grade, foundations, and hardscapes.

Contamination was not observed during the field exploration. However, there is a history of contamination at the site due to the previous industrial facility. We recommend that provisions be made for the handling of contaminated soil during construction. A chain of communication should be in place and procedures outlined to reduce construction interruptions. Procedures for handling contaminated soil include onsite personnel trained in accordance with 29 Code of Federal Regulations (CFR) Part 1910.120, chain-of-custody procedures and forms, equipment suitable for excavating and transporting contaminated soils, and a site selected for the proper disposal and treatment of contaminated soils. The California Department of Toxic Substances Control should be notified prior to any earthwork performed at the site.

Import materials for fill and select backfill should meet the criteria in Table 4. Select backfill is material placed within a horizontal distance of 5 feet or one-half of the wall height, whichever is greater, behind retaining/basement walls.

Table 4 - IMPORT FILL AND SELECT BACKFILL CRITERIA

CRITERIA	IMPORT FILL	SELECT BACKFILL
Maximum particle size (inches)	3	1
Maximum liquid limit (%)	10	5
Maximum plasticity index (%)	5	0
Maximum percentage passing the No. 200 sieve (%)	30	30
Minimum sand equivalent	10	20

The soils encountered in the borings are not expected to meet the above criteria for select backfill. The on-site soils may be used as compacted fill as shown on Figure 3. However, due to high clay contents, the soils may be more difficult to compact than soil meeting the criteria in Table 4 for import fill.

Site grading may be accomplished with conventional heavy-duty construction equipment. The fill should be compacted using soil compactors, designed for compaction, or a sheepsfoot roller, as recommended by the Caterpillar Performance Handbook (2012), or equivalent.

4.2.2 Excavations and Temporary and Permanent Slopes

The stability of temporary excavations is a function of several factors, including the total time the excavation is exposed, moisture condition, soil type and consistency, and contractor's operations. The contractor is responsible for excavation safety. As a guideline, temporary construction excavations greater than 3 feet but less than 15 feet deep should be planned with slopes no steeper than 1.5H:1V (horizontal to vertical). For steeper temporary construction slopes or deeper excavations, shoring should be provided for stability and protection. The contractor should strictly adhere to grading requirements of the City of Torrance and applicable health and safety regulations, including those of the Occupational Safety and Health Administration (OSHA).

Permanent compacted fill slopes should be planned no steeper than 2H:1V. The slopes should be paved or covered with vegetation to reduce surface erosion.

4.2.3 Drainage

Based on the results of field tests and correlations with particle size, we estimate the saturated hydraulic conductivity of the subsurface soils will be approximately 0.1 inches per hour. Therefore, these soils are non-permeable and were classified as hydrologic soil group (HSG) D (USDA, 1986). The site soil infiltration rate is significantly lower than the minimum infiltration rate of 0.5 inches per hour recommended by the County of Los Angeles (2011b) for use of

infiltration facilities on site. Therefore, use of infiltration as a Best Management Practice (BMP) is not recommended.

4.3 FOUNDATION DESIGN

The proposed buildings can be supported on shallow foundations placed on a layer of compacted fill as shown on Figure 3. The static and temporary allowable bearing capacities include FS of at least 3 and 2, respectively, against shear failure. For properly constructed foundations supported on compacted fill, total static settlement due to the proposed structural loads is estimated to be less than 1 inch. Differential static settlements between similarly loaded footings are expected to be less than ½ inch. For mat foundation, a subgrade modulus of 300 kips per cubic foot can be used for design.

Alternatively, the proposed canopy structures at the bus berths can be supported on isolated foundations with 30-inch-diameter CIDH piles. The axial loads acting on these piles are anticipated to be small, and therefore, the design of the piles will be governed by the lateral loads acting on the piles. The static settlement of the isolated CIDH pile under light axial load should be less than ½ inch in the improved ground area.

The design of the CIDH piles to resist lateral loads is discussed in Section 4.4.2.

4.4 RESISTANCE TO LATERAL LOADS AND LATERAL EARTH PRESSURE

4.4.1 Shallow Foundations

Lateral loads can be resisted by an allowable passive soil pressure and base friction, as outlined on Figure 4 for compacted fill, applied against below-grade walls and foundation elements. The lateral resistance may be calculated using the following methods: 50% of passive resistance plus 50% of base friction, 100% passive resistance only, or 100% of the base friction only.

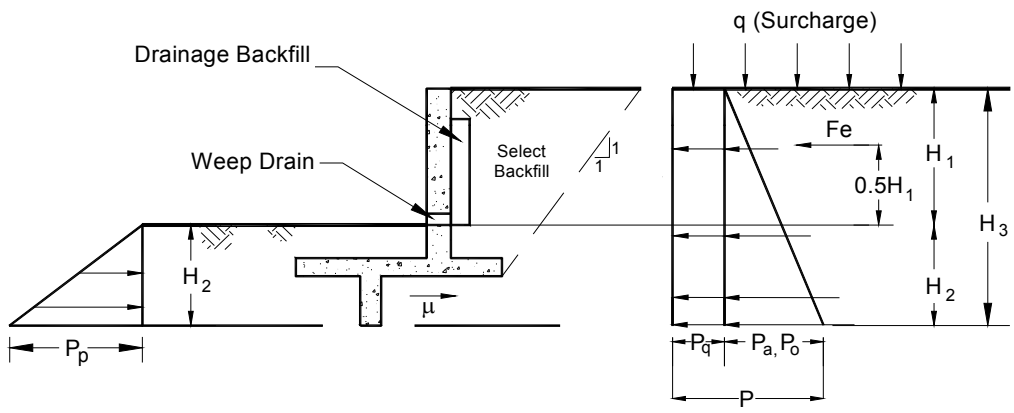

$P_p = 300\ H_2 \leq 4{,}000$ psf $\mu = 0.4$	Cantilever Walls $P = P_a + P_q = 40\ H_3 + 0.4q$ $Fe = 10\ H_1^2$	Restrained Walls $P = P_o + P_q = 55\ H_3 + 0.5q$ $Fe = 10\ H_1^2$

Notes:

- All values of height (H) in feet, pressure (P) and surcharge (q) in pounds per square foot (psf), and force (F) in pounds.
- P_p, P_a, and P_o are the passive, active, and at-rest earth pressures, respectively; Fe is the incremental seismic force.
- P_q is the incremental surcharge pressure; μ is the allowable friction coefficient applied to dead normal (buoyant) loads. Fe is in addition to the active and at-rest pressures. Below groundwater, in areas of potential pipeline rupture, or areas of potential surface water infiltration, active and at-rest pressure should be reduced by 50 percent and hydrostatic pressure should be added to active and at-rest pressures. P_p should be reduced by 50 percent below the groundwater.
- For 2H:1V slopes above the wall, increase the active and at-rest pressures by 50 percent; for 1.5H:1V slope, increase the active and at-rest pressures by 100 percent.
- Neglect the upper 1 foot for passive pressure unless the surface is contained by a pavement or slab.
- Peak ground acceleration (PGA) of 0.45g was used to calculate Fe, 50 percent of the PGA for cantilever walls and 75 percent of PGA for restrained walls was used.
- See Figure 5 for drainage details.

Figure 4 - LATERAL EARTH PRESSURES

Retaining and subterranean walls should be designed to resist lateral earth pressures with the equivalent fluid pressures as illustrated on Figure 4. Lateral earth pressures are presented for walls free to rotate and restrained walls. At-rest earth pressures (restrained walls) should be used for basement walls and where the top of the wall is not expected to move laterally more than 0.001 H_1 (see Figure 4). The lateral earth pressures on Figure 4 are based on the backfill material noted in Table 4. See Figure 5 for typical sections of wall drains.

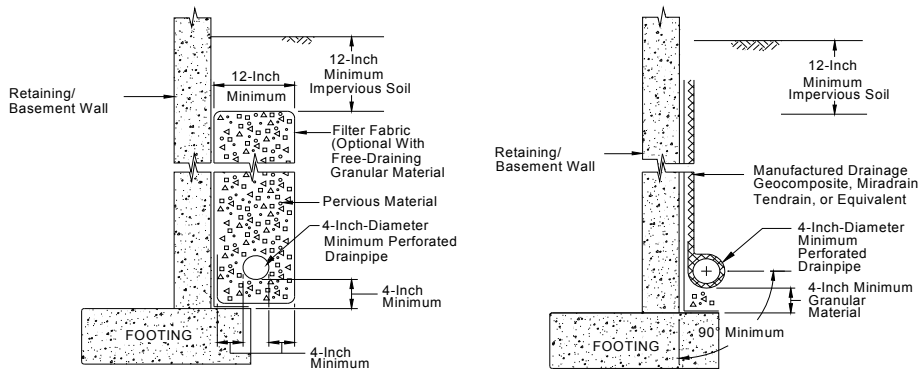

MATERIAL	CALTRANS SPECIFICATIONS	GREENBOOK SPECIFICATIONS
Free-Draining Granular Material	68-2.02 (Class 2)	300-3.5.2
Geotextile Filter Fabric	88-1.02B	300-8
Perforated Pipe	68-2.02	207-13.4

Notes:
- Drainpipe should drain to an outlet.
- Filter fabric wraps completely around perforated drainpipe and pervious materials.

Figure 5 - RETAINING OR BASEMENT WALL DRAINAGE

For retaining walls less than 3 feet high that have a granular select backfill (see Table 4), the wall drains on Figure 5 can be omitted. For retaining walls where the designer can show that hydrostatic lateral pressures resulting from infiltration of surface water, pipeline rupture, or groundwater will not occur, then design for hydrostatic pressure and wall drainage are not required.

4.4.2 Deep Foundations

If CIDH pile foundations are to be used for the canopy structures at the bus berths, the lateral resistance of the piles can be determined in accordance with the CBC (ICC, 2013). When using the embedded post and pole equations, a lateral soil bearing pressure of 300 psf per foot can be used. The upper 1 foot of passive resistance on the pole foundation should be neglected unless the soil is confined by pavement or slab. Also, the passive pressures acting on the isolated foundations can be applied over twice the pole foundation diameter.

4.5 SLABS-ON-GRADE AND CONCRETE FLATWORK

Slabs-on-grade should be underlain by compacted free-draining granular materials as outlined on Figure 3. The free-draining granular material should satisfy the requirements listed in the American Concrete Institute's ACI 360R-10 guideline Section 4.6.4. However, we recommend a maximum of 5% fines (passing the No. 200 sieve).

Moisture vapor will tend to migrate through the slab-on-grade. A waterproofing specialist should be consulted. To reduce vapor migration through the floor building slab, the following should be considered:

- Minimum 10-millimeter-thick plastic vapor barrier with joints overlapped by at least 6 inches and taped.
- Sealing the plastic vapor barrier around plumbing, electrical, and other conducts.
- No sand above the plastic vapor barrier.
- Minimum 7-day wet cure with no curing compounds.
- Two-month drying period before floor coverings are placed.
- Concrete mix design, materials, placement, curing, and finishing in conformance with the Greenbook and the American Concrete Institute (ACI; 2004, 2010, 2011).

The plastic vapor barrier should satisfy the requirements of ASTM E1745 (Class “A”). ACI 302.1R-04 defines a vapor barrier as having a water vapor transmission rate (WVTR) of 0.00 perms, plus a testing tolerance generally of a WVTR of 0.008 perms or less when tested in accordance with ASTM E96. Note that commonly used “poly” or "visqueen” does not meet ASTM E1745 requirements. Vapor barriers should be installed in accordance with ASTM E1643. Care should be taken to seal the plastic vapor barrier and avoid puncturing the plastic vapor barrier during construction.

While the surficial soils encountered in the subsurface exploration were generally sandy, expansive soils were present at the site at deeper elevations. Expansive soils are not anticipated at proposed improvement elevations. However, if expansive soils are encountered below the slab-on-grade and concrete flatwork, additional items to consider in addition to the subgrade moisture conditioning noted in Section 4.2.1 include:

- A sublayer of nonexpansive granular material.
- Reinforcement (or post-tensioning) of the slab.
- Moisture barriers and drains.

4.6 UTILITY TRENCHES

Utility trenches (either open or backfilled) that parallel structures, pavement, or flatwork should be planned so that they do not extend below a plane with a downward slope of 1.5H:1V from the bottom edge of footings, pavement, or flatwork. Temporary shoring to provide footing,

pavement, flatwork, or utility support is recommended unless localized settlements on the order of 1% of the trench depth can be tolerated.

All excavations should comply with appropriate safety standards outlined in Section 4.2.2.

Utility pipes should be placed on the bottom of a neatly cut trench on a layer of bedding as outlined on Figure 6 or according to the manufacturer's recommendations, whichever is greater.

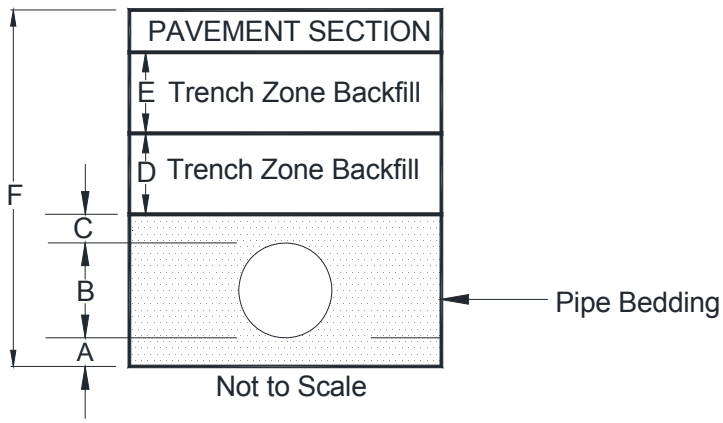

MATERIAL	MINIMUM THICKNESS (feet)	MINIMUM RELATIVE COMPACTION[1] (%)	BACKFILL SPECIFICATIONS	
			Caltrans Specifications	Greenbook Specifications
Pipe Bedding	A = 0.33 or B/4	--	19-3.02E	306-1.2.1
Pipe Zone	C = 1	--	19-3.02E	306-1.2.1
Trench Zone	D varies	90[2]	--	--
Trench Zone[3]	E = 2	95	--	--

Notes:
1. Based on ASTM D1557.
2. To reduce settlement, use 95 percent relative compaction.
3. E = 0 if no pavement or settlement-sensitive structures at surface.

- Minimum values; use manufacturer's recommendations if greater.
- For slurry backfill, Caltrans Specification 19-3.02D can be used.
- See Figure 7 for pavement section details.

Figure 6 - PIPELINE BACKFILL SCHEMATIC

4.7 PAVEMENT THICKNESS DESIGN

Recommended minimum dense-graded hot mix asphalt (HMA) and Portland cement concrete (PCC) pavement sections are presented on Figure 7. The recommended minimum pavement sections are based on the following:

- R-value of 20.
- Caltrans design method.

- Assumed traffic indices (TI) of 5 and 13 for light automobile and bus traffic areas, respectively. Actual traffic indices should be evaluated for final design.

The minimum thickness of compacted basement soil and aggregate base are outlined on Figure 7. The basement soils should be firm, hard, and unyielding and not "pumping" prior to placing the aggregate base. The aggregate base requirements and specifications are outlined on Figure 7. If the basement soil cannot be compacted, the soil should be overexcavated as noted in Section 4.2.

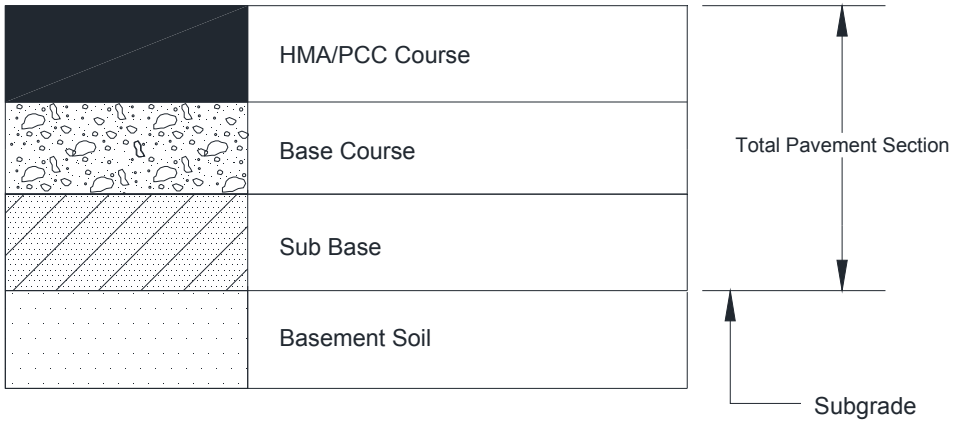

COURSE	MINIMUM THICKNESS (inches)			
	HMA Over Base		PCC Over Base	
	TI = 13	TI = 5	TI = 13	TI = 5
HMA/PCC[1]	12	5	11	9
Base[2]	15	4	6[4]	12
Basement Soil[3]	6	6	8.5[5]	6

Notes:
1. Dense graded hot mix asphalt (HMA) and Portland cement concrete (PCC) should satisfy the requirements of Caltrans Standard Specifications Sections 39 and 40, respectively; or Greenbook Sections 203, and 201 and 302, respectively.
2. Except where noted otherwise, base course = Class 2 aggregate base in accordance with Caltrans Standard Specifications Section 26 or crushed aggregate base or crushed miscellaneous base in accordance with Greenbook Sections 200-2.2 and 200-2.4, respectively. The minimum relative compaction is 95 percent.
3. Compacted in-place natural soil or fill; the minimum is 95 percent relative compaction.
4. Minimum Thickness for Class Lean Concrete Base.
5. Minimum Thickness for Class 4 Aggregate Subbase.

Figure 7 - PAVEMENT THICKNESS

Generally, rigid PCC pavement costs more for initial construction but requires less maintenance than flexible HMA pavements. For heavy wheel loads along bus routes and terminal areas, PCC pavement is preferred. For PCC pavements, the following should be considered:

- Construct pavements in a 15-foot-square grid or smaller (20-foot-rectangular areas if a square is not practical).

- Expansion joints should extend the full depth of the pavement.
- Potential joints depth of ¼ of the pavement thickness.
- Cure for a minimum of 7 days.
- No traffic until the compressive strength exceeds 2,000 pounds per square inch (psi).
- Minimum compressive strength of 3,000 psi.
- Dowels to strengthen joints.
- Minimum slope of 1%.

Structural section requirements are outlined on Figure 7. The subgrade soils should be firm, hard, and unyielding and not "pumping" under the loads of the construction and paving equipment. The basement soil (subgrade) and aggregate base should be compacted to at least 95% relative compaction. If the basement soil cannot be compacted to at least 95% relative compaction, the subgrade should be overexcavated as noted in Section 4.2.1.

The dense-graded HMA and PCC layers should not be replaced with open-graded asphalt concrete and pervious PCC, respectively, to provide a fully permeable pavement. A separate design is recommended for fully permeable pavements.

5.0 PLAN REVIEW, CONSTRUCTION OBSERVATION, AND TESTING

DYA should be retained to review the finished grading plans, foundation plans, and related specifications for conformance with the intent of our recommendations. The review will enable DYA to modify the recommendations if final design conditions are different than presently understood.

During construction, DYA should provide field observation and testing to check that the site preparation, excavation, foundation installation, and finished grading conform to the intent of these recommendations, project plans, and specifications. This would allow DYA to develop supplemental recommendations as appropriate for the actual soil conditions encountered and the specific construction techniques used by the contractor.

As needed during construction, DYA should be retained to consult on geotechnical questions, construction problems, and unanticipated site conditions.

6.0 LIMITATIONS

This report has been prepared for this project in accordance with generally accepted geotechnical engineering practices common to the local area. No other warranty, expressed or implied, is made.

The analyses and recommendations contained in this report are based on the literature review, field exploration, and laboratory testing conducted in the area. The results of the field exploration indicate subsurface conditions only at the specific locations and times and only to the depths penetrated. They do not necessarily reflect strata variations that may exist between such locations. Although subsurface conditions have been explored as part of the exploration, we have not conducted chemical laboratory testing on samples obtained or evaluated the site with respect to the presence or potential presence of contaminated soil or the groundwater conditions.

The validity of our recommendations is based in part on assumptions about the stratigraphy. Observations during construction can help confirm such assumptions. If subsurface conditions different from those described are noted during construction, recommendations in this report must be re-evaluated. DYA should be retained to observe earthwork construction in order to help confirm that our assumptions and recommendations are valid or to modify them accordingly. In accordance with CBC Chapter 17 Section 1704, DYA cannot assume responsibility or liability for the adequacy of recommendations if we do not observe construction.

This report is intended for use only for the project described. In the event that any changes in the nature, design, or location of the facilities are planned, the conclusions and recommendations contained in this report should not be considered valid unless the changes are reviewed and conclusions of this report modified or verified in writing by DYA. We are not responsible for any claims, damages, or liability associated with the interpretation of subsurface data or reuse of the subsurface data or engineering analyses without our express written authorization.

7.0 BIBLIOGRAPHY

American Concrete Institute, 2004, ACI 302.1R-04, Guide for Concrete Floor and Slab Construction.

American Concrete Institute, 2010, ACI 360R-10, Guide to Design of Slabs-on-Ground.

American Concrete Institute, 2011, ACI 318, Building Code Requirements for Structural Concrete.

American Society of Civil Engineers/Structural Engineers Institute (ASCE/SEI 7-05), 2007, Minimum Design Loads for Buildings and Other Structures.

American Society for Testing and Materials, 2010, Annual Book of Standards, Volumes 4.08 and 4.09, Soil and Rock.

Building News, 2012, "Greenbook," Standard Specifications for Public Works Construction.

California Department of Transportation, 2003, Corrosion Guidelines, Materials Engineering and Testing Service, Corrosion Technology Branch, September 2003.

California Department of Transportation, 2006, Highway Design Manual, Sixth Edition.

California Department of Transportation, 2010a, Storm Water Quality Handbook: Project Planning and Design Guide, July 2010.

California Department of Transportation, 2010b, Standard Specifications.

California Division of Mines and Geology, 1994, Fault Rupture Hazard Zones in California, Special Publication No. 42.

California Geological Survey, 1998, Open File Report 035, Seismic Hazard Evaluation for the Torrance 7.5-Minute Quadrangle, Los Angeles, California, 1998.

California Geological Survey, 2008, Special Publication 117A, Guidelines for Evaluating and Mitigating Seismic Hazards in California, September 11, 2008.

California Geological Survey, 2010, Special Report 217, Geologic Compilation of Quarternary Surficial Deposits in Southern California, July 2010.

Caterpillar Performance Handbook, 2012, Caterpillar, Inc., Edition 42.

County of Los Angeles Department of Public Works, 2010, Manual for Preparation of Geotechnical Reports, July 2010.

County of Los Angeles Department of Public Works, 2011a, Solid Waste Information Management System, http://dpw.lacounty.gov/epd/swims/methane/search-methane-hazards.aspx.

County of Los Angeles Department of Public Works, 2011b, Administrative Manual, County of Los Angeles Department of Public Works, Geotechnical and Materials Engineering Division, January 3, 2011.

Diaz Yourman & Associates, 2013, Geotechnical Services for Advanced Conceptual Engineering, Torrance Transit Park and Ride Regional Terminal, 465 Crenshaw Boulevard, Torrance, California, June 13, 2013.

Earth Tech AECOM, 2009, Final Site-wide Soil and Groundwater Investigation Report, Former PPG Industries, Inc. Coatings and Resins Group Facility, 465 Crenshaw Boulevard, Torrance, California 90509, November 24, 2009.

International Code Council (ICC), 2013, California Building Code, California Code of Regulations, Title 24, Part 2.

Occupational Safety and Health Administration, 2008, OSHA Standards For The Construction Industry, 29 CFR Part 1926 With Amendments as of January 2008.

U.S. Bureau of Reclamation, 1985, Groundwater Manual.

U.S. Department of Agriculture, Urban Hydrology for Small Watersheds, TR-55, June 1986.

U.S. Geologic Survey, 2009, Earthquake Ground Motion Parameters, version 5.0.9a, October 21, 2009.

APPENDIX A
FIELD EXPLORATION

APPENDIX A- FIELD EXPLORATION

The field exploration for the proposed project consisted of drilling 13 borings (DYB-1 through DYB13) and advancing 9 cone penetration tests (CPT) to depths ranging from approximately 5 to 64.5 feet. The approximate boring and CPT locations are shown on Figure 2.

Prior to drilling the borings and advancing the CPTs, the field exploration locations were marked in the field and Underground Service Alert (USA) was notified. The field exploration locations were subsequently checked for underground utilities using geophysical techniques. The geophysical survey was performed by Southwest Geophysics, Inc. on Tuesday May 29, 2012.

Borings were drilled by 2R Drilling, Inc. on August 8, 2012, and August 9, 2012, with a truck-mounted CME 75 drill rig using hollow-stem-auger drilling techniques. Our field engineer observed the drilling operations and collected drive samples for visual examination and subsequent laboratory testing. Drive samples were collected with a 2.4-inch-inside-diameter (3.0-inch-outside-diameter) modified California split-barrel sampler lined with brass tubes and a standard split-spoon penetrometer with dimensions in accordance with ASTM D3550 and D1586, respectively. Both samplers were driven with a 140-pound automatic trip hammer falling 30 inches. Based on communication with the drilling company, the hammer used during the field exploration was last calculated on April 14, 2011; the efficiency rating was 79%.

The hammer blows required to drive the modified California sampler were converted to equivalent standard penetration test (SPT) N-values by multiplying by 0.65 (N = 0.65 x modified California blows per foot). A sampler driving refusal criteria of 50 hammer blows for less than 6 inches of penetration for the modified California or SPT samplers was used. An equivalent SPT blow count was then calculated by multiplying the sampler blow count (usually 50 blows) by the ratio of 6 inches divided by the actual sampler penetration in inches. If the modified California sampler met driving refusal, then the prorated equivalent SPT blow count was further modified as noted above for samplers that did not meet sampler driving refusal. Field unconfined compression strengths were obtained using a pocket penetrometer.

Soils encountered in the borings were classified in general accordance with the ASTM Soil Classification System (ASTM D2487, which is summarized on Plate A1, and D2488). Boring logs presented on Plates A2 through A17 were prepared from visual examination of the samples, cuttings obtained during drilling operations, and results of laboratory tests.

Groundwater was not encountered during the field exploration to a depth of 60 feet bgs. Borings were backfilled with cement-bentonite slurry.

The CPTs were advanced by Middle Earth Geo Testing, Inc. on June 6, 2012, with a truck-mounted rig. The CPTs were advanced in general accordance with ASTM D5778 using an

electronic cone penetrometer. The results of the CPT exploration are presented at the end of this appendix.

Field permeability (percolation) tests were performed in Borings DYB12-01, DYB12-02, DYB12-04, DYB12-06, and DYB12-11 at depths of approximately 5 feet, in general accordance with the United States Bureau of Reclamation (USBR) Procedure 7300-89 (1985). A 60-gallon reservoir equipped with a flow totalizer was used to fill the permeability test holes with water. The flow from the reservoir was controlled to maintain a constant height of water in the permeability test hole. Time and flow measurements were used to obtain a discharge rate to estimate a steady-state condition. Percolation tests were backfilled with gravel, and the surface covered with ground surface soils at the conclusion of the test. The permeability calculations were performed in general accordance with USBR 7300-89.

The boring and CPT locations were identified in the field by measuring using a hand-held global positioning system (GPS) unit with an estimated 10-foot horizontal accuracy.

The exploration derived waste (IDW) was initially stored in 55-gallon drums and left on site during its characterization. The characterization and IDW disposal was performed by American Integrated Services, Inc.

SOIL CLASSIFICATION SYSTEM-ASTM D2487

MAJOR DIVISIONS			SYMBOLS GRAPH	SYMBOLS LETTER	TYPICAL DESCRIPTIONS
COARSE-GRAINED SOILS MORE THAN 50% OF MATERIAL IS LARGER THAN NO. 200 SIEVE SIZE	GRAVEL AND GRAVELLY SOILS MORE THAN 50% OF COARSE FRACTION RETAINED ON NO. 4 SIEVE	CLEAN GRAVELS (LITTLE OR NO FINES)		GW	WELL-GRADED GRAVELS, GRAVEL - SAND MIXTURES, LITTLE OR NO FINES
				GP	POORLY GRADED GRAVELS, GRAVEL - SAND MIXTURES, LITTLE OR NO FINES
		GRAVELS WITH FINES (APPRECIABLE AMOUNT OF FINES)		GM	SILTY GRAVELS, GRAVEL - SAND - SILT MIXTURES
				GC	CLAYEY GRAVELS, GRAVEL - SAND - CLAY MIXTURES
	SAND AND SANDY SOILS MORE THAN 50% OF COARSE FRACTION PASSING ON NO. 4 SIEVE	CLEAN SANDS (LITTLE OR NO FINES)		SW	WELL-GRADED SANDS, GRAVELLY SANDS, LITTLE OR NO FINES
				SP	POORLY GRADED SANDS, GRAVELLY SAND, LITTLE OR NO FINES
		SANDS WITH FINES (APPRECIABLE AMOUNT OF FINES)		SM	SILTY SANDS, SAND - SILT MIXTURES
				SC	CLAYEY SANDS, SAND - CLAY MIXTURES
FINE-GRAINED SOILS MORE THAN 50% OF MATERIAL IS SMALLER THAN NO. 200 SIEVE SIZE	SILTS AND CLAYS	LIQUID LIMIT LESS THAN 50		ML	INORGANIC SILTS AND VERY FINE SANDS, ROCK FLOUR, SILTY OR CLAYEY FINE SANDS OR CLAYEY SILTS WITH SLIGHT PLASTICITY
				CL	INORGANIC CLAYS OF LOW TO MEDIUM PLASTICITY, GRAVELLY CLAYS, SANDY CLAYS, SILTY CLAYS, LEAN CLAYS
				OL	ORGANIC SILTS AND ORGANIC SILTY CLAYS OF LOW PLASTICITY
	SILTS AND CLAYS	LIQUID LIMIT GREATER THAN 50		MH	INORGANIC SILTS, MICACEOUS OR DIATOMACEOUS FINE SAND OR SILTY SOILS
				CH	INORGANIC CLAYS OF HIGH PLASTICITY
				OH	ORGANIC CLAYS OF MEDIUM TO HIGH PLASTICITY, ORGANIC SILTS
HIGHLY ORGANIC SOILS				PT	PEAT, HUMUS, SWAMP SOILS WITH HIGH ORGANIC CONTENTS

NOTE: DUAL SYMBOLS ARE USED TO INDICATE BORDERLINE SOIL CLASSIFICATIONS

"Push" Sampler

Split Barrel "Drive" Sampler With Liner

Standard Penetration Test (SPT) Sampler

Bag Sample

Concrete/Rock Core

Groundwater Surface

NP = Nonplastic
EI = Expansion Index Test
SG = Specific Gravity
SE = Sand Equivalent
UU = Unconfined Comp.
CD = Consol. Drained Triaxial.
CU = Consol. Undrained Triaxial.
UU = Undrained, Unconsol. Triaxial.
R = R-Value
CR = Corrosivity
DS = Direct Shear
C = Consolidation
CL = Collapse Potential
PA = Particle size; HD = Hydrometer
CP = Compaction Test
P = Permeability Test
[PID] Reading in ppm above background

Torrance Transit Center
Project No. 2013-031

PLATE
A1

Library: DYLIB.GLB; Template: DYLG; Prj ID: 2013-031.GPJ

BORING LOCATION:	See Figure 2	**ELEVATION AND DATUM (feet):**	71 MSL
LATITUDE:	33° 50' 37.5" N	**LONGITUDE:**	118° 19' 45.8" W
DRILLING EQUIPMENT:	CME-75	**DRILLING METHOD:**	Hollow Stem Auger
BORING DIAMETER (inches):	8	**BORING DEPTH (feet):**	6.5
DATE STARTED: 8-8-12	**COMPLETED:** 8-8-12	**HAMMER TYPE:** Automatic	**EFFICIENCY:** 79%
DRILLING CONTRACTOR:	2R Drilling, Inc.	**HAMMER DROP:** 30 inches	**WEIGHT:** 140 lbs
LOGGED BY: AJA	**CHECKED BY:** BDD	**DRIVE SAMPLER DIAMETER (inches)**	**ID:** 2.4 **OD:** 3

Elevation (feet)	Depth (feet)	Sampler	Symbol	Blows per 6 Inches	SPT N60 Blows per Foot	Field Unc. Comp. Str. (tsf)	DESCRIPTION	Dry Density (pcf)	Moisture Content (%)	Liquid Limit (%)	Plasticity Index (%)	Percent Passing #200 Sieve	Other Tests [PID]
70							SILTY SAND (SM): strong brown, moist, dense, fine SAND, trace fine GRAVEL, trace clay nodules						
				19 35 23	50								
	5			14 22 35	49								
65						>4	SANDY LEAN CLAY (CL): olive brown, moist, hard, medium plasticity, fine SAND						
							Bottom of boring at 6.5 feet. Groundwater not encountered during drilling. Boring prepared for percolation test. Cuttings collected and taken offsite.						
	10												
60													
	15												
55													
	20												
50													
	25												
45													

LOG OF BORING DYB12-01

Torrance Transit Center

Project No. 2013-031

PLATE

A2

Library: DYLIB.GLB; Template: DYLG; Prj ID: 2013-031.GPJ

BORING LOCATION:	See Figure 2	**ELEVATION AND DATUM (feet):**	68 MSL
LATITUDE:	33° 50' 36.3" N	**LONGITUDE:**	118° 19' 50.4" W
DRILLING EQUIPMENT:	CME-75	**DRILLING METHOD:**	Hollow Stem Auger
BORING DIAMETER (inches):	8	**BORING DEPTH (feet):**	5
DATE STARTED: 8-8-12	**COMPLETED:** 8-8-12	**HAMMER TYPE:** Automatic	**EFFICIENCY:** 79%
DRILLING CONTRACTOR:	2R Drilling, Inc.	**HAMMER DROP:** 30 inches	**WEIGHT:** 140 lbs
LOGGED BY: AJA	**CHECKED BY:** BDD	**DRIVE SAMPLER DIAMETER (inches)**	**ID:** 2.4 **OD:** 3

Elevation (feet)	Depth (feet)	Sampler	Symbol	Blows per 6 Inches	SPT N60 Blows per Foot	Field Unc. Comp. Str. (tsf)	DESCRIPTION	Dry Density (pcf)	Moisture Content (%)	Liquid Limit (%)	Plasticity Index (%)	Percent Passing #200 Sieve	Other Tests [PID]
							CLAYEY SAND with GRAVEL (SC): dark olive brown, moist, very dense, fine SAND, fine GRAVEL						
				35 50/6"	86	>4	LEAN CLAY with SAND (CL): dark olive brown, moist, hard, medium plasticity, iron oxide stains						
65													
	5			30 50/6"	86	>4	SANDY LEAN CLAY (CL): olive brown, moist, hard, low plasticity, fine SAND, iron oxide stains						
							Bottom of boring at 5 feet. Groundwater not encountered during drilling. Boring prepared for percolation test. Cuttings collected and taken offsite.						
60													
	10												
55													
	15												
50													
	20												
45													
	25												
40													

LOG OF BORING DYB12-02

Torrance Transit Center

Project No. 2013-031

PLATE

A3

Library: DYLIB.GLB; Template: DYLG; Prj ID: 2013-031.GPJ

BORING LOCATION:	See Figure 2	**ELEVATION AND DATUM (feet):**	71 MSL
LATITUDE:	33° 50' 36.3" N	**LONGITUDE:**	118° 19' 44.7" W
DRILLING EQUIPMENT:	CME-75	**DRILLING METHOD:**	Hollow Stem Auger
BORING DIAMETER (inches):	8	**BORING DEPTH (feet):**	6.5
DATE STARTED: 8-8-12	**COMPLETED:** 8-8-12	**HAMMER TYPE:** Automatic	**EFFICIENCY:** 79%
DRILLING CONTRACTOR:	2R Drilling, Inc.	**HAMMER DROP:** 30 inches	**WEIGHT:** 140 lbs
LOGGED BY: AJA	**CHECKED BY:** BDD	**DRIVE SAMPLER DIAMETER (inches)**	**ID:** 2.4 **OD:** 3

Elevation (feet)	Depth (feet)	Sampler	Symbol	Blows per 6 Inches	SPT N60 Blows per Foot	Field Unc. Comp. Str. (tsf)	DESCRIPTION	Dry Density (pcf)	Moisture Content (%)	Liquid Limit (%)	Plasticity Index (%)	Percent Passing #200 Sieve	Other Tests [PID]
70				5 8 15	20	3.25	SILTY SAND (SM): dark yellowish brown, moist, medium dense, fine SAND						
				17 30 46	65	4	LEAN CLAY with SAND (CL): olive brown, moist, very stiff, medium plasticity, trace fine SAND hard						
	5			13 15 17	42		CLAYEY SAND (SC): light olive brown, moist, medium dense, nonplastic, fine SAND						
65							Bottom of boring at 6.5 feet. Groundwater not encountered during drilling. Boring backfilled with cement slurry. Cuttings collected and taken offsite.						
	10												
60													
	15												
55													
	20												
50													
	25												
45													

LOG OF BORING DYB12-03

Torrance Transit Center

Project No. 2013-031

PLATE

A4

Library: DYLIB.GLB; Template: DYLG; Prj ID: 2013-031.GPJ

BORING LOCATION:	See Figure 2	**ELEVATION AND DATUM (feet):**	69 MSL
LATITUDE:	33° 50' 34.9" N	**LONGITUDE:**	118° 19' 48.3" W
DRILLING EQUIPMENT:	CME-75	**DRILLING METHOD:**	Hollow Stem Auger
BORING DIAMETER (inches):	8	**BORING DEPTH (feet):**	6.5
DATE STARTED: 8-8-12	**COMPLETED:** 8-8-12	**HAMMER TYPE:** Automatic	**EFFICIENCY:** 79%
DRILLING CONTRACTOR:	2R Drilling, Inc.	**HAMMER DROP:** 30 inches	**WEIGHT:** 140 lbs
LOGGED BY: AJA	**CHECKED BY:** BDD	**DRIVE SAMPLER DIAMETER (inches)**	**ID:** 2.4 **OD:** 3

Elevation (feet)	Depth (feet)	Sampler	Symbol	Blows per 6 Inches	SPT N60 Blows per Foot	Field Unc. Comp. Str. (tsf)	DESCRIPTION	Dry Density (pcf)	Moisture Content (%)	Liquid Limit (%)	Plasticity Index (%)	Percent Passing #200 Sieve	Other Tests [PID]
							SILTY SAND (SM): light olive brown, moist, dense, fine SAND						
				19 22 37	50		CLAYEY SAND (SC): olive brown, moist, very dense, medium plasticity, fine SAND, iron oxide stains					40	PA
65							nonplastic, some iron oxide stains						
	5			23 39 43	70							38	PA [3.3]
							Bottom of boring at 6.5 feet. Groundwater not encountered during drilling. Boring prepared for percolation test. Cuttings collected and taken offsite.						
60													
	10												
55													
	15												
50													
	20												
45													
	25												
40													

LOG OF BORING DYB12-04

Torrance Transit Center

Project No. 2013-031

PLATE

A5

Library: DYLIB.GLB; Template: DYLG; Prj ID: 2013-031.GPJ

BORING LOCATION:	See Figure 2	**ELEVATION AND DATUM (feet):**	71 MSL
LATITUDE:	33° 50' 33.8" N	**LONGITUDE:**	118° 19' 49.5" W
DRILLING EQUIPMENT:	CME-75	**DRILLING METHOD:**	Hollow Stem Auger
BORING DIAMETER (inches):	8	**BORING DEPTH (feet):**	5.5
DATE STARTED: 8-8-12	**COMPLETED:** 8-8-12	**HAMMER TYPE:** Automatic	**EFFICIENCY:** 79%
DRILLING CONTRACTOR:	2R Drilling, Inc.	**HAMMER DROP:** 30 inches	**WEIGHT:** 140 lbs
LOGGED BY: AJA	**CHECKED BY:** BDD	**DRIVE SAMPLER DIAMETER (inches)**	**ID:** 2.4 **OD:** 3

Elevation (feet)	Depth (feet)	Sampler	Symbol	Blows per 6 Inches	SPT N60 Blows per Foot	Field Unc. Comp. Str. (tsf)	DESCRIPTION	Dry Density (pcf)	Moisture Content (%)	Liquid Limit (%)	Plasticity Index (%)	Percent Passing #200 Sieve	Other Tests [PID]
70							SILTY SAND (SM): light olive brown, moist, dense, fine SAND, trace fine GRAVEL						
				41 36 30	57		pale brown						
							CLAYEY SAND (SC): dark brown, moist, very dense, low plasticity, fine SAND		9	22	11	48	PA
	5			50/6"	86		brown						
65							Bottom of boring at 5.5 feet. Groundwater not encountered during drilling. Boring backfilled with cement slurry. Cuttings collected and taken offsite.						
	10												
60													
	15												
55													
	20												
50													
	25												
45													

LOG OF BORING DYB12-05

Torrance Transit Center

Project No. 2013-031

PLATE

A6

Library: DYLIB.GLB; Template: DYLG; Prj ID: 2013-031.GPJ

BORING LOCATION:	See Figure 2	**ELEVATION AND DATUM (feet):**	75 MSL
LATITUDE:	33° 50' 33.7" N	**LONGITUDE:**	118° 19' 44.8" W
DRILLING EQUIPMENT:	CME-75	**DRILLING METHOD:**	Hollow Stem Auger
BORING DIAMETER (inches):	8	**BORING DEPTH (feet):**	5.5
DATE STARTED: 8-9-12	**COMPLETED:** 8-9-12	**HAMMER TYPE:** Automatic	**EFFICIENCY:** 79%
DRILLING CONTRACTOR:	2R Drilling, Inc.	**HAMMER DROP:** 30 inches	**WEIGHT:** 140 lbs
LOGGED BY: AJA	**CHECKED BY:** BDD	**DRIVE SAMPLER DIAMETER (inches)**	**ID:** 2.4 **OD:** 3

Elevation (feet)	Depth (feet)	Sampler	Symbol	Blows per 6 Inches	SPT N60 Blows per Foot	Field Unc. Comp. Str. (tsf)	DESCRIPTION	Dry Density (pcf)	Moisture Content (%)	Liquid Limit (%)	Plasticity Index (%)	Percent Passing #200 Sieve	Other Tests [PID]
				9 11 10	18		SILTY SAND (SM): olive brown, moist, medium dense, fine SAND, trace coarse to fine GRAVEL, few clay nodules					41	
70	5			8 7 13	17	>4	brown LEAN CLAY (CL): brown, moist, hard, medium plasticity, trace iron oxide stains						
							Bottom of boring at 5.5 feet. Groundwater not encountered during drilling. Boring prepared for percolation test. Cuttings collected and taken offsite.						
65	10												
60	15												
55	20												
50	25												
45													

LOG OF BORING DYB12-06

Torrance Transit Center

Project No. 2013-031

PLATE

A7

Library: DYLIB.GLB; Template: DYLG; Prj ID: 2013-031.GPJ

BORING LOCATION:	See Figure 2	**ELEVATION AND DATUM (feet):**	75 MSL
LATITUDE:	33° 50' 32.0" N	**LONGITUDE:**	118° 19' 49.2" W
DRILLING EQUIPMENT:	CME-75	**DRILLING METHOD:**	Hollow Stem Auger
BORING DIAMETER (inches):	8	**BORING DEPTH (feet):**	6.5
DATE STARTED: 8-8-12	**COMPLETED:** 8-8-12	**HAMMER TYPE:** Automatic	**EFFICIENCY:** 79%
DRILLING CONTRACTOR:	2R Drilling, Inc.	**HAMMER DROP:** 30 inches	**WEIGHT:** 140 lbs
LOGGED BY: AJA	**CHECKED BY:** BDD	**DRIVE SAMPLER DIAMETER (inches)**	**ID:** 2.4 **OD:** 3

Elevation (feet)	Depth (feet)	Sampler	Symbol	Blows per 6 Inches	SPT N60 Blows per Foot	Field Unc. Comp. Str. (tsf)	DESCRIPTION	Dry Density (pcf)	Moisture Content (%)	Liquid Limit (%)	Plasticity Index (%)	Percent Passing #200 Sieve	Other Tests [PID]
							SILTY SAND with GRAVEL (SM): pale brown, moist, dense, fine SAND						
				29 31 28	50		light olive brown					33	PA
						>4	LEAN CLAY (CL): olive brown, moist, hard, medium plasticity						
70	5			14 17 24	36	>4							
							Bottom of boring at 6.5 feet. Groundwater not encountered during drilling. Boring backfilled with cement slurry. Cuttings collected and taken offsite.						
65	10												
60	15												
55	20												
50	25												
45													

LOG OF BORING DYB12-07

Torrance Transit Center

Project No. 2013-031

PLATE

A8

Library: DYLIB.GLB; Template: DYLG; Prj ID: 2013-031.GPJ

BORING LOCATION:	See Figure 2	**ELEVATION AND DATUM (feet):**	79 MSL
LATITUDE:	33° 50' 32.1" N	**LONGITUDE:**	118° 19' 46.2" W
DRILLING EQUIPMENT:	CME-75	**DRILLING METHOD:**	Hollow Stem Auger
BORING DIAMETER (inches):	8	**BORING DEPTH (feet):**	64.5
DATE STARTED: 8-9-12	**COMPLETED:** 8-9-12	**HAMMER TYPE:** Automatic	**EFFICIENCY:** 79%
DRILLING CONTRACTOR:	2R Drilling, Inc.	**HAMMER DROP:** 30 inches	**WEIGHT:** 140 lbs
LOGGED BY: AJA	**CHECKED BY:** BDD	**DRIVE SAMPLER DIAMETER (inches)**	**ID:** 2.4 **OD:** 3

Elevation (feet)	Depth (feet)	Sampler	Symbol	Blows per 6 Inches	SPT N60 Blows per Foot	Field Unc. Comp. Str. (tsf)	DESCRIPTION	Dry Density (pcf)	Moisture Content (%)	Liquid Limit (%)	Plasticity Index (%)	Percent Passing #200 Sieve	Other Tests [PID]
							SILTY SAND (SM): dark brown, moist, very dense, fine SAND, trace fine GRAVEL, iron oxide stains						
				25 33 50/6"	71								
75	5			6 7 10	14		medium dense, no GRAVEL, no iron oxide stains						[0]
							CLAYEY SAND (SC): strong brown, moist, medium dense, fine SAND, iron oxide stains						
70	10			25 20 21	36			118	14				
65	15			11 15 19	45		light olive brown, dense, no iron oxide stains, decrease clay content						
							SILTY SAND (SM): strong brown, moist, medium dense, fine SAND, pinhole porosity						
60	20			13 20 27	41							29	PA
							LEAN CLAY (CL): light olive brown, moist, very stiff, medium plasticity, trace iron oxide stains, trace mica						
55	25			7 11 14	33	3.5							
							SANDY LEAN CLAY (CL): strong brown, moist, very stiff, fine SAND, iron oxide stains						
50				25 50/6"	86		POORLY GRADED SAND with CLAY (SP-SC): strong brown, moist, very dense, very fine SAND					61 29	PA PA

LOG OF BORING DYB12-08

Torrance Transit Center

Project No. 2013-031

PLATE

A9

Library: DYLIB.GLB; Template: DYLG; Prj ID: 2013-031.GPJ

Elevation (feet)	Depth (feet)	Sampler	Symbol	Blows per 6 Inches	SPT N60 Blows per Foot	Field Unc. Comp. Str. (tsf)	DESCRIPTION	Dry Density (pcf)	Moisture Content (%)	Liquid Limit (%)	Plasticity Index (%)	Percent Passing #200 Sieve	Other Tests [PID]
45	35			13 18 21	51		brownish yellow, dense, trace mica						
40	40			15 13 50/4"	75		very dense, medium to fine SAND in tip of sampler						
							POORLY GRADED GRAVEL with SAND (GP): light olive brown, moist, very dense, fine SAND, coarse to fine GRAVEL						
35	45			25 50/4"	100								
							POORLY GRADED SAND with GRAVEL (SP): light olive brown, moist, very dense, fine SAND, coarse to fine GRAVEL, trace mica						
30	50			50/5"	100								
25	55			22 33 45	100		POORLY GRADED SAND (SP): light yellowish brown, moist, very dense, fine SAND, trace fine GRAVEL, micaceous						
20	60			23 50/4"	100							3	
15	65			19 20 36	74		medium to fine SAND						
							Bottom of boring at 64.5 feet. Groundwater not encountered during drilling. Boring backfilled with cement slurry. Soil cuttings drummed for temporary storage prior to disposal.						
10													

LOG OF BORING DYB12-08

Torrance Transit Center

Project No. 2013-031

PLATE

A10

Library: DYLIB.GLB; Template: DYLG; Prj ID: 2013-031.GPJ

BORING LOCATION:	See Figure 2	**ELEVATION AND DATUM (feet):**	75 MSL
LATITUDE:	33° 50' 30.8" N	**LONGITUDE:**	118° 19' 48.4" W
DRILLING EQUIPMENT:	CME-75	**DRILLING METHOD:**	Hollow Stem Auger
BORING DIAMETER (inches):	8	**BORING DEPTH (feet):**	5.5
DATE STARTED: 8-8-12	**COMPLETED:** 8-8-12	**HAMMER TYPE:** Automatic	**EFFICIENCY:** 79%
DRILLING CONTRACTOR:	2R Drilling, Inc.	**HAMMER DROP:** 30 inches	**WEIGHT:** 140 lbs
LOGGED BY: AJA	**CHECKED BY:** BDD	**DRIVE SAMPLER DIAMETER (inches)**	**ID:** 2.4 **OD:** 3

Elevation (feet)	Depth (feet)	Sampler	Symbol	Blows per 6 Inches	SPT N60 Blows per Foot	Field Unc. Comp. Str. (tsf)	DESCRIPTION	Dry Density (pcf)	Moisture Content (%)	Liquid Limit (%)	Plasticity Index (%)	Percent Passing #200 Sieve	Other Tests [PID]
				15 26 30	47	>4	LEAN CLAY with SAND (CL): light olive brown, moist, hard, medium plasticity, fine SAND	124	6				
70	5			14 17 21	33	>4	olive brown LEAN CLAY (CL): olive brown, moist, hard, medium plasticity, iron oxide stains Bottom of boring at 5.5 feet. Groundwater not encountered during drilling. Boring backfilled with cement slurry. Cuttings collected and taken offsite.						
65	10												
60	15												
55	20												
50	25												

LOG OF BORING DYB12-09

Torrance Transit Center

Project No. 2013-031

PLATE

A11

Library: DYLIB.GLB; Template: DYLG; Prj ID: 2013-031.GPJ

BORING LOCATION:	See Figure 2	**ELEVATION AND DATUM (feet):**	77 MSL
LATITUDE:	33° 50' 30.7" N	**LONGITUDE:**	118° 19' 47.7" W
DRILLING EQUIPMENT:	CME-75	**DRILLING METHOD:**	Hollow Stem Auger
BORING DIAMETER (inches):	8	**BORING DEPTH (feet):**	36.5
DATE STARTED: 8-8-12	**COMPLETED:** 8-8-12	**HAMMER TYPE:** Automatic	**EFFICIENCY:** 79%
DRILLING CONTRACTOR:	2R Drilling, Inc.	**HAMMER DROP:** 30 inches	**WEIGHT:** 140 lbs
LOGGED BY: AJA	**CHECKED BY:** BDD	**DRIVE SAMPLER DIAMETER (inches)**	**ID:** 2.4 **OD:** 3

Elevation (feet)	Depth (feet)	Sampler	Symbol	Blows per 6 Inches	SPT N60 Blows per Foot	Field Unc. Comp. Str. (tsf)	DESCRIPTION	Dry Density (pcf)	Moisture Content (%)	Liquid Limit (%)	Plasticity Index (%)	Percent Passing #200 Sieve	Other Tests [PID]
75				12 16 30	40		SILTY SAND (SM): light olive brown, moist, medium dense, fine SAND						
70	5			23 28 25	45		SILTY, CLAYEY SAND (SC-SM): olive brown, moist, dense, fine SAND, iron oxide stains						[0]
65	10			17 14 17	41								
60	15			11 17 18	30		SILTY SAND (SM): strong brown, moist, medium dense, fine SAND, iron oxide stains						
55	20			6 6 8	18	3	FAT CLAY with SAND (CH): olive brown, moist, very stiff, medium plasticity, fine SAND, iron oxide stains, pinhole porosity		25	52	35		[0]
50	25			14 18 30	41	>4	hard, increased iron oxide stains						
							SILTY SAND (SM): yellowish brown, moist, dense, fine SAND						

LOG OF BORING DYB12-10

Torrance Transit Center

Project No. 2013-031

PLATE

A12

Library: DYLIB.GLB; Template: DYLG; Prj ID: 2013-031.GPJ

Elevation (feet)	Depth (feet)	Sampler	Symbol	Blows per 6 Inches	SPT N60 Blows per Foot	Field Unc. Comp. Str. (tsf)	DESCRIPTION	Dry Density (pcf)	Moisture Content (%)	Liquid Limit (%)	Plasticity Index (%)	Percent Passing #200 Sieve	Other Tests [PID]
45				17 21 25	61							16	PA
							POORLY GRADED SAND (SP): pale brown, moist, very dense, medium to fine SAND						
	35			28 50/6"	86								
40							Bottom of boring at 36 feet. Groundwater not encountered during drilling. Boring backfilled with cement slurry. Soil cuttings drummed for temporary storage prior to disposal.						
	40												
35													
	45												
30													
	50												
25													
	55												
20													
	60												
15													
	65												
10													

LOG OF BORING DYB12-10

Torrance Transit Center

Project No. 2013-031

PLATE

A13

Library: DYLIB.GLB; Template: DYLG; Prj ID: 2013-031.GPJ

BORING LOCATION:	See Figure 2	**ELEVATION AND DATUM (feet):**	75 MSL
LATITUDE:	33° 50' 31.4" N	**LONGITUDE:**	118° 19' 44.7" W
DRILLING EQUIPMENT:	CME-75	**DRILLING METHOD:**	Hollow Stem Auger
BORING DIAMETER (inches):	8	**BORING DEPTH (feet):**	6.5
DATE STARTED: 8-8-12	**COMPLETED:** 8-8-12	**HAMMER TYPE:** Automatic	**EFFICIENCY:** 79%
DRILLING CONTRACTOR:	2R Drilling, Inc.	**HAMMER DROP:** 30 inches	**WEIGHT:** 140 lbs
LOGGED BY: AJA	**CHECKED BY:** BDD	**DRIVE SAMPLER DIAMETER (inches)**	**ID:** 2.4 **OD:** 3

Elevation (feet)	Depth (feet)	Sampler	Symbol	Blows per 6 Inches	SPT N60 Blows per Foot	Field Unc. Comp. Str. (tsf)	DESCRIPTION	Dry Density (pcf)	Moisture Content (%)	Liquid Limit (%)	Plasticity Index (%)	Percent Passing #200 Sieve	Other Tests [PID]
				21 50/6"	86		SILTY SAND (SM): dark yellowish brown, moist, very dense, fine SAND, trace fine GRAVEL, iron oxide stains						
				26 50/6"	86		increased iron oxide stains, few clay nodules						
70	5			7 8 10	24	>4	CLAYEY SAND (SC): olive brown, moist, medium dense, medium plasticity, fine SAND					40	PA
							LEAN CLAY (CL): olive brown, moist, hard, medium plasticity, iron oxide stains						
							Bottom of boring at 6.5 feet. Groundwater not encountered during drilling. Boring prepared for percolation test. Cuttings collected and taken offsite.						
65	10												
60	15												
55	20												
50	25												
45													

LOG OF BORING DYB12-11

Torrance Transit Center

Project No. 2013-031

PLATE

A14

Library: DYLIB.GLB; Template: DYLG; Prj ID: 2013-031.GPJ

BORING LOCATION:	See Figure 2	**ELEVATION AND DATUM (feet):**	78 MSL
LATITUDE:	33° 50' 30.2" N	**LONGITUDE:**	118° 19' 45.9" W
DRILLING EQUIPMENT:	CME-75	**DRILLING METHOD:**	Hollow Stem Auger
BORING DIAMETER (inches):	8	**BORING DEPTH (feet):**	36.5
DATE STARTED: 8-9-12	**COMPLETED:** 8-9-12	**HAMMER TYPE:** Automatic	**EFFICIENCY:** 79%
DRILLING CONTRACTOR:	2R Drilling, Inc.	**HAMMER DROP:** 30 inches	**WEIGHT:** 140 lbs
LOGGED BY: AJA	**CHECKED BY:** BDD	**DRIVE SAMPLER DIAMETER (inches)**	**ID:** 2.4 **OD:** 3

Elevation (feet)	Depth (feet)	Sampler	Symbol	Blows per 6 Inches	SPT N60 Blows per Foot	Field Unc. Comp. Str. (tsf)	DESCRIPTION	Dry Density (pcf)	Moisture Content (%)	Liquid Limit (%)	Plasticity Index (%)	Percent Passing #200 Sieve	Other Tests [PID]
				10 13 13	22		SANDY SILTY CLAY (CL-ML): dark brown, moist, very stiff, fine SAND, trace fine GRAVEL	120	8			51	PA
75				14 50/6"	86		dark yellowish brown, hard, decreased fines content						
	5			32 42 40	70		SILTY, CLAYEY SAND (SC-SM): brown, moist, very dense, fine SAND, iron oxide stains					36	
70							CLAYEY SAND (SC): strong brown, moist, dense, fine SAND						
	10			12 20 24	58								PA
65							SILTY SAND (SM): olive brown, moist, medium dense, fine SAND, trace clay						
	15			18 23 23	40							27	[0] PA
60													
	20			11 11 11	29		trace iron oxide stains						
55													
	25			11 19 31	42	3.5	FAT CLAY (CH): olive brown, moist, hard, medium plasticity, trace fine SAND, iron oxide stains, manganese oxide stains	79	27	56	37		[0]
50													

LOG OF BORING DYB12-12

Page 1 of 2

Torrance Transit Center

Project No. 2013-031

PLATE

A15

Library: DYLIB.GLB; Template: DYLG; Prj ID: 2013-031.GPJ

Elevation (feet)	Depth (feet)	Sampler	Symbol	Blows per 6 Inches	SPT N60 Blows per Foot	Field Unc. Comp. Str. (tsf)	DESCRIPTION	Dry Density (pcf)	Moisture Content (%)	Liquid Limit (%)	Plasticity Index (%)	Percent Passing #200 Sieve	Other Tests [PID]
				6 8 12	26	4.25	micaceous		28	57	36		
45													
	35			9 14 35	42	>4		77	28	58	39		
							POORLY GRADED SAND with CLAY (SP-SC): strong brown, moist, dense, fine SAND						
40							Bottom of boring at 36.5 feet. Groundwater not encountered during drilling. Boring backfilled with cement slurry. Soil cuttings drummed for temporary storage prior to disposal.						
	40												
35													
	45												
30													
	50												
25													
	55												
20													
	60												
15													
	65												
10													

LOG OF BORING DYB12-12

Torrance Transit Center

Project No. 2013-031

PLATE

A16

Library: DYLIB.GLB; Template: DYLG; Prj ID: 2013-031.GPJ

BORING LOCATION:	See Figure 2	**ELEVATION AND DATUM (feet):**	75 MSL
LATITUDE:	33° 50' 29.4" N	**LONGITUDE:**	118° 19' 46.2" W
DRILLING EQUIPMENT:	CME-75	**DRILLING METHOD:**	Hollow Stem Auger
BORING DIAMETER (inches):	8	**BORING DEPTH (feet):**	6.5
DATE STARTED: 8-8-12	**COMPLETED:** 8-8-12	**HAMMER TYPE:** Automatic	**EFFICIENCY:** 79%
DRILLING CONTRACTOR:	2R Drilling, Inc.	**HAMMER DROP:** 30 inches	**WEIGHT:** 140 lbs
LOGGED BY: AJA	**CHECKED BY:** BDD	**DRIVE SAMPLER DIAMETER (inches)**	**ID:** 2.4 **OD:** 3

Elevation (feet)	Depth (feet)	Sampler	Symbol	Blows per 6 Inches	SPT N60 Blows per Foot	Field Unc. Comp. Str. (tsf)	DESCRIPTION	Dry Density (pcf)	Moisture Content (%)	Liquid Limit (%)	Plasticity Index (%)	Percent Passing #200 Sieve	Other Tests [PID]
				36 43 36	67		SILTY SAND (SM): strong brown, moist, very dense, fine SAND, iron oxide stains						
70	5			18 40 50/5"	86		LEAN CLAY with SAND (CL): olive brown, moist, hard, medium plasticity, fine SAND						
							Bottom of boring at 6.5 feet. Groundwater not encountered during drilling. Boring backfilled with cement slurry. Cuttings collected and taken offsite.						
65	10												
60	15												
55	20												
50	25												

LOG OF BORING DYB12-13

Torrance Transit Center

Project No. 2013-031

PLATE

A17

Diaz Yourman and Assoc

Project	Torrance Transit Center	Operator	RA/JC	Filename	SDF(328).cpt
Job Number	2012-017	Cone Number	DSG0906	GPS	
Hole Number	DYC12-01	Date and Time	6/1/2012 8:50:46 AM	Maximum Depth	34.12 ft
Water Table Depth		>34.12 ft			

Net Area Ratio .8

CPT DATA

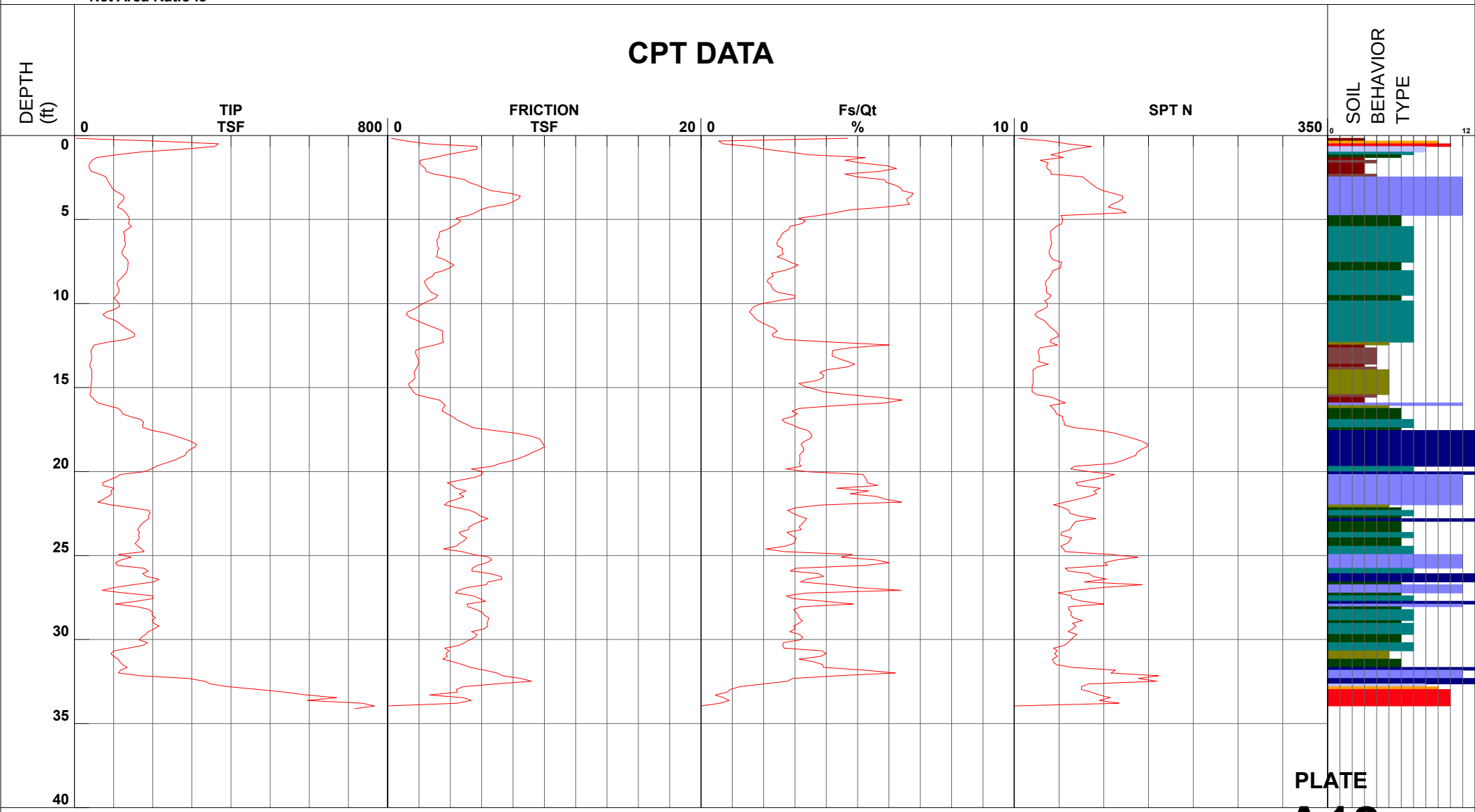

PLATE A18

- 1 - sensitive fine grained
- 2 - organic material
- 3 - clay
- 4 - silty clay to clay
- 5 - clayey silt to silty clay
- 6 - sandy silt to clayey silt
- 7 - silty sand to sandy silt
- 8 - sand to silty sand
- 9 - sand
- 10 - gravelly sand to sand
- 11 - very stiff fine grained (*)
- 12 - sand to clayey sand (*)

Cone Size 10cm squared

S*Soil behavior type and SPT based on data from UBC-1983

Diaz Yourman and Assoc

Project	Torrance Transit Center	Operator	RA/JC	Filename	SDF(329).cpt
Job Number	2012-017	Cone Number	DSG0906	GPS	
Hole Number	DYC12-02	Date and Time	6/1/2012 9:36:40 AM	Maximum Depth	38.55 ft
Water Table Depth	>38.55 ft				

Net Area Ratio .8

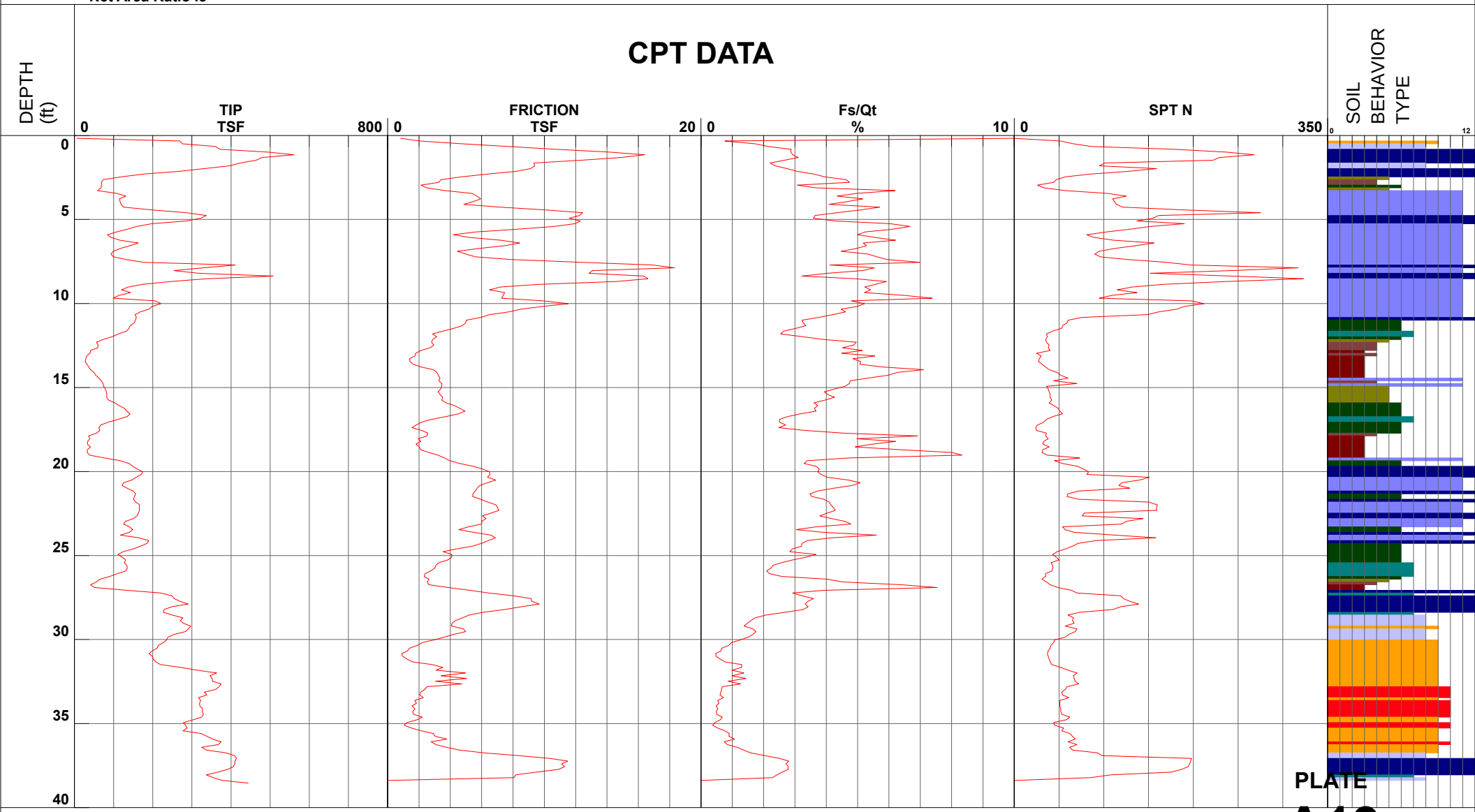

PLATE A19

1 - sensitive fine grained
2 - organic material
3 - clay
4 - silty clay to clay
5 - clayey silt to silty clay
6 - sandy silt to clayey silt
7 - silty sand to sandy silt
8 - sand to silty sand
9 - sand
10 - gravelly sand to sand
11 - very stiff fine grained (*)
12 - sand to clayey sand (*)

Cone Size 10cm squared

S*Soil behavior type and SPT based on data from UBC-1983

Diaz Yourman and Assoc

Project	Torrance Transit Center	Operator	RA/JC	Filename	SDF(330).cpt
Job Number	2012-017	Cone Number	DSG0906	GPS	
Hole Number	DYC12-03	Date and Time	6/1/2012 10:35:54 AM	Maximum Depth	35.10 ft
Water Table Depth		>35.10 ft			

Net Area Ratio .8

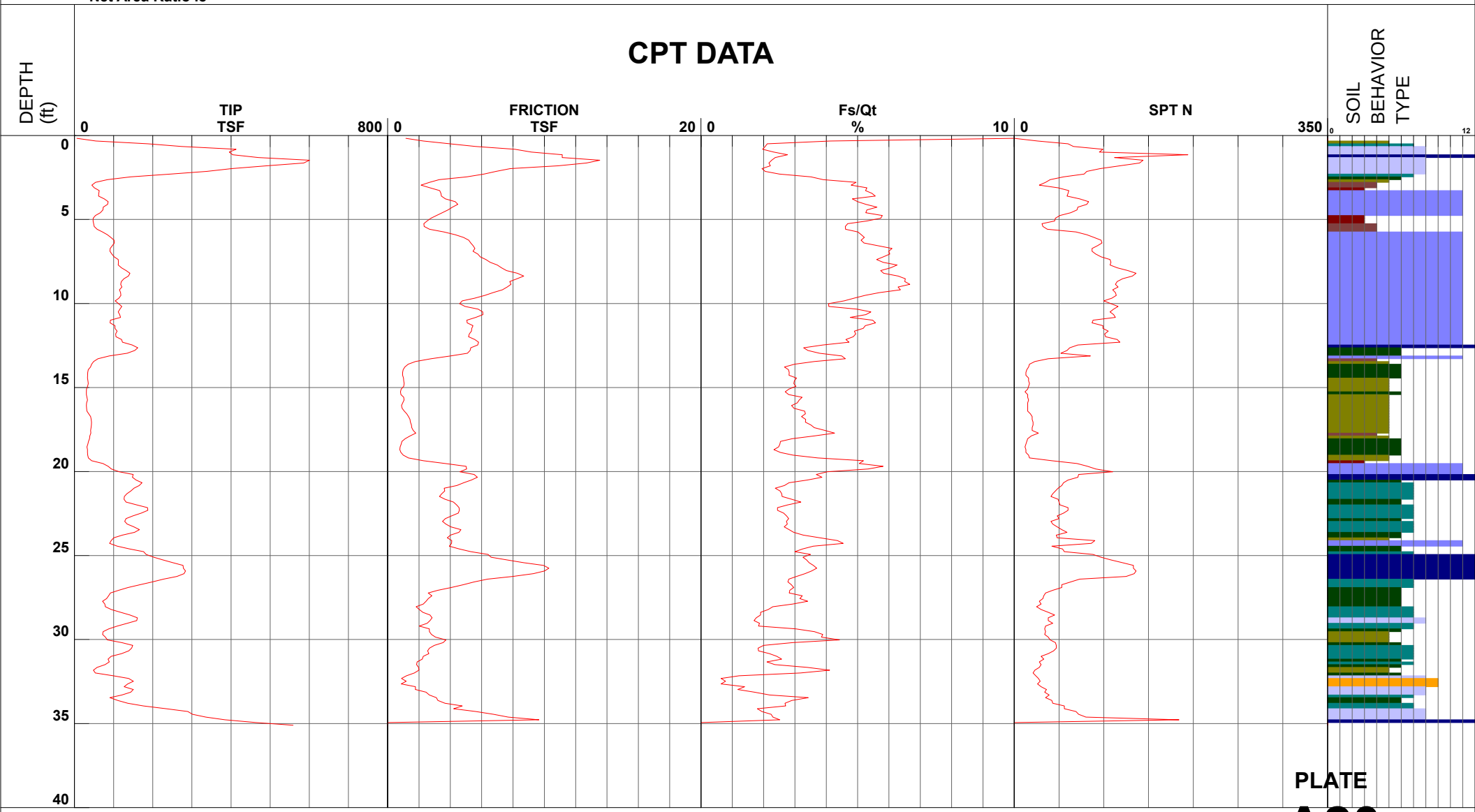

PLATE

A20

1 - sensitive fine grained
2 - organic material
3 - clay
4 - silty clay to clay
5 - clayey silt to silty clay
6 - sandy silt to clayey silt
7 - silty sand to sandy silt
8 - sand to silty sand
9 - sand
10 - gravelly sand to sand
11 - very stiff fine grained (*)
12 - sand to clayey sand (*)

Cone Size 10cm squared

S*Soil behavior type and SPT based on data from UBC-1983

Diaz Yourman and Assoc

Project	Torrance Transit Center	Operator	RA/JC	Filename	SDF(331).cpt
Job Number	2012-017	Cone Number	DSG0906	GPS	
Hole Number	DYC12-04	Date and Time	6/1/2012 11:12:10 AM	Maximum Depth	35.10 ft
Water Table Depth	>35.10 ft				

Net Area Ratio .8

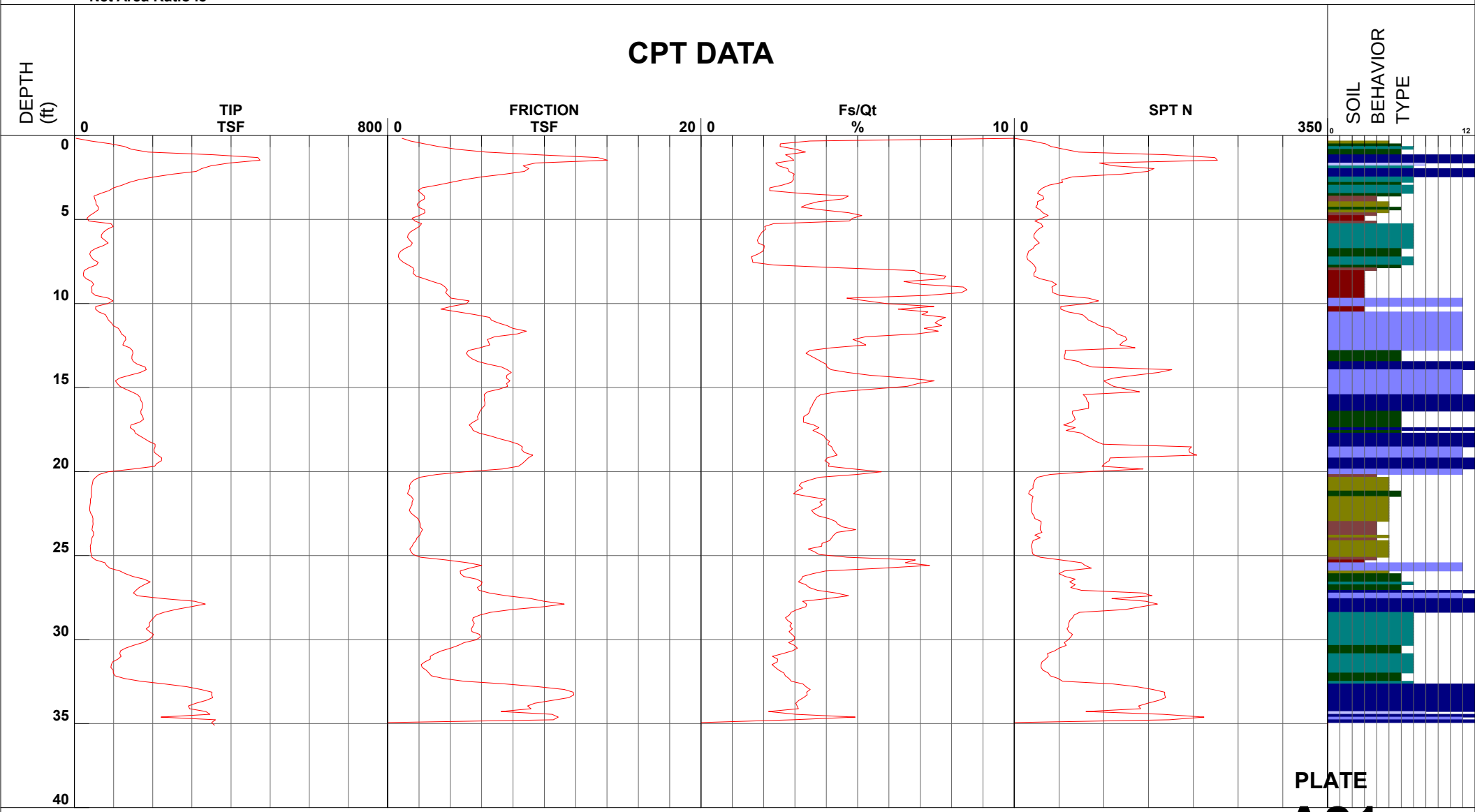

PLATE A21

1 - sensitive fine grained
2 - organic material
3 - clay
4 - silty clay to clay
5 - clayey silt to silty clay
6 - sandy silt to clayey silt
7 - silty sand to sandy silt
8 - sand to silty sand
9 - sand
10 - gravelly sand to sand
11 - very stiff fine grained (*)
12 - sand to clayey sand (*)

Cone Size 10cm squared

S*Soil behavior type and SPT based on data from UBC-1983

Diaz Yourman and Assoc

Project	Torrance Transit Center	Operator	RA/JC	Filename	SDF(332).cpt
Job Number	2012-017	Cone Number	DSG0906	GPS	
Hole Number	DYC12-05	Date and Time	6/1/2012 11:52:30 AM	Maximum Depth	37.07 ft
Water Table Depth	>37.07 ft				

Net Area Ratio .8

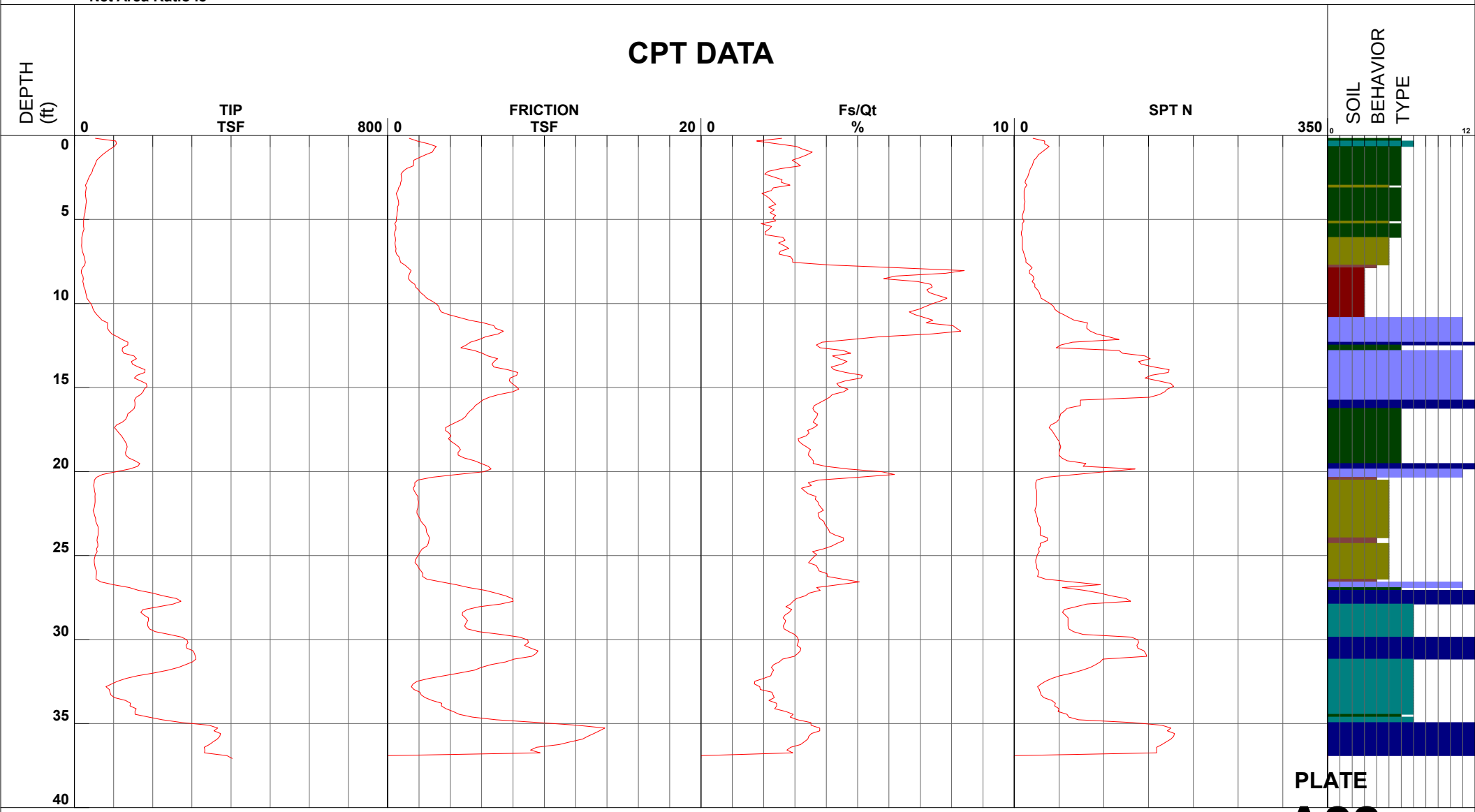

PLATE A22

1 - sensitive fine grained
2 - organic material
3 - clay
4 - silty clay to clay
5 - clayey silt to silty clay
6 - sandy silt to clayey silt
7 - silty sand to sandy silt
8 - sand to silty sand
9 - sand
10 - gravelly sand to sand
11 - very stiff fine grained (*)
12 - sand to clayey sand (*)

Cone Size 10cm squared

S*Soil behavior type and SPT based on data from UBC-1983

Diaz Yourman and Assoc

Project	Torrance Transit Center	Operator	RA/JC	Filename	SDF(335).cpt
Job Number	2012-017	Cone Number	DSG0906	GPS	
Hole Number	DYC12-06	Date and Time	6/1/2012 2:28:10 PM	Maximum Depth	33.63 ft
Water Table Depth	>33.63 ft				

Net Area Ratio .8

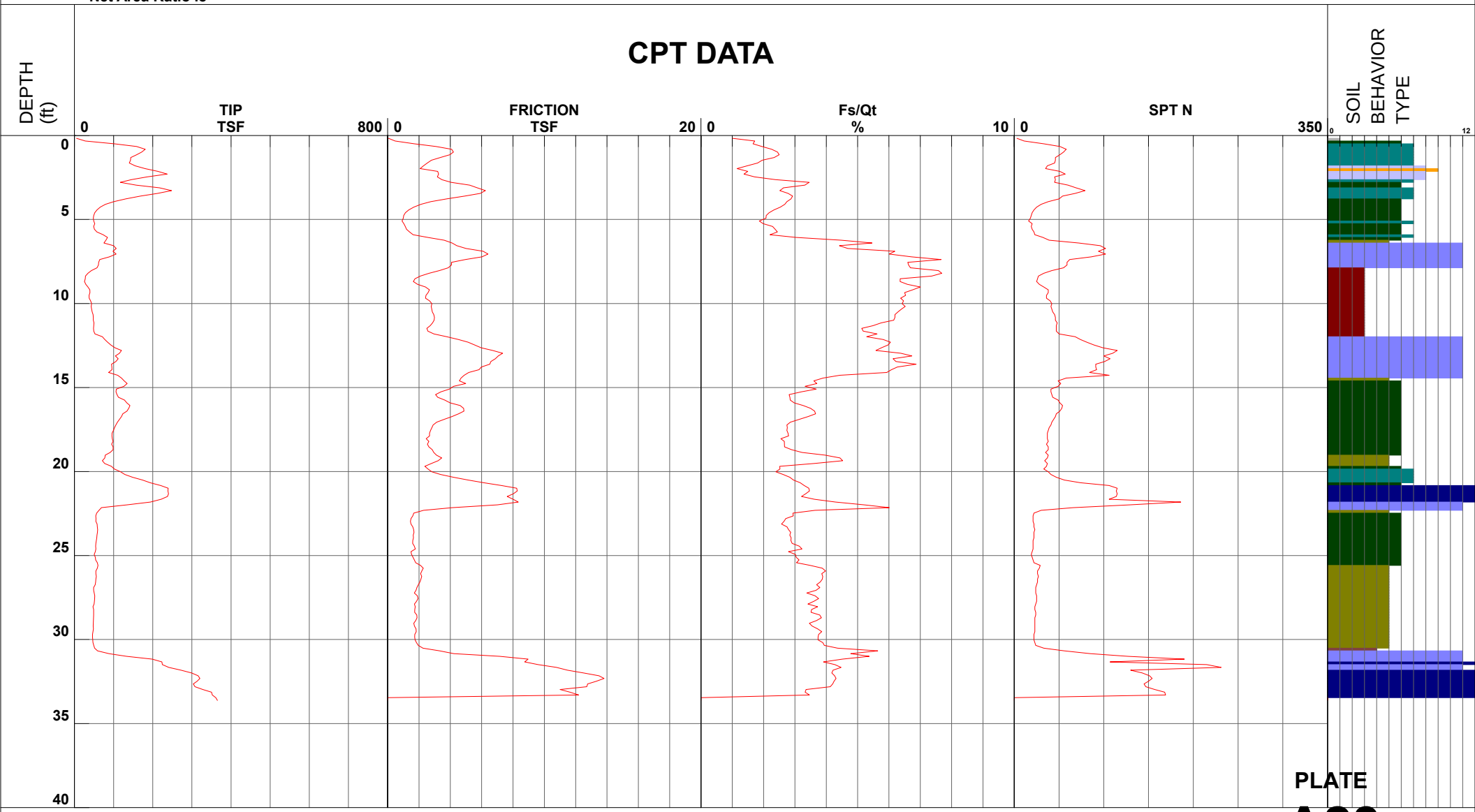

PLATE A23

1 - sensitive fine grained
2 - organic material
3 - clay
4 - silty clay to clay
5 - clayey silt to silty clay
6 - sandy silt to clayey silt
7 - silty sand to sandy silt
8 - sand to silty sand
9 - sand
10 - gravelly sand to sand
11 - very stiff fine grained (*)
12 - sand to clayey sand (*)

Cone Size 10cm squared

S*Soil behavior type and SPT based on data from UBC-1983

Diaz Yourman and Assoc

Project	Torrance Transit Center	Operator	RA/JC	Filename	SDF(333).cpt
Job Number	2012-017	Cone Number	DSG0906	GPS	
Hole Number	DYC12-07	Date and Time	6/1/2012 1:19:13 PM	Maximum Depth	37.40 ft
Water Table Depth	>37.40 ft				

Net Area Ratio .8

CPT DATA

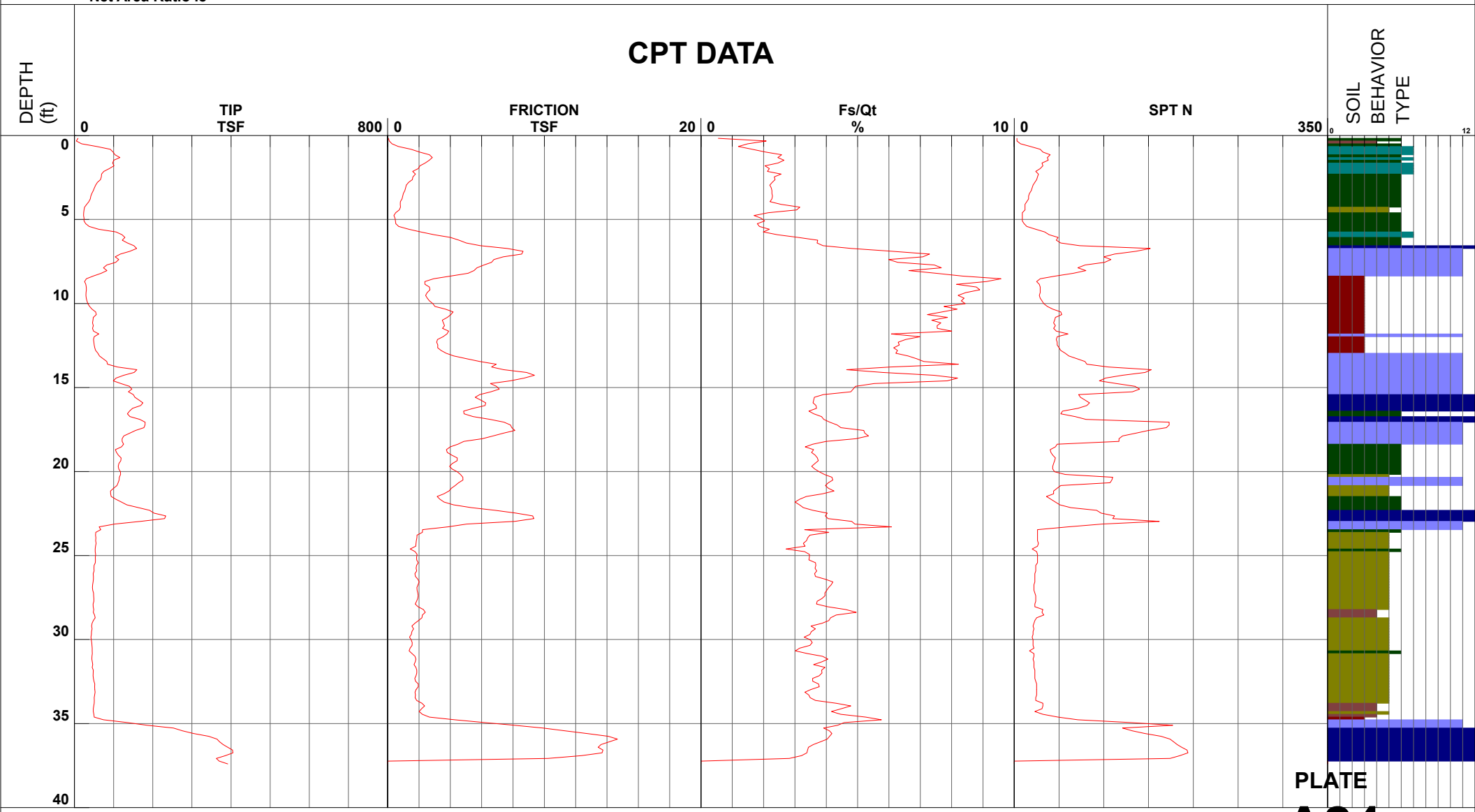

PLATE A24

1 - sensitive fine grained
2 - organic material
3 - clay
4 - silty clay to clay
5 - clayey silt to silty clay
6 - sandy silt to clayey silt
7 - silty sand to sandy silt
8 - sand to silty sand
9 - sand
10 - gravelly sand to sand
11 - very stiff fine grained (*)
12 - sand to clayey sand (*)

Cone Size 10cm squared

S*Soil behavior type and SPT based on data from UBC-1983

Diaz Yourman and Assoc

Project	Torrance Transit Center	Operator	RA/JC	Filename	SDF(334).cpt
Job Number	2012-017	Cone Number	DSG0906	GPS	
Hole Number	DYC12-08	Date and Time	6/1/2012 1:49:33 PM	Maximum Depth	35.27 ft
Water Table Depth	>35.27 ft				

Net Area Ratio .8

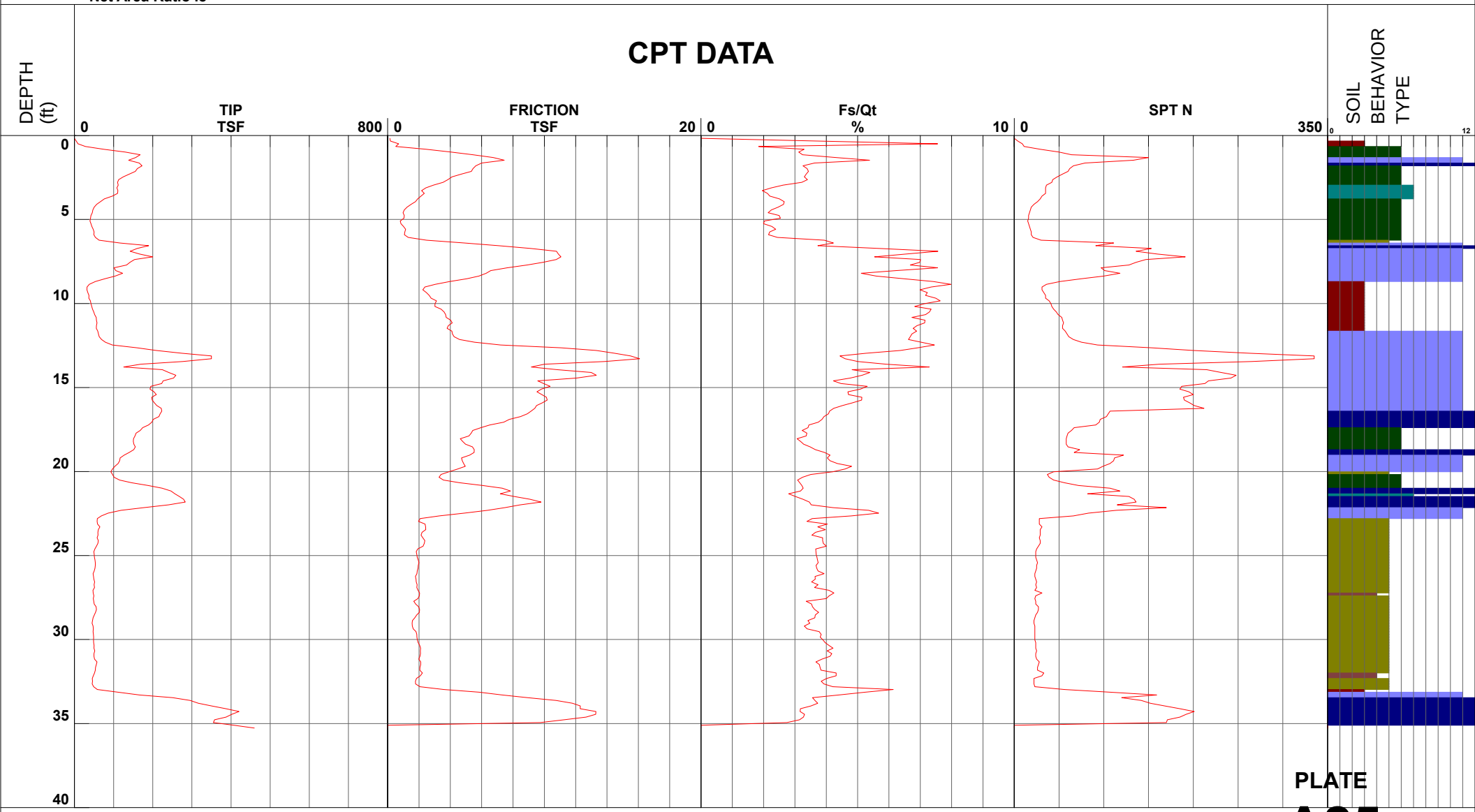

PLATE A25

1 - sensitive fine grained
2 - organic material
3 - clay
4 - silty clay to clay
5 - clayey silt to silty clay
6 - sandy silt to clayey silt
7 - silty sand to sandy silt
8 - sand to silty sand
9 - sand
10 - gravelly sand to sand
11 - very stiff fine grained (*)
12 - sand to clayey sand (*)

Cone Size 10cm squared

S*Soil behavior type and SPT based on data from UBC-1983

Diaz Yourman and Assoc

Project	Torrance Transit Center	Operator	RA/JC	Filename	SDF(336).cpt
Job Number	2012-017	Cone Number	DSG0906	GPS	
Hole Number	DYC12-09	Date and Time	6/1/2012 3:01:11 PM	Maximum Depth	35.27 ft
Water Table Depth	>35.27 ft				

Net Area Ratio .8

CPT DATA

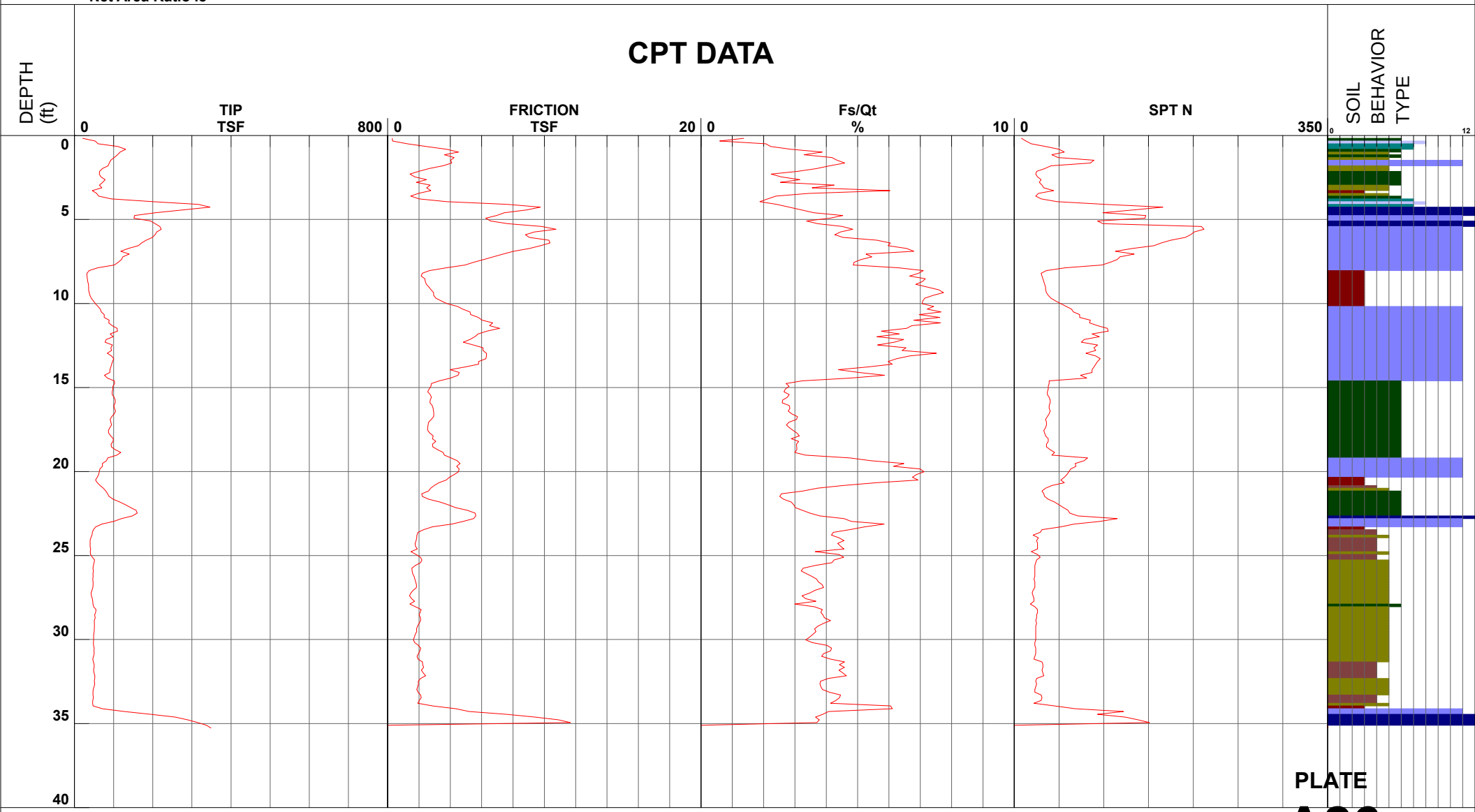

PLATE A26

- 1 - sensitive fine grained
- 2 - organic material
- 3 - clay
- 4 - silty clay to clay
- 5 - clayey silt to silty clay
- 6 - sandy silt to clayey silt
- 7 - silty sand to sandy silt
- 8 - sand to silty sand
- 9 - sand
- 10 - gravelly sand to sand
- 11 - very stiff fine grained (*)
- 12 - sand to clayey sand (*)

Cone Size 10cm squared

S*Soil behavior type and SPT based on data from UBC-1983

DIAZ•YOURMAN & ASSOCIATES
Geotechnical Services

PROJECT NO.	2012-017
DATE	8/15/2012
FIELD DATA BY	AJA
COMPUTED BY	MD
CHECKED BY	JMS

PROJECT: Torrance Transit Center

SUBJECT: Hydraulic Conductivity

LOCATION: DYB12-01 DATE OF TEST: 8/10/2012

Purpose: Calculate coefficient of permeability in accordance with USBR methods.

Reference: US Bureau of Reclamation, Procedure 7300-89 for Performing Field Permeability Testing by the Well Permeater Method

Height of water in well, h	60	inches
Depth to bottom of well	5	feet
Radius of well, r	4	inches
Discharge rate of water from the well for steady-state condition, q	6.13	gallons per hour
Water temperature, T	72	deg. F

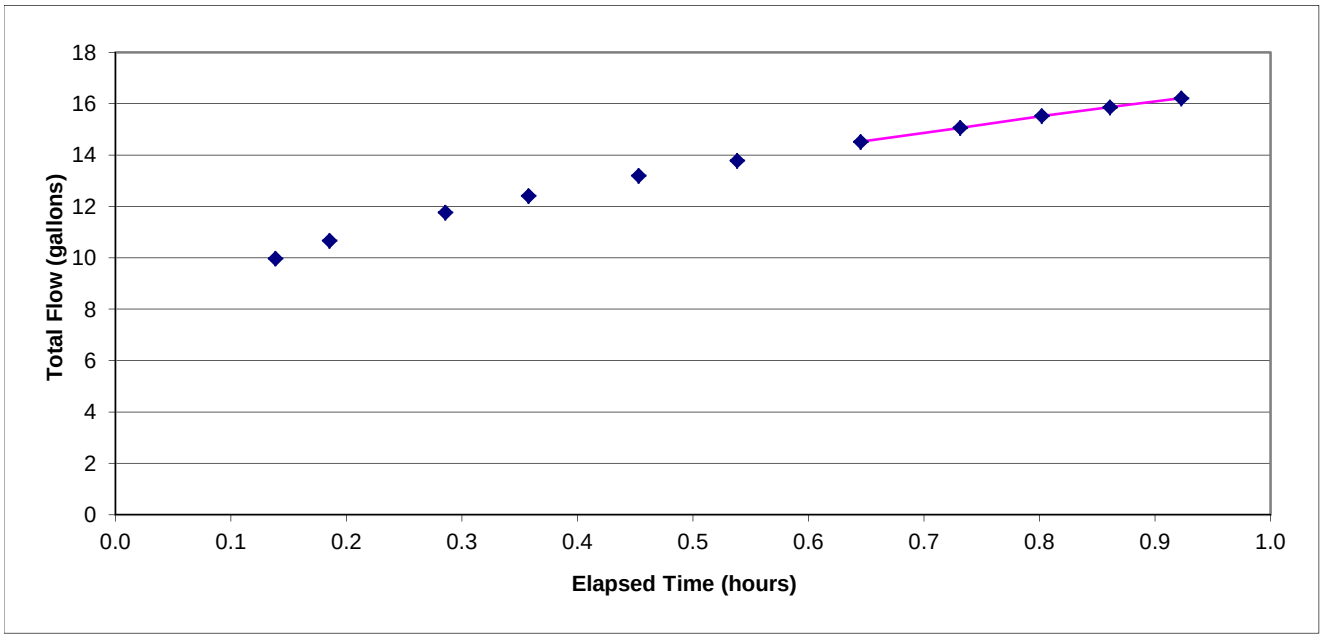

Note: Line shows data considered to have achieved 'steady state' flow.

Kinematic viscosity ratio of water, V	0.95	
Coefficient of permeability at 20 C, k20	0.15	inches per hour

PLATE
A27

K:\datafls\PROJECTS\2012\2012-017\Calcs\infiltration\percolation rate DYB12-01

DIAZ•YOURMAN & ASSOCIATES
Geotechnical Services

PROJECT NO.	2012-017
DATE	8/15/2012
FIELD DATA BY	AJA
COMPUTED BY	MD
CHECKED BY	JMS

PROJECT: Torrance Transit Center

SUBJECT: Hydraulic Conductivity

LOCATION: DYB12-02 DATE OF TEST: 8/10/2012

Purpose: Calculate coefficient of permeability in accordance with USBR methods.

Reference: US Bureau of Reclamation, Procedure 7300-89 for Performing Field Permeability Testing by the Well Permeater Method

Height of water in well, h	60	inches
Depth to bottom of well	5	feet
Radius of well, r	4	inches
Discharge rate of water from the well for steady-state condition, q	3.47	gallons per hour
Water temperature, T	69	deg. F

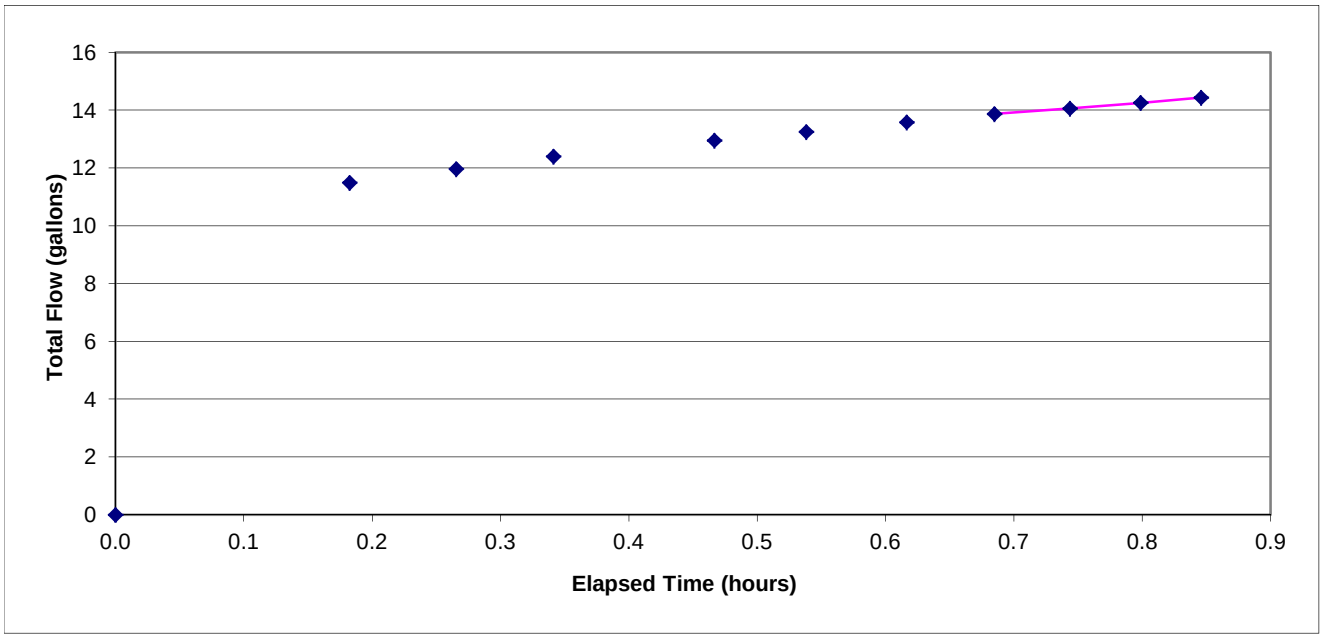

Note: Line shows data considered to have achieved 'steady state' flow.

Kinematic viscosity ratio of water, V	0.99	
Coefficient of permeability at 20 C, k20	0.09	inches per hour

PLATE
A28

K:\datafls\PROJECTS\2012\2012-017\Calcs\infiltration\percolation rate DYB12-02

PROJECT NO.	2012-017
DATE	8/15/2012
FIELD DATA BY	AJA
COMPUTED BY	MD
CHECKED BY	JMS

PROJECT: Torrance Transit Center

SUBJECT: Hydraulic Conductivity

LOCATION: DYB12-04 DATE OF TEST: 8/10/2012

Purpose: Calculate coefficient of permeability in accordance with USBR methods.

Reference: US Bureau of Reclamation, Procedure 7300-89 for Performing Field Permeability Testing by the Well Permeater Method

Height of water in well, h	60	inches
Depth to bottom of well	5	feet
Radius of well, r	4	inches
Discharge rate of water from the well for steady-state condition, q	4.36	gallons per hour
Water temperature, T	69	deg. F

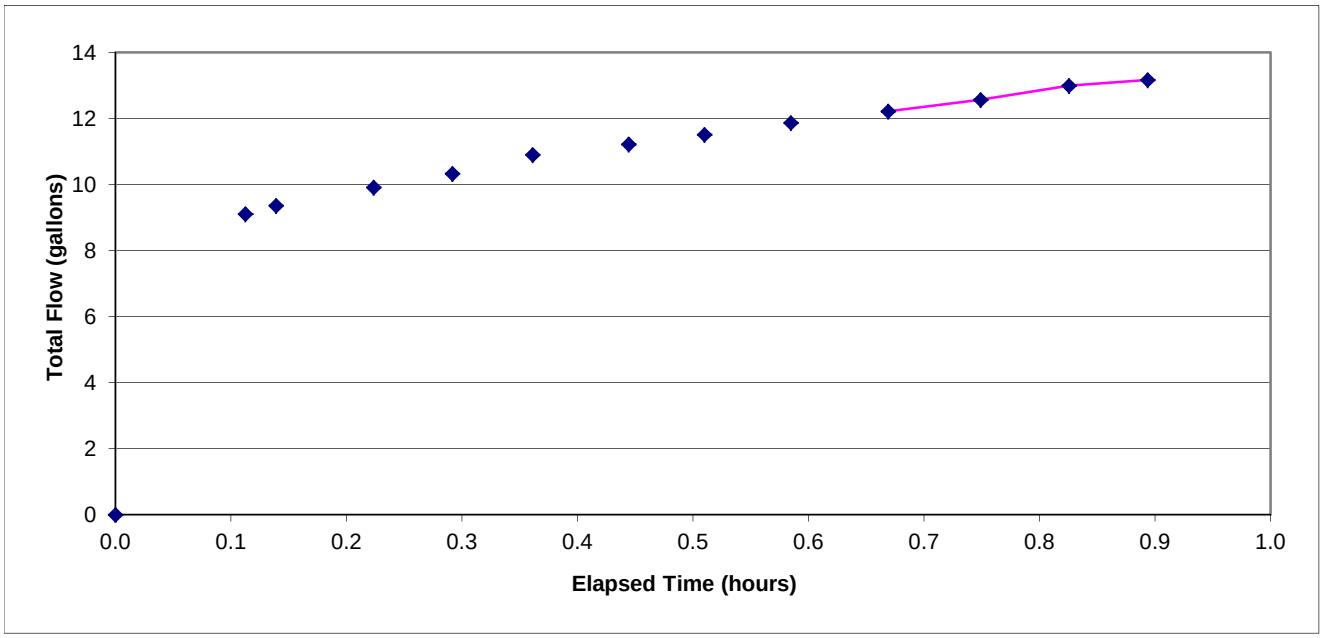

Note: Line shows data considered to have achieved 'steady state' flow.

Kinematic viscosity ratio of water, V	0.99	
Coefficient of permeability at 20 C, k20	0.11	inches per hour

PLATE

A29

K:\datafls\PROJECTS\2012\2012-017\Calcs\infiltration\percolation rate DYB12-04

DIAZ•YOURMAN & ASSOCIATES
Geotechnical Services

PROJECT NO.	2012-017
DATE	8/15/2012
FIELD DATA BY	AJA
COMPUTED BY	MD
CHECKED BY	JMS

PROJECT: Torrance Transit Center

SUBJECT: Hydraulic Conductivity

LOCATION: DYB12-06 DATE OF TEST: 8/13/2012

Purpose: Calculate coefficient of permeability in accordance with USBR methods.

Reference: US Bureau of Reclamation, Procedure 7300-89 for Performing Field Permeability Testing by the Well Permeater Method

Height of water in well, h	60	inches
Depth to bottom of well	5	feet
Radius of well, r	4	inches
Discharge rate of water from the well for steady-state condition, q	7.02	gallons per hour
Water temperature, T	70	deg. F

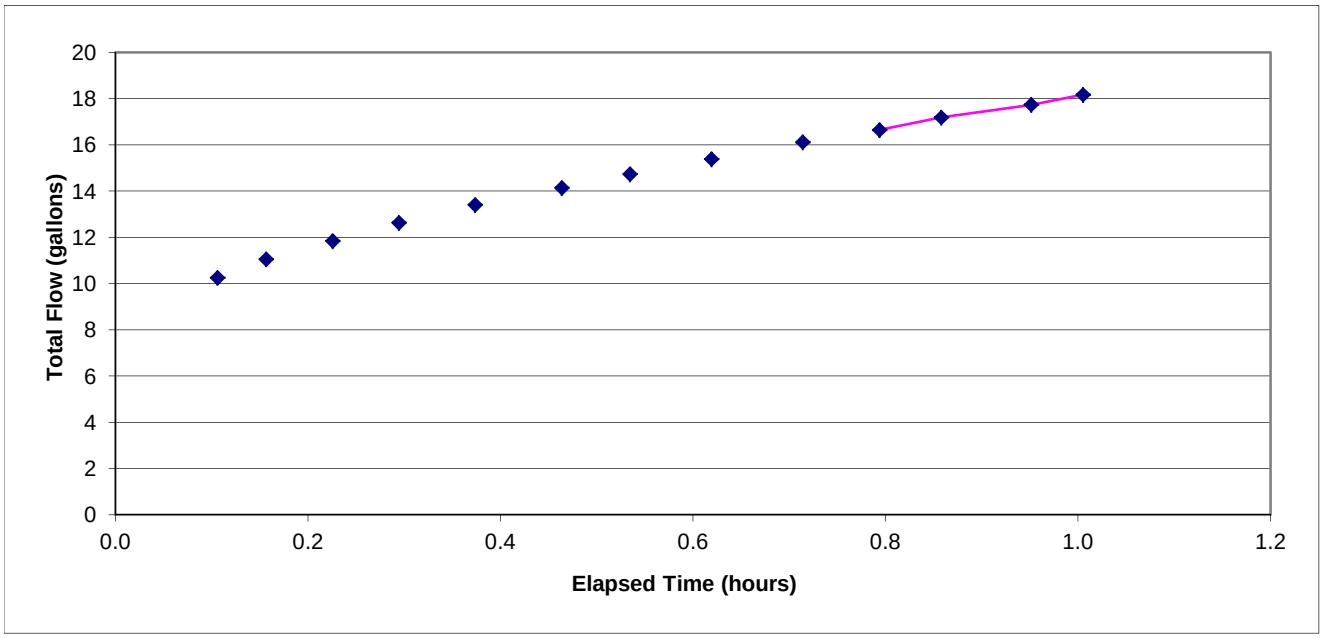

Note: Line shows data considered to have achieved 'steady state' flow.

Kinematic viscosity ratio of water, V	0.97	
Coefficient of permeability at 20 C, k20	0.17	inches per hour

PLATE
A30

K:\datafls\PROJECTS\2012\2012-017\Calcs\infiltration\percolation rate DYB12-06

DIAZ•YOURMAN & ASSOCIATES
Geotechnical Services

PROJECT NO.	2012-017
DATE	8/15/2012
FIELD DATA BY	AJA
COMPUTED BY	MD
CHECKED BY	JMS

PROJECT: Torrance Transit Center

SUBJECT: Hydraulic Conductivity

LOCATION: DYB12-11 DATE OF TEST: 8/10/2012

Purpose: Calculate coefficient of permeability in accordance with USBR methods.

Reference: US Bureau of Reclamation, Procedure 7300-89 for Performing Field Permeability Testing by the Well Permeater Method

Height of water in well, h	60	inches
Depth to bottom of well	5	feet
Radius of well, r	4	inches
Discharge rate of water from the well for steady-state condition, q	2.94	gallons per hour
Water temperature, T	69	deg. F

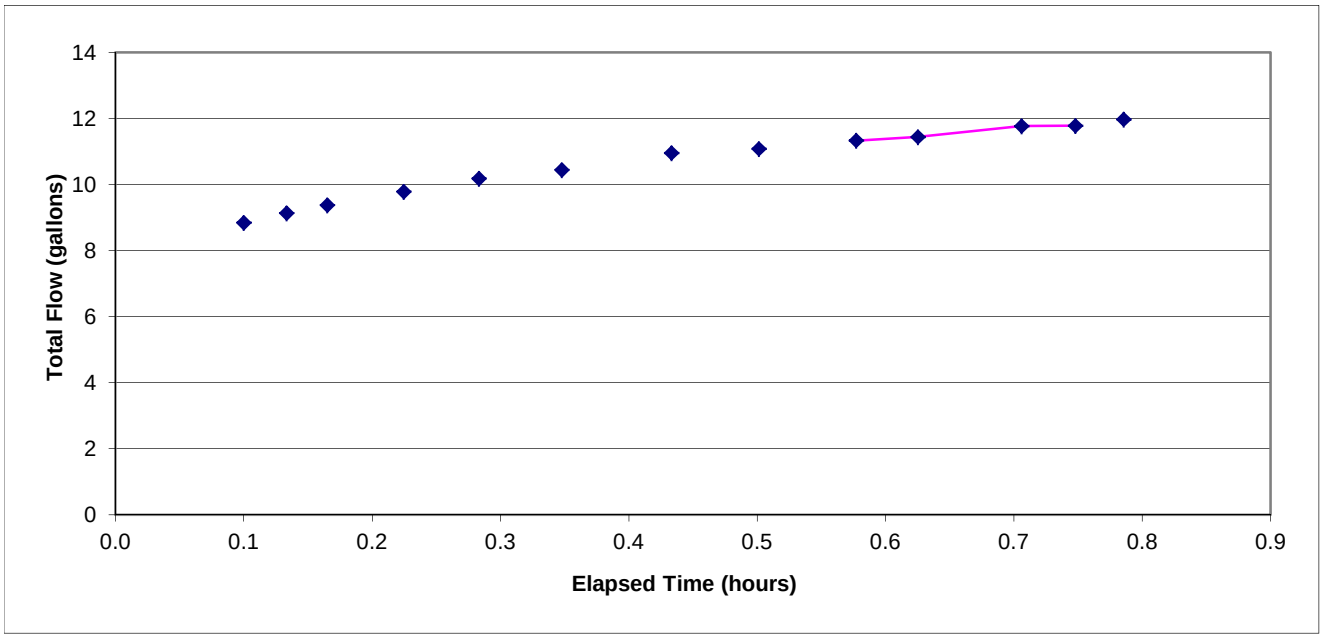

Note: Line shows data considered to have achieved 'steady state' flow.

Kinematic viscosity ratio of water, V	0.99	
Coefficient of permeability at 20 C, k20	0.07	inches per hour

PLATE
A31

K:\datafls\PROJECTS\2012\2012-017\Calcs\infiltration\percolation rate DYB12-11

APPENDIX B
LABORATORY TESTING

APPENDIX B- LABORATORY TESTING

Diaz•Yourman & Associates (DYA) selected soil samples to be tested and the tests to be performed on the selected samples. Laboratory testing was performed by AP Engineering and Testing. Laboratory data are summarized on the boring logs in Appendix A and presented on Plates B1 through B3. At the time of this draft, additional laboratory testing is still in progress. A summary of the geotechnical laboratory testing is presented in Table B1.

Table B1 - LABORATORY TESTING SUMMARY

TEST NAME	PROCEDURE	PURPOSE	LOCATION
Percent Passing the No. 200 Sieve	ASTM D1140	Classification, index properties	Boring Logs
Moisture Content, Dry Density	ASTM D2216	Classification, index properties	Boring Logs
Grain-Size Distribution	ASTM D422	Classification, index properties	Plates B1 through B2
Atterberg Limits	ASTM D4318	Expansion potential, classification, index properties	Plate B3
Consolidation	ASTM D2435	Settlement	Plates B4 through B6
Direct Shear	ASTM D3080	Shear strength	Plates B7 through B8
Expansion Index	UBC 29-2 ASTM D4829	Expansion potential	Plate B9
Sand Equivalency	ASTM D2419 - 09	Earthwork	Plates B10 through B11
Resistance (R-) Value	ASTM D2844 CTM 301	Pavement thickness design	Plates B12 through B14
pH	CTM 532	Corrosion potential	Table B2 and Plates B15 through B16
Resistivity	CTM 532	Corrosion potential	Table B2 and Plates B15 through B16
Soluble Sulfates	CTM 417-B	Corrosion potential	Table B2 and Plates B15 through B16
Soluble Chlorides	CTM 422	Corrosion potential	Table B2 and Plates B15 through B16

Notes:
- ASTM = ASTM International
- CTM = Caltrans Test Method
- UBC = Uniform Building Code

Table B2 - CORROSION POTENTIAL TEST RESULTS

Boring No.	DYB12-08	DYB12-10
Depth (feet)	0-5	2
pH	7.3	7.6
Water Soluble Sulfate Content (ppm)	232	88
Water Soluble Chloride Content (ppm)	35	54
Minimum Resistivity/Moisture Content (ohms-cm / %)	2275	4636

Template: DY_SIEVE_WIN

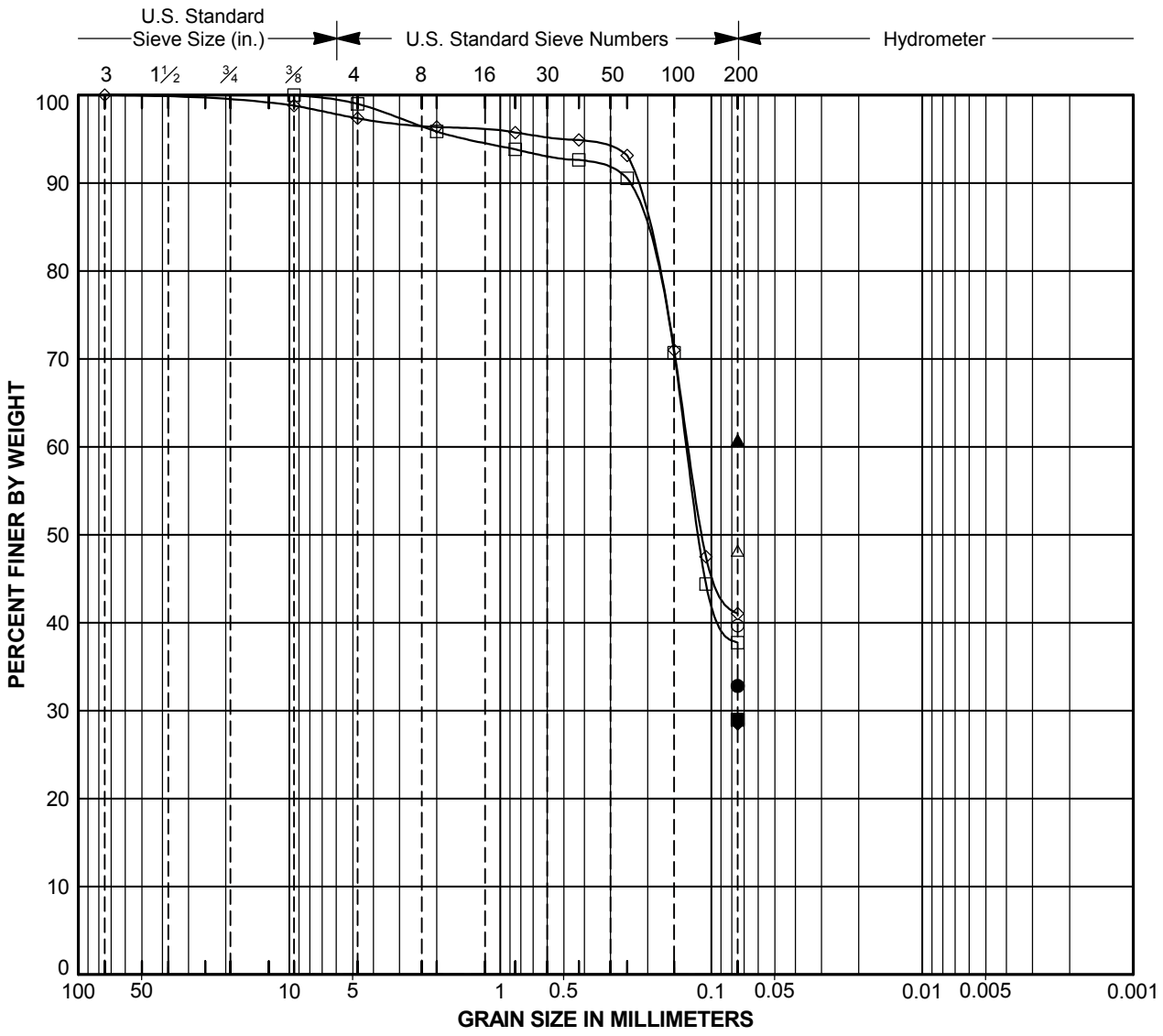

COBBLES	Coarse	Fine	Coarse	Medium	Fine	SILT or CLAY
	GRAVEL		SAND			

Laboratory Testing by:

Symbol	Source	Depth (feet)	Classification	Natural M. C. (%)	Liquid Limit (%)	Plasticity Index (%)	% Passing #200 Sieve
⊙	DYB12-04	1.5	CLAYEY SAND (SC)				40
□	DYB12-04	5.0	CLAYEY SAND (SC)				38
△	DYB12-05	3.0	CLAYEY SAND (SC)	9	22	11	48
◇	DYB12-06	1.0	SILTY SAND (SM)				41
●	DYB12-07	2.0	SILTY SAND WITH GRAVEL (SM)				33
■	DYB12-08	18.0	SILTY SAND (SM)				29
▲	DYB12-08	28.0	SANDY LEAN CLAY (CL)				61
◆	DYB12-08	28.5	POORLY GRADED SAND WITH CLAY (SP-SC)				29

PARTICLE SIZE ANALYSIS

Torrance Transit Center
Project No. 2013-031

PLATE
B1

Template: DY_SIEVE_WIN

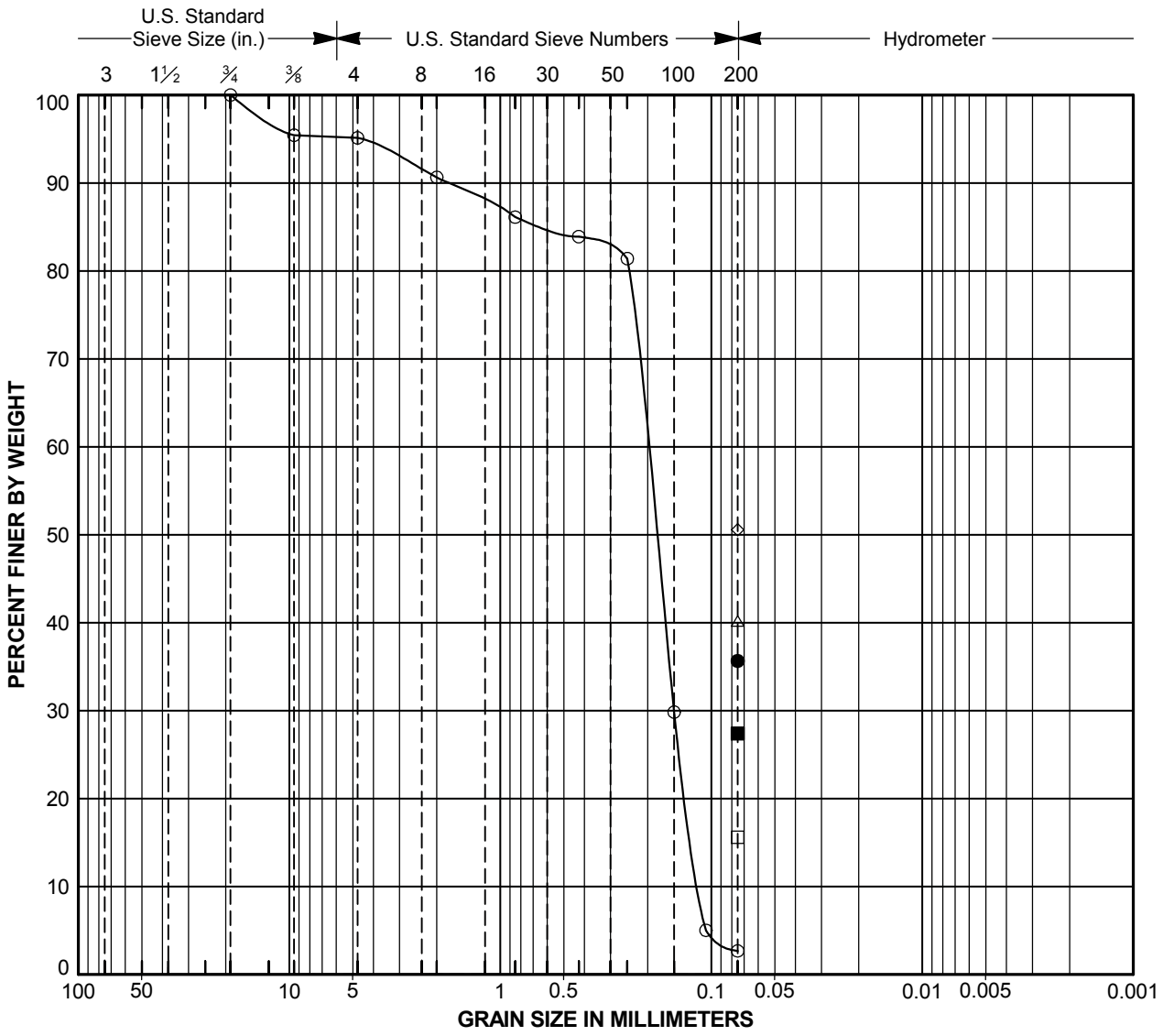

COBBLES	Coarse	Fine	Coarse	Medium	Fine	SILT or CLAY
	GRAVEL		SAND			

Laboratory Testing by:

Symbol	Source	Depth (feet)	Classification	Natural M. C. (%)	Liquid Limit (%)	Plasticity Index (%)	% Passing #200 Sieve
⊙	DYB12-08	58.0	POORLY GRADED SAND (SP)				3
□	DYB12-10	30.0	SILTY SAND (SM)				16
△	DYB12-11	5.0	CLAYEY SAND (SC)				40
◇	DYB12-12	1.0	SANDY SILTY CLAY (CL-ML)	8			51
●	DYB12-12	6.0	SILTY CLAYEY SAND (SC-SM)				36
■	DYB12-12	16.0	SILTY SAND (SM)				27

PARTICLE SIZE ANALYSIS

Torrance Transit Center
Project No. 2013-031

PLATE
B2

Template: DY_ATTERBERG_CHART_WIN

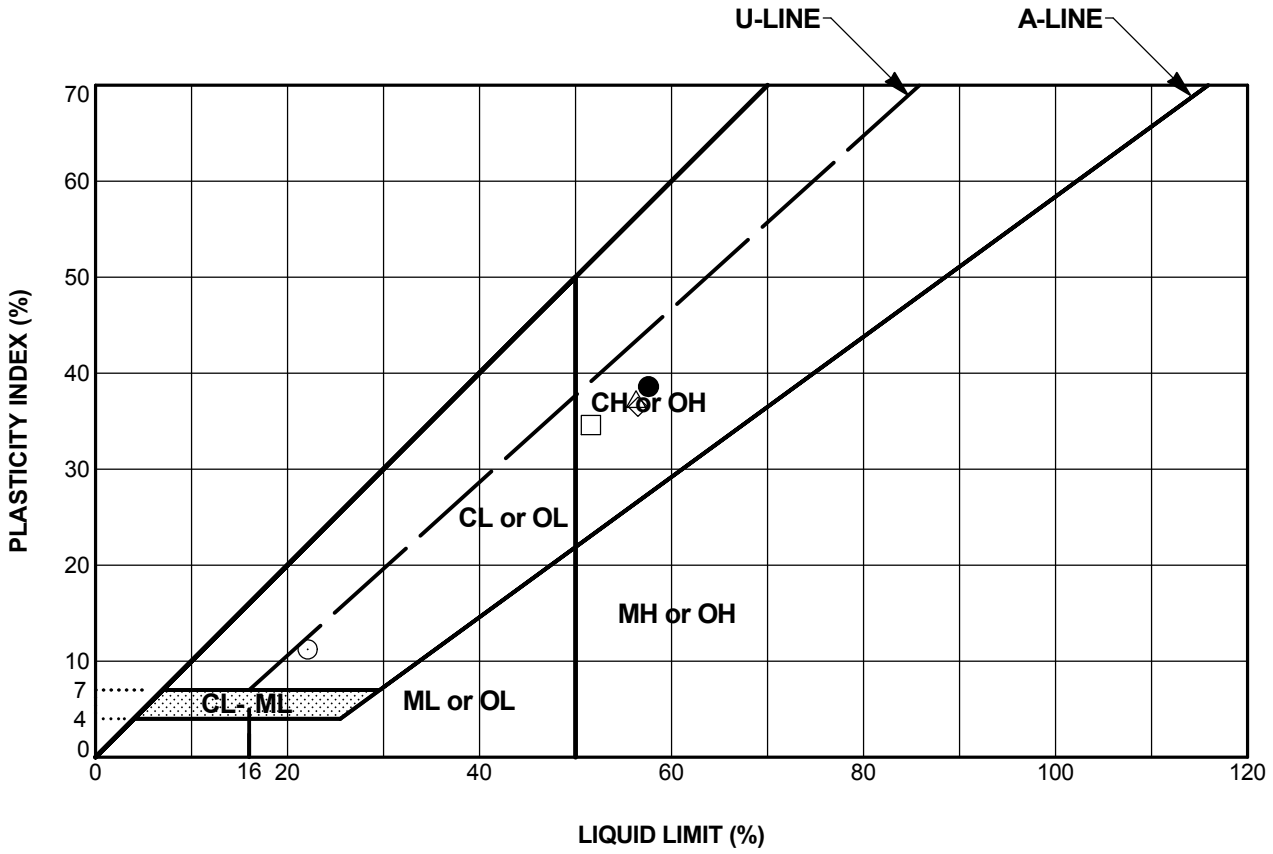

Laboratory Testing by:

Test Method: ASTM D4318

Symbol	Source	Depth (feet)	Classification	Natural M. C. (%)	Liquid Limit (%)	Plastic Limit (%)	Plasticity Index (%)	% Passing #200 Sieve
⊙	DYB12-05	3.0	CLAYEY SAND (SC)	9	22	11	11	48
□	DYB12-10	20.5	FAT CLAY WITH SAND (CH)	25	52	17	35	
△	DYB12-12	26.0	FAT CLAY (CH)	27	56	19	37	
◇	DYB12-12	31.0	FAT CLAY (CH)	28	57	20	36	
●	DYB12-12	35.0	FAT CLAY (CH)	28	58	19	39	

PLASTICITY CHART

Torrance Transit Center

Project No. 2013-031

PLATE

B3

AP Engineering & Testing, Inc.

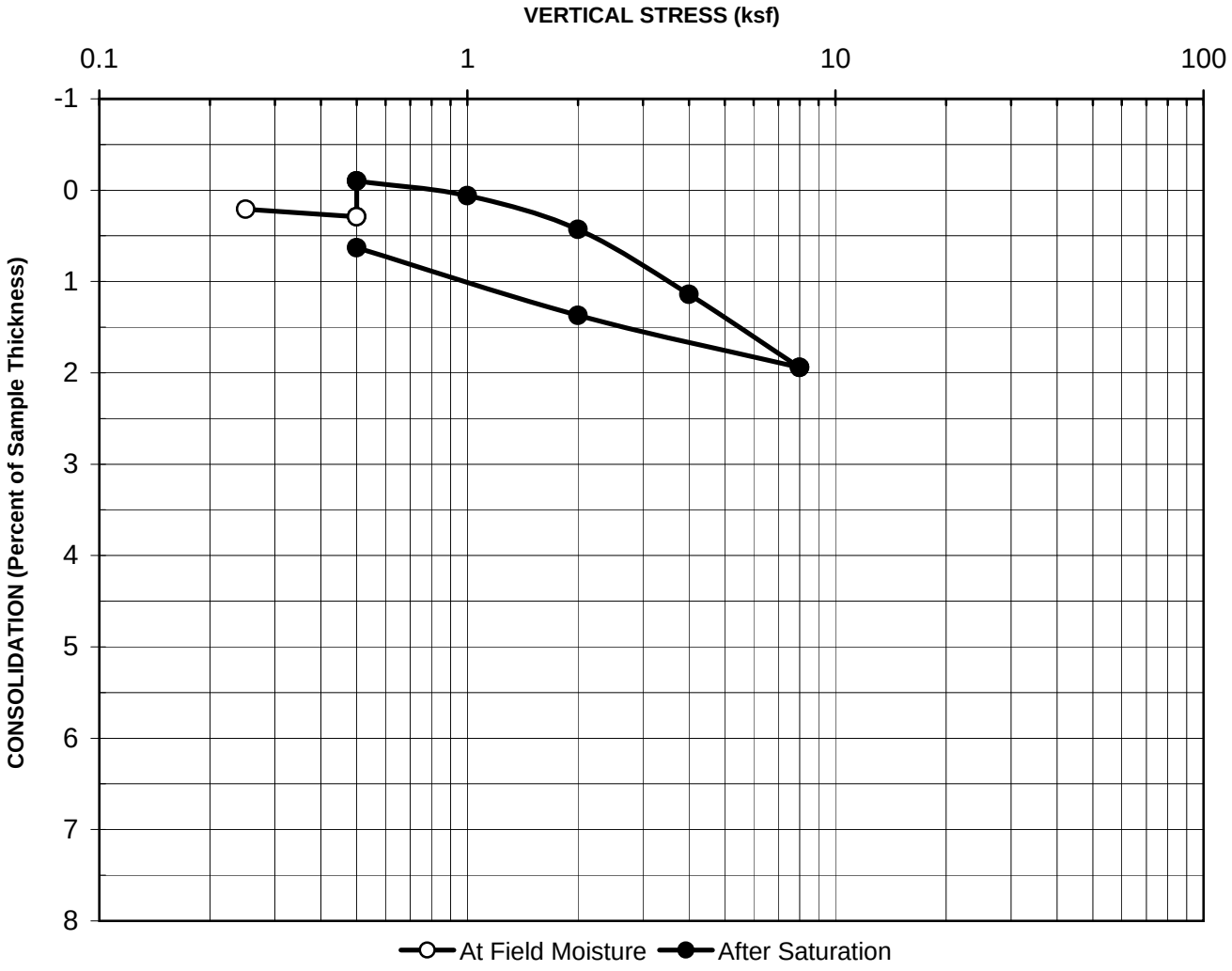

Boring No. :	DYB12-08	Initial Dry Unit Weight (pcf):	118.1
Sample No.:	3	Initial Moisture Content (%):	13.9
Depth (feet):	8	Final Moisture Content (%):	14.7
Sample Type:	Mod Cal	Assumed Specific Gravity:	2.7
Soil Description:	Sandy Clay	Initial Void Ratio:	0.43
Remarks:			

CONSOLIDATION CURVE
ASTM D 2435

Project Name: Torrance Transit Center
Project No.: 2012-017
Date: 10/18/2012
AP No: 12-1043

PLATE
B4

AP Engineering & Testing, Inc.

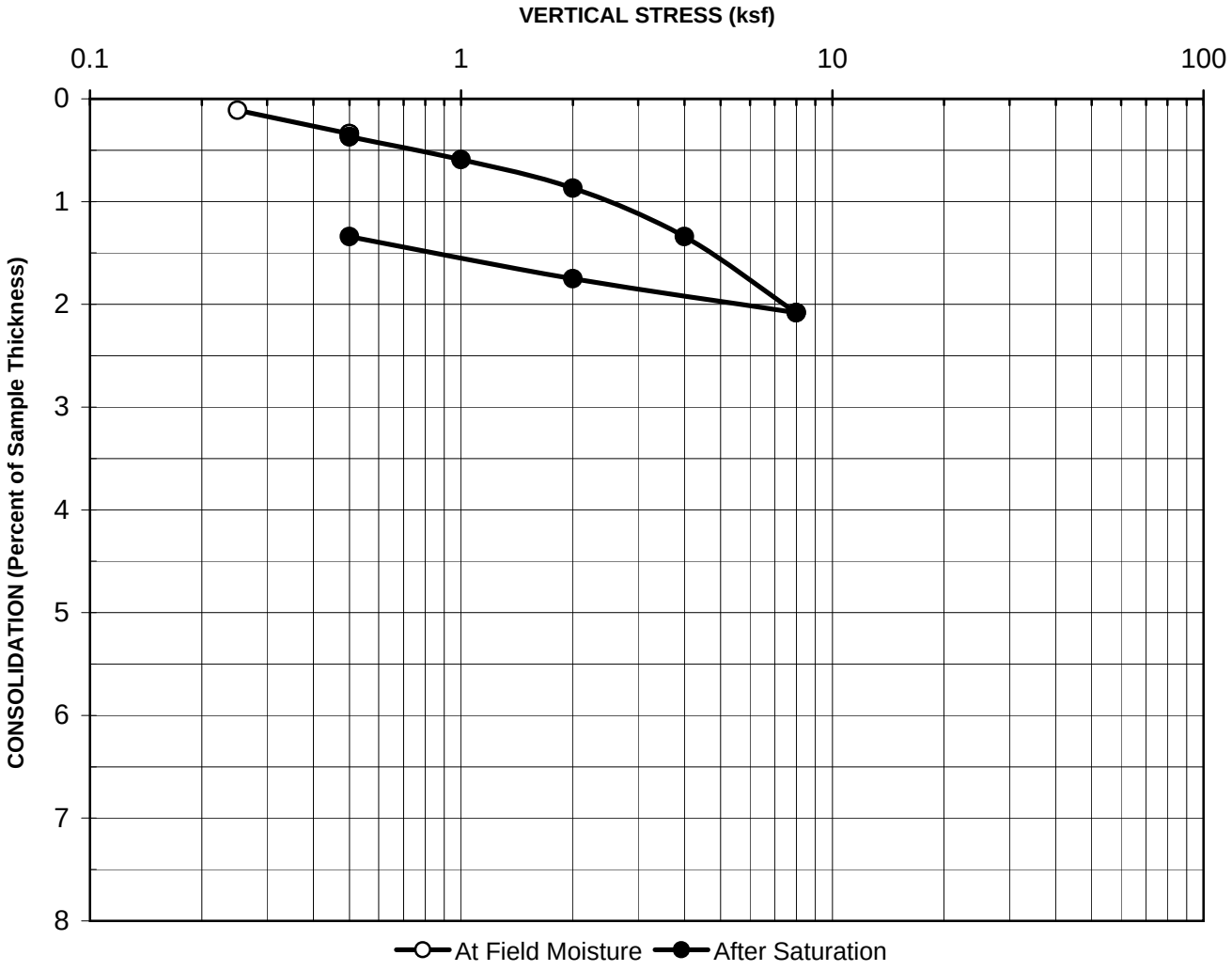

Boring No. :	DYB12-09	Initial Dry Unit Weight (pcf):	124.1
Sample No.:	1	Initial Moisture Content (%):	5.8
Depth (feet):	1	Final Moisture Content (%):	12.0
Sample Type:	Mod Cal	Assumed Specific Gravity:	2.7
Soil Description:	Silty Sand	Initial Void Ratio:	0.36
Remarks:			

CONSOLIDATION CURVE
ASTM D 2435

Project Name: Torrance Transit Center
Project No.: 2012-017
Date: 10/18/2012
AP No: 12-1043

PLATE
B5

AP Engineering & Testing, Inc.

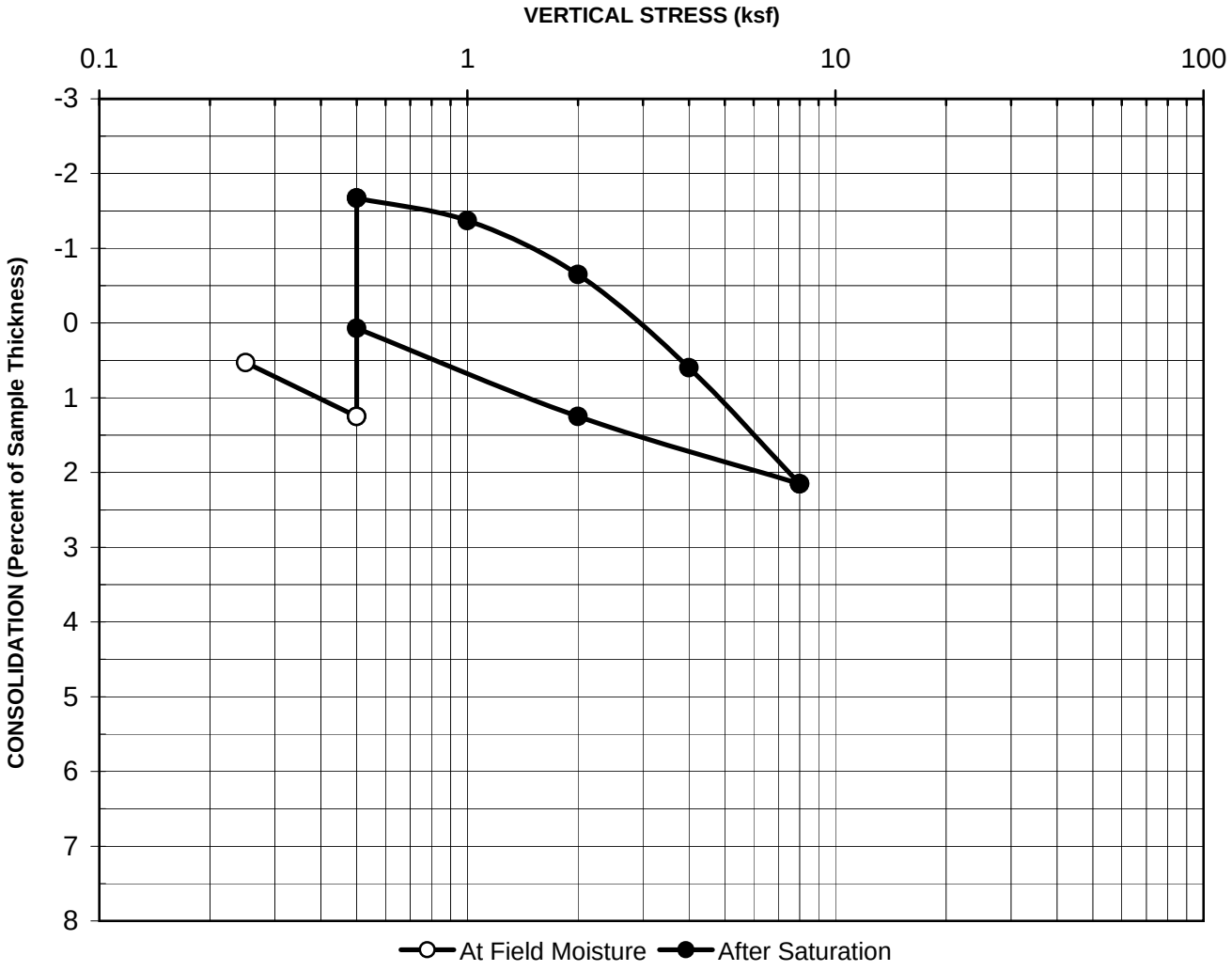

Boring No. :	DYB12-12	Initial Dry Unit Weight (pcf):	119.9
Sample No.:	1	Initial Moisture Content (%):	7.9
Depth (feet):	1	Final Moisture Content (%):	14.7
Sample Type:	Mod Cal	Assumed Specific Gravity:	2.7
Soil Description:	Sandy Clay	Initial Void Ratio:	0.41
Remarks:	Sample swelled upon inundation.		

CONSOLIDATION CURVE
ASTM D 2435

Project Name: Torrance Transit Center
Project No.: 2012-017
Date: 10/18/2012
AP No: 12-1043

PLATE
B6

AP Engineering & Testing, Inc.

DIRECT SHEAR TEST RESULTS
ASTM D 3080

Project Name:	Torrance Transit Center	Initial Dry Density:	103.7	pcf
Boring No.:	DYB12-08	Moisture Content (before):	4.9	%
Sample No.:	2	Moisture Content (after):	20.3	%
Depth (ft):	4			
Sample Type:	Mod. Cal.			
Soil Description:	Silty Sand			
Test Condition:	Inundated			

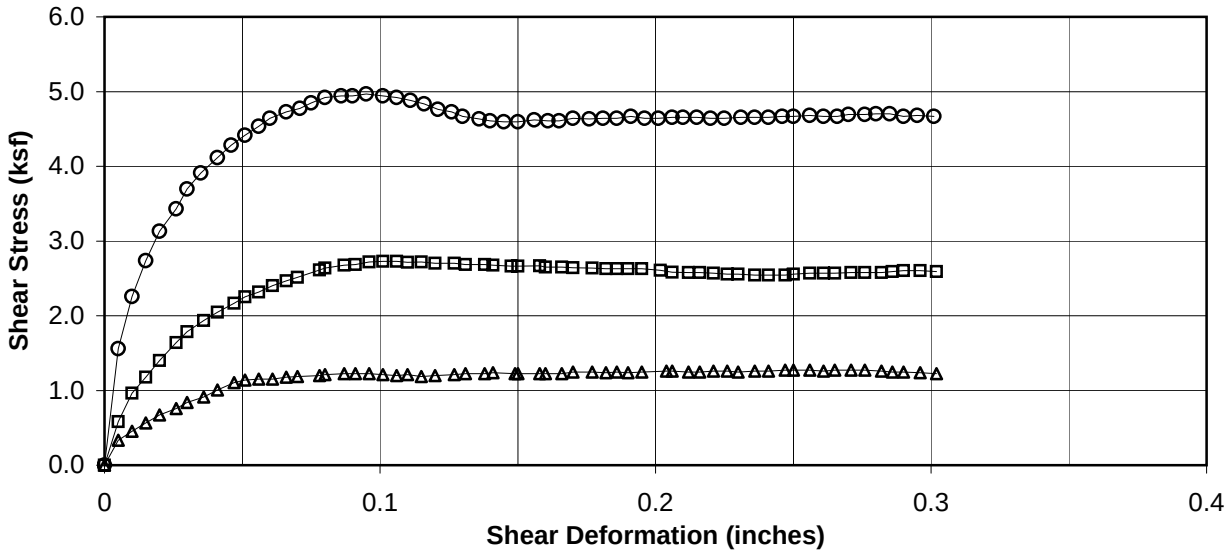

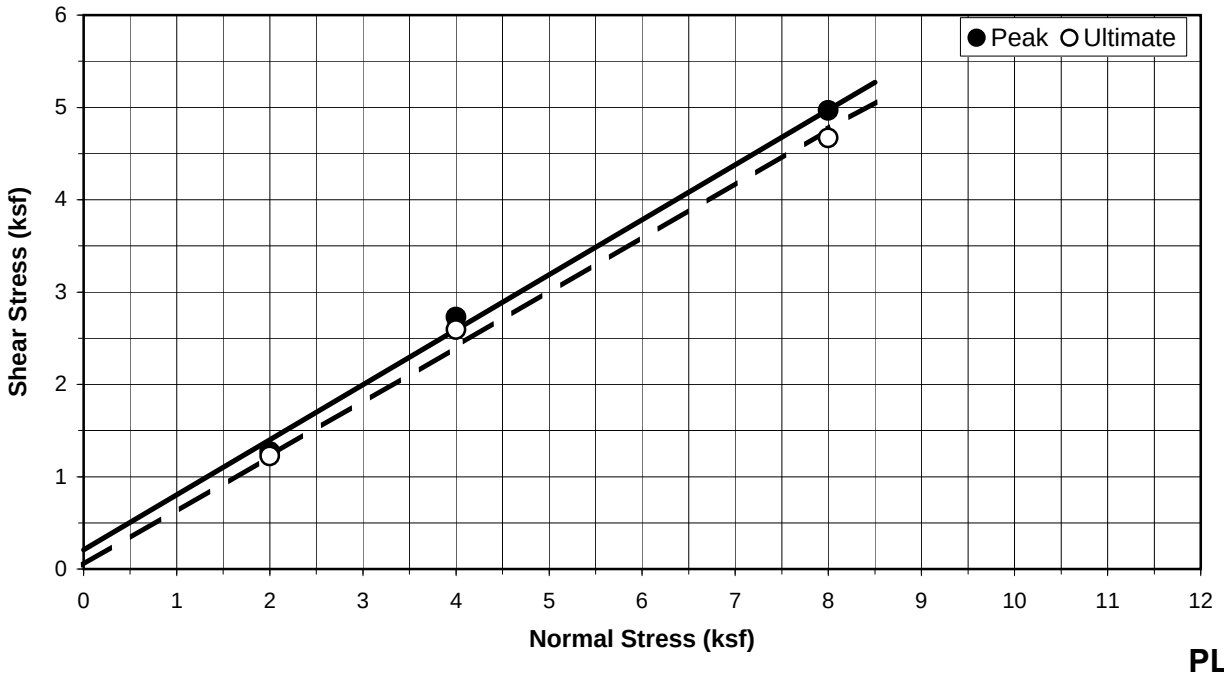

Strength Parameters	Peak	Ultimate
Cohesion (psf):	200	50
Friction Angle:	31 °	31 °

PLATE
B7

AP Engineering & Testing, Inc.

DIRECT SHEAR TEST RESULTS
ASTM D 3080

Project Name:	Torrance Transit Center	Initial Dry Density:	108.4	pcf
Boring No.:	DYB12-10	Moisture Content (before):	9.1	%
Sample No.:	4	Moisture Content (after):	19.8	%
Depth (ft):	15			
Sample Type:	Mod. Cal.			
Soil Description:	SiltySand, fine grained			
Test Condition:	Inundated			

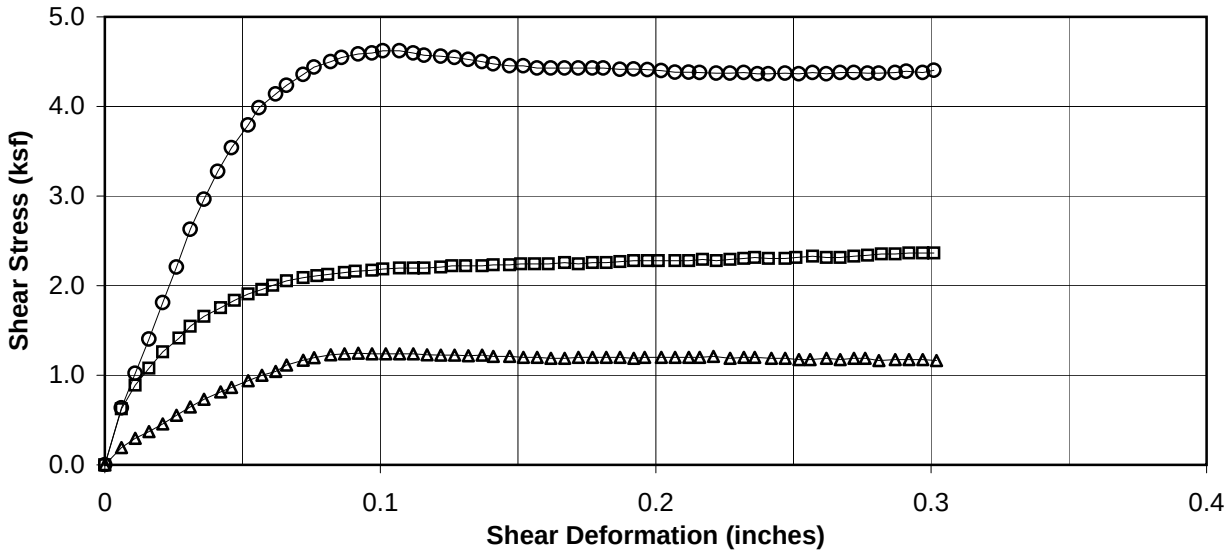

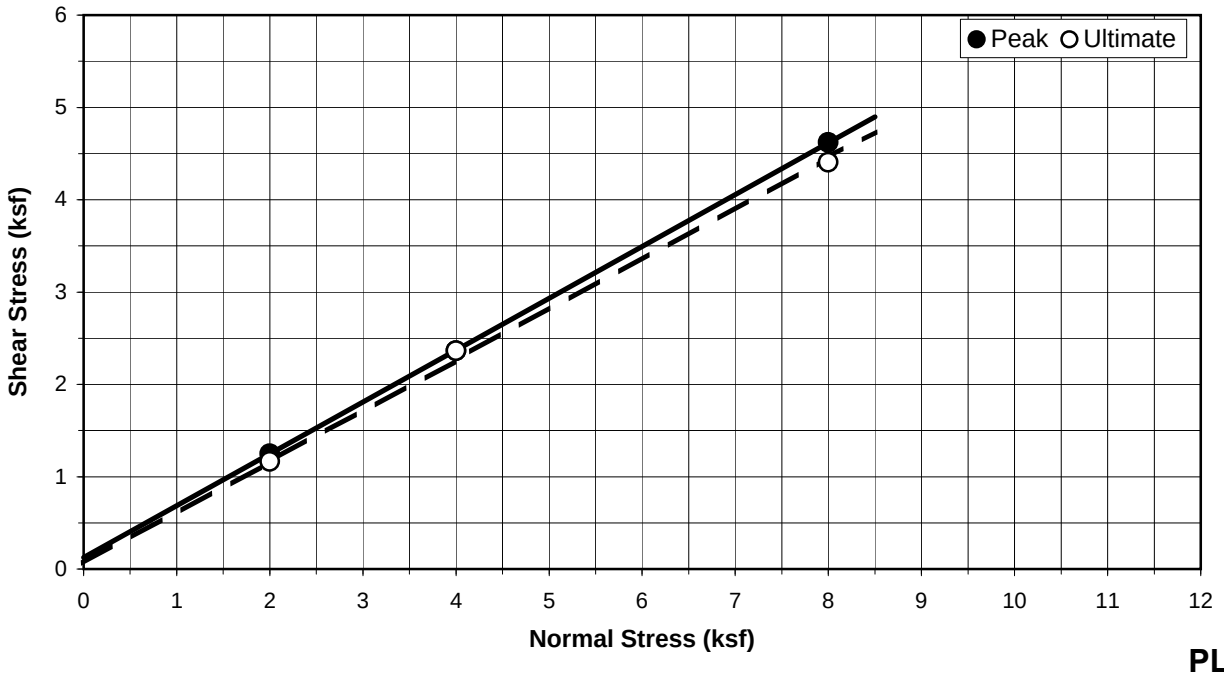

Strength Parameters	Peak	Ultimate
Cohesion (psf):	100	50
Friction Angle:	29 °	29 °

PLATE
B8

AP Engineering & Testing, Inc.

EXPANSION INDEX TEST RESULTS

ASTM D 4829

Client Name: Diaz Yourman

Project Name: Torrance Transit Center

Project No.: 2012-017

AP Job No.: 12-1043

Date: 10/19/12

Boring No.	Sample No.	Depth (ft)	Soil Description	Molded Dry Density (pcf)	Molded Moisture Content (%)	Init. Degree Saturation (%)	Measured Expansion Index	Corrected Expansion Index
DYB12-12	1	1	Sandy Clay	111.0	10.5	54.8	39	42

ASTM EXPANSION CLASSIFICATION

Expansion Index	Classification
0-20	V. Low
21-50	Low
51-90	Medium
91-130	High
>130	V. High

PLATE

B9

AP Engineering & Testing, Inc.

Geotechnical Testing Laboratory

ASTM D 2419
SAND EQUIVALENT TEST

Client Name: Diaz Yourman

Project Name: Torrance Transit Center

Project No.: 2012-017

AP Job No.: 12-1019

Test Date: 10/18/12

Boring No.	Sample No.	Sample Depth (ft.)	Soil Description	Clay Reading	Sand Reading	Corrected Sand Reading	Sand Equivalent
DYB12-07	Bulk	0-5	Silty Sand w/gravel	13.1	11.9	2	14

PLATE

B10

AP Engineering & Testing, Inc.

Geotechnical Testing Laboratory

ASTM D 2419
SAND EQUIVALENT TEST

Client Name: Diaz Yourman

Project Name: Torrance Transit Center

Project No.: 2012-017

AP Job No.: 12-1019

Test Date: 10/18/12

Boring No.	Sample No.	Sample Depth (ft.)	Soil Description	Clay Reading	Sand Reading	Corrected Sand Reading	Sand Equivalent
DYB12-13	Bulk	0-5	Silty Sand	14.0	11.7	2	12

PLATE

B11

AP Engineering & Testing, Inc.

R-VALUE TEST DATA

ASTM D2844

Project Name:	Torrance Transit Center	Tested By:	ST	Date:	10/18/12
Project Number:	2012-017	Computed By:	KM	Date:	10/26/12
Boring No.:	DYB12-01	Checked By:	AP	Date:	11/01/12
Sample No.:	Bulk	Depth (ft.):	0-5		
Location:	N/A				
Soil Description:	Silty Sand				

Mold Number	A	C	B	
Water Added, g	60	68	75	
Compact Moisture(%)	11.2	11.9	12.6	
Compaction Gage Pressure, psi	150	125	100	
Exudation Pressure, psi	448	300	144	
Sample Height, Inches	2.6	2.6	2.6	
Gross Weight Mold, g	3089	3082	3100	
Tare Weight Mold, g	1970	1969	1968	
Net Sample Weight, g	1119	1113	1132	
Expansion, inchesx10^{-4}	10	2	0	
Stability 2,000 (160 psi)	22/42	30/55	35/57	
Turns Displacement	3.83	3.98	4.45	
R-Value Uncorrected	65	55	50	
R-Value Corrected	67	57	52	
Dry Density, pcf	117.3	115.9	117.1	
Traffic Index	8.0	8.0	8.0	
G.E. by Stability	0.55	0.72	0.81	
G.E. by Expansion	0.33	0.07	0.00	

R-VALUE	By Exudation:	57
	By Expansion:	*N/A
	At Equilibrium: (by Exudation)	57
Remarks	Gf = 1.60, and 0.8 % Retained on the ¾"	

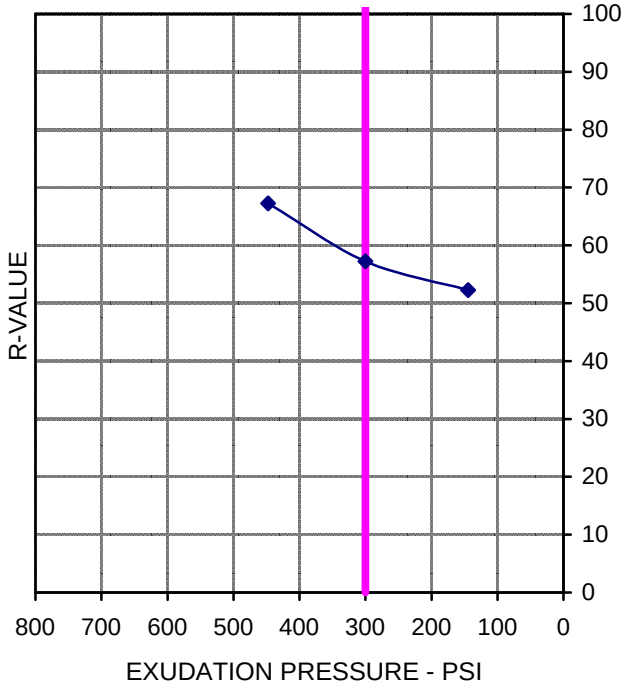

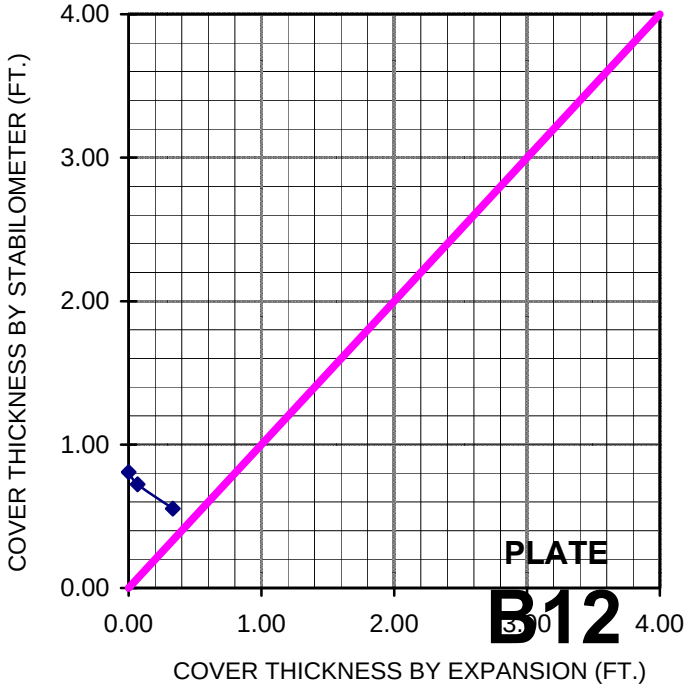

PLATE B12

2607 Pomona Blvd, Pomona, CA 91768, Tel (909)869-6316 Fax (909) 869-6318

AP Engineering & Testing, Inc.

R-VALUE TEST DATA

ASTM D2844

Project Name:	Torrance Transit Center	Tested By:	ST	Date:	10/18/12
Project Number:	2012-017	Computed By:	KM	Date:	10/26/12
Boring No.:	DYB12-07	Checked By:	AP	Date:	11/01/12
Sample No.:	Bulk	Depth (ft.):	0-5		
Location:	N/A				
Soil Description:	Silty Sand w/gravel				

Mold Number	G	I	H	
Water Added, g	80	73	65	
Compact Moisture(%)	12.9	12.2	11.4	
Compaction Gage Pressure, psi	60	100	150	
Exudation Pressure, psi	133	178	345	
Sample Height, Inches	2.6	2.5	2.5	
Gross Weight Mold, g	2950	2948	2921	
Tare Weight Mold, g	1830	1839	1821	
Net Sample Weight, g	1120	1109	1100	
Expansion, inchesx10^{-4}	0	0	20	
Stability 2,000 (160 psi)	60/138	58/134	45/107	
Turns Displacement	4.07	3.70	3.31	
R-Value Uncorrected	9	12	27	
R-Value Corrected	10	12	27	
Dry Density, pcf	115.6	119.8	119.7	
Traffic Index	8.0	8.0	8.0	
G.E. by Stability	1.53	1.50	1.23	
G.E. by Expansion	0.00	0.00	0.67	

R-VALUE	By Exudation:	23
	By Expansion:	*N/A
	At Equilibrium: (by Exudation)	23
Remarks	Gf = 1.60, and 3.3 % Retained on the ¾" *Not Applicable	

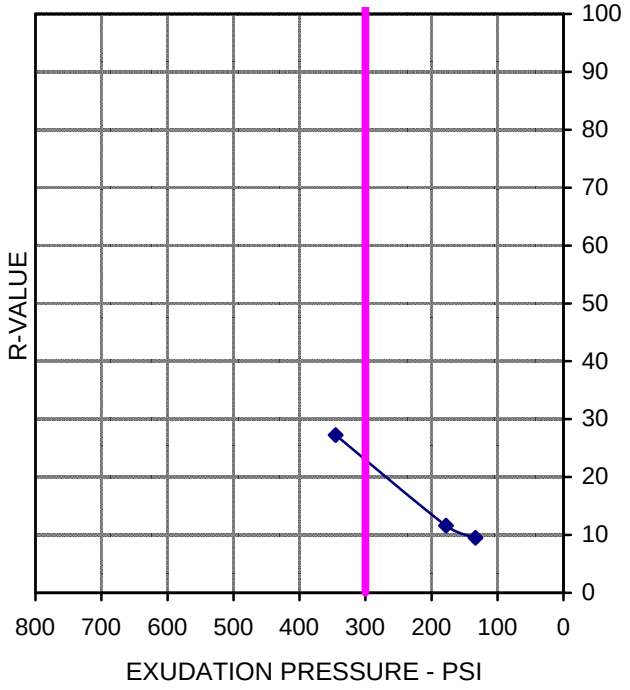

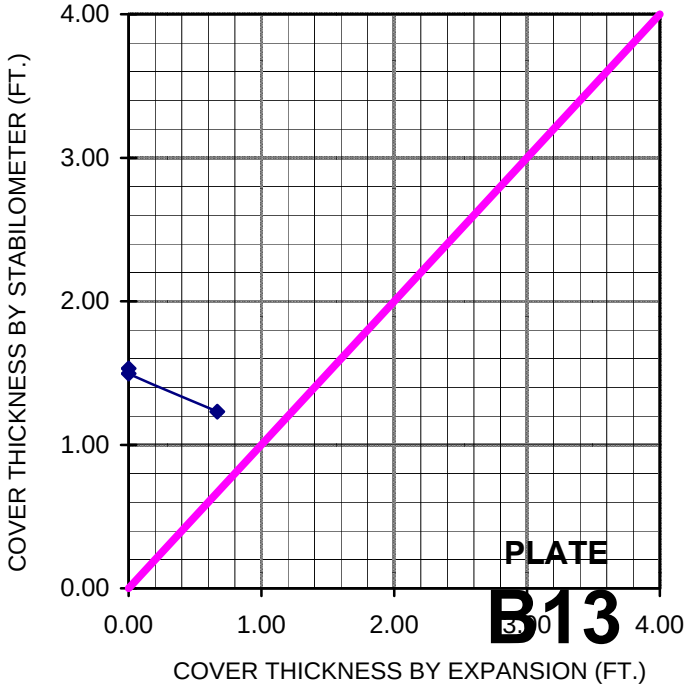

PLATE B13

2607 Pomona Blvd, Pomona, CA 91768, Tel (909)869-6316 Fax (909) 869-6318

AP Engineering & Testing, Inc.

R-VALUE TEST DATA

ASTM D2844

Project Name:	Torrance Transit Center	Tested By:	ST	Date:	10/18/12
Project Number:	2012-017	Computed By:	KM	Date:	10/26/12
Boring No.:	DYB12-13	Checked By:	AP	Date:	11/01/12
Sample No.:	Bulk	Depth (ft.):	0-5		
Location:	N/A				
Soil Description:	Silty Sand				

Mold Number	D	F	E	
Water Added, g	60	68	75	
Compact Moisture(%)	13.7	14.5	15.2	
Compaction Gage Pressure, psi	150	125	100	
Exudation Pressure, psi	343	260	219	
Sample Height, Inches	2.5	2.6	2.6	
Gross Weight Mold, g	3092	2995	3089	
Tare Weight Mold, g	1971	1872	1957	
Net Sample Weight, g	1121	1123	1132	
Expansion, inchesx10^{-4}	18	6	5	
Stability 2,000 (160 psi)	40/90	57/125	58/133	
Turns Displacement	3.31	3.70	3.72	
R-Value Uncorrected	37	16	12	
R-Value Corrected	37	17	13	
Dry Density, pcf	119.5	114.3	114.5	
Traffic Index	8.0	8.0	8.0	
G.E. by Stability	1.07	1.40	1.48	
G.E. by Expansion	0.60	0.20	0.17	

R-VALUE	By Exudation:	26
	By Expansion:	*N/A
	At Equilibrium: (by Exudation)	26
Remarks	Gf = 1.60, and 0.0 % Retained on the ¾" *Not Applicable	

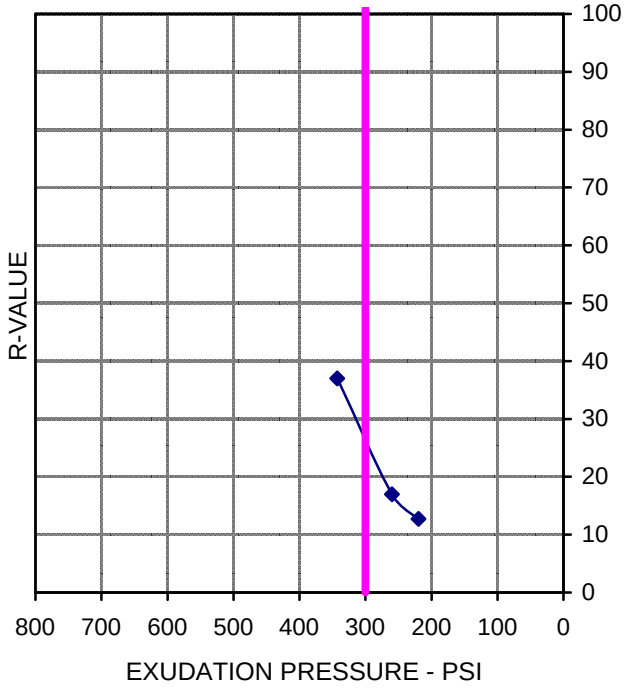

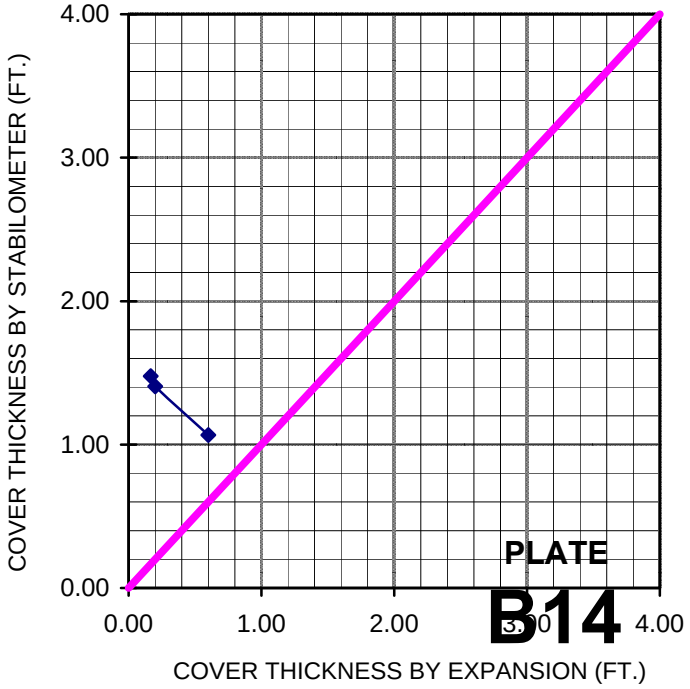

PLATE B14

2607 Pomona Blvd, Pomona, CA 91768, Tel (909)869-6316 Fax (909) 869-6318

AP Engineering & Testing, Inc.

CORROSION TEST RESULTS

Client Name: Diaz Yourman

Project Name: Torrance Transit Center

Project No.: 2012-017

AP Job No.: 12-1043

Date 10/18/12

Boring No.	Sample No.	Depth (feet)	Soil Type	Minimum Resistivity (ohm-cm)	pH	Sulfate Content (ppm)	Chloride Content (ppm)
DYB12-08	Bulk	0-5	SM	2275	7.3	232	35

NOTES:

Resistivity Test and pH: California Test Method 643

Sulfate Content : California Test Method 417

Chloride Content : California Test Method 422

ND = Not Detectable

NA = Not Sufficient Sample

NR = Not Requested

PLATE

B15

2607 Pomona Boulevard, Pomona, CA 91768
Tel. (909) 869-6316 Fax. (909)869-6318

AP Engineering & Testing, Inc.

CORROSION TEST RESULTS

Client Name: Diaz Yourman

Project Name: Torrance Transit Center

Project No.: 2012-017

AP Job No.: 12-1043

Date 10/18/12

Boring No.	Sample No.	Depth (feet)	Soil Type	Minimum Resistivity (ohm-cm)	pH	Sulfate Content (ppm)	Chloride Content (ppm)
DYB12-10	1	2	SM	4636	7.6	88	54

NOTES:

Resistivity Test and pH: California Test Method 643

Sulfate Content : California Test Method 417

Chloride Content : California Test Method 422

ND = Not Detectable

NA = Not Sufficient Sample

NR = Not Requested

PLATE

B16

2607 Pomona Boulevard, Pomona, CA 91768
Tel. (909) 869-6316 Fax. (909)869-6318

DISTRIBUTION

1 copies: Keith Fine
1016 N. Harbor Boulevard
Fullerton, CA 92832

QUALITY CONTROL REVIEWER
V. R. Nadeswaran, PE, GE
Principal
MD/SW:dr

APPENDIX I

PUBLIC WORKS AGREEMENT, CITY OF TORRANCE PERMIT AND BUSINESS LICENSE

PUBLIC WORKS AGREEMENT

This PUBLIC WORKS AGREEMENT ("Agreement") is made and entered into as of DATE (the "Effective Date"), by and between the CITY OF TORRANCE, a municipal corporation ("CITY"), and CONTRACTOR NAME, TYPE OF ENTITY ("CONTRACTOR").

RECITALS:

A. The CITY wishes to retain the services of an experienced and qualified CONTRACTOR to construct the Torrance Transit Park and Ride Regional Terminal Phase 1- Rough Grading, B2015-35;

B. In order to obtain the desired services, The CITY has circulated a Notice Inviting Bids for the construction of the Torrance Transit Park and Ride Regional Terminal Phase 1- Rough Grading, B2015-35, (the "NIB"); and

C. CONTRACTOR has submitted a Bid (the "Bid") in response to the NIB. CONTRACTOR represents that it is qualified to perform those services requested in the Plans and Specifications. Based upon its review of all Bids submitted in response to the NIB, The CITY is willing to award the contract to CONTRACTOR.

AGREEMENT:

1. <u>SERVICES TO BE PERFORMED BY CONTRACTOR</u>

CONTRACTOR will provide the services and install those materials listed in the Plans and Specifications, which are on file in the Public Works Department. The NIB and the Plans and Specifications are made a part of this Agreement. A copy of the Bid is attached as Exhibit A.

2. <u>TERM</u>

Unless earlier terminated in accordance with Paragraph 4 below, this Agreement will continue in full force and effect for one year from the Effective Date.

3. <u>COMPENSATION</u>

A. CONTRACTOR's Fee.

For services rendered pursuant to this Agreement, CONTRACTOR will be paid in accordance with CONTRACTOR's Bid; provided, however, that in no event will the total amount of money paid the CONTRACTOR, for services initially contemplated by this Agreement, exceed the contract amount of $_____.

("Agreement Sum"), unless otherwise first approved in writing by the CITY.

B. Schedule of Payment.
Provided that the CONTRACTOR is not in default under the terms of this Agreement, upon presentation of an invoice, CONTRACTOR will be paid monthly, within 30 days after the date of the monthly invoice.

4. TERMINATION OF AGREEMENT

A. Termination by CITY for Convenience.

1. CITY may, at any time, terminate the Agreement for CITY's convenience and without cause.

2. Upon receipt of written notice from CITY of such termination for CITY's convenience, CONTRACTOR will:

   a) cease operations as directed by CITY in the notice;
   b) take actions necessary, or that CITY may direct, for the protection and preservation of the work; and
   c) except for work directed to be performed prior to the effective date of termination stated in the notice, terminate all existing subcontracts and purchase orders and enter into no further subcontracts and purchase orders.

3. In case of such termination for CITY's convenience, CONTRACTOR will be entitled to receive payment for work executed; and costs incurred by reason of such termination, along with reasonable overhead and profit on the work not executed.

B. Termination for Cause.

1. If either party fails to perform any term, covenant or condition in this Agreement and that failure continues for 15 calendar days after the nondefaulting party gives the defaulting party notice of the failure to perform, this Agreement may be terminated for cause; provided, however, that if during the notice period the defaulting party has promptly commenced and continues diligent efforts to remedy the default, the defaulting party will have such additional time as is reasonably necessary to remedy the default.

2. In the event this Agreement is terminated for cause by the default of the CONTRACTOR, the CITY may, at the expense of the CONTRACTOR and its surety, complete this Agreement or cause it to be completed. Any check or bond delivered to the

CITY in connection with this Agreement, and the money payable thereon, will be forfeited to and remain the property of the CITY. All moneys due the CONTRACTOR under the terms of this Agreement will be retained by the CITY, but the retention will not release the CONTRACTOR and its surety from liability for the default. Under these circumstances, however, the CONTRACTOR and its surety will be credited with the amount of money retained, toward any amount by which the cost of completion exceeds the Agreement Sum and any amount authorized for extra services.

3. Termination for cause will not affect or terminate any of the rights of the CITY as against the CONTRACTOR or its surety then existing, or which may thereafter accrue because of the default; this provision is in addition to all other rights and remedies available to the CITY under law.

C. Termination for Breach of Law.

In the event the CONTRACTOR or any of its officers, directors, shareholders, employees, agents, subsidiaries or affiliates is convicted (i) of a criminal offense as an incident to obtaining or attempting to obtain a public or private contract or subcontract, or in the performance of a contract or subcontract; (ii) under state or federal statutes of embezzlement, theft, forgery, bribery, falsification or destruction of records, receiving stolen property, or any other offense indicating a lack of business integrity or business honesty which currently, seriously, and directly affects responsibility as a public consultant or contractor; (iii) under state or federal antitrust statutes arising out of the submission of bids or proposals; or (iv) of violation of Paragraph 19 of this Agreement; or for any other cause the CITY determines to be so serious and compelling as to affect CONTRACTOR's responsibility as a public consultant or contractor, including but not limited to, debarment by another governmental agency, then the CITY reserves the unilateral right to terminate this Agreement or to impose such other sanctions (which may include financial sanctions, temporary suspensions or any other condition deemed appropriate short of termination) as it deems proper. The CITY will not take action until CONTRACTOR has been given notice and an opportunity to present evidence in mitigation.

5. FORCE MAJEURE

If any party fails to perform its obligations because of strikes, lockouts, labor disputes, embargoes, acts of God, inability to obtain labor or materials or reasonable substitutes for labor or materials, governmental restrictions, governmental regulations, governmental controls, judicial

orders, enemy or hostile governmental action, civil commotion, fire or other casualty, or other causes beyond the reasonable control of the party obligated to perform, then that party's performance shall be excused for a period equal to the period of such cause for failure to perform.

6. RETENTION OF FUNDS

CONTRACTOR authorizes the CITY to deduct from any amount payable to CONTRACTOR (whether or not arising out of this Agreement) any amounts the payment of which may be in dispute or that are necessary to compensate the CITY for any losses, costs, liabilities, or damages suffered by the CITY, and all amounts for which the CITY may be liable to third parties, by reason of CONTRACTOR's negligent acts or omissions or willful misconduct in performing or failing to perform CONTRACTOR's obligations under this Agreement. In the event that any claim is made by a third party, the amount or validity of which is disputed by CONTRACTOR, or any indebtedness exists that appears to be the basis for a claim of lien, the CITY may withhold from any payment due, without liability for interest because of the withholding, an amount sufficient to cover the claim. The failure of the CITY to exercise the right to deduct or to withhold will not, however, affect the obligations of CONTRACTOR to insure, indemnify, and protect the CITY as elsewhere provided in this Agreement.

7. THE CITY'S REPRESENTATIVE

The Public Works Director is designated as the "City Representative," authorized to act in its behalf with respect to the work and services specified in this Agreement and to make all decisions in connection with this Agreement. Whenever approval, directions, or other actions are required by the CITY under this Agreement, those actions will be taken by the City Representative, unless otherwise stated. The City Manager has the right to designate another City Representative at any time, by providing notice to CONTRACTOR.

8. CONTRACTOR REPRESENTATIVE(S)

The following principal(s) of CONTRACTOR are designated as being the principal(s) and representative(s) of CONTRACTOR authorized to act in its behalf with respect to the work specified in this Agreement and make all decisions in connection with this Agreement:

REPRESENTATIVE 1
REPRESENTATIVE 2

9. INDEPENDENT CONTRACTOR

The CONTRACTOR is, and at all times will remain as to the CITY, a wholly independent contractor. Neither the CITY nor any of its agents will have control over the conduct of the CONTRACTOR or any of the CONTRACTOR's employees, except as otherwise set forth in this Agreement. The CONTRACTOR may not, at any time or in any manner, represent that it or any of its agents or employees are in any manner agents or employees of the CITY. CITY has no duty, obligation, or responsibility to CONTRACTOR's agents or employees under the Affordable Care Act. CONTRACTOR is solely responsible for any tax penalties associated with the failure to offer affordable coverage to its agents and employees under the Affordable Care Act and any other liabilities, claims and obligations regarding compliance with the Affordable Care Act with respect to CONTRACTOR's agents and employees. CITY is not responsible and shall not be held liable for CONTRACTOR's failure to comply with CONTRACTOR's duties, obligations, and responsibilities under the Affordable Care Act. CONTRACTOR agrees to defend, indemnify and hold CITY harmless for any and all taxes and penalties that may be assessed against CITY as a result of CONTRACTOR's obligations under the Affordable Care Act relating to CONTRACTOR's agents and employees.

10. BUSINESS LICENSE

The CONTRACTOR must obtain a City business license prior to the start of work under this Agreement, unless CONTRACTOR is qualified for an exemption.

11. OTHER LICENSES AND PERMITS

CONTRACTOR warrants that it has all professional, contracting and other permits and licenses required to undertake the work contemplated by this Agreement.

12. FAMILIARITY WITH WORK

By executing this Agreement, CONTRACTOR warrants that CONTRACTOR (a) has thoroughly investigated and considered the scope of services to be performed, (b) has carefully considered how the services should be performed, and (c) fully understands the facilities, difficulties and restrictions attending performance of the services under this Agreement. If the services involve work upon any site, CONTRACTOR warrants that CONTRACTOR has or will investigate the site and is or will be fully acquainted with the conditions there existing, prior to commencement of services set forth in this Agreement. Should CONTRACTOR discover any latent or unknown conditions that will

materially affect the performance of the services set forth in this Agreement, CONTRACTOR must immediately inform the CITY of that fact and may not proceed except at CONTRACTOR's risk until written instructions are received from the CITY.

13. CARE OF WORK

CONTRACTOR must adopt reasonable methods during the life of the Agreement to furnish continuous protection to the work, and the equipment, materials, papers, documents, plans, studies and other components to prevent losses or damages, and will be responsible for all damages, to persons or property, until acceptance of the work by the CITY, except those losses or damages as may be caused by the CITY's own negligence.

14. CONTRACTOR'S ACCOUNTING RECORDS; OTHER PROJECT RECORDS

Records of the CONTRACTOR's time pertaining to the project, and records of accounts between the CITY and the CONTRACTOR, will be kept on a generally recognized accounting basis. CONTRACTOR will also maintain all other records, including without limitation specifications, drawings, progress reports and the like, relating to the project. All records will be available to the CITY during normal working hours. CONTRACTOR will maintain these records for three years after final payment.

15. INDEMNIFICATION

CONTRACTOR will indemnify, defend, and hold harmless CITY, the Successor Agency to the Former Redevelopment Agency of the City of Torrance, the City Council, each member thereof, present and future, its officers, agents and employees from and against any and all liability, expenses, including defense costs and legal fees, and claims for damages whatsoever, including, but not limited to, those arising from breach of contract, bodily injury, death, personal injury, property damage, loss of use, or property loss however the same may be caused and regardless of the responsibility for negligence. The obligation to indemnify, defend and hold harmless includes, but is not limited to, any liability or expense, including defense costs and legal fees, arising from the negligent acts or omissions, or willful misconduct of CONTRACTOR, its officers, employees, agents, subcontractors or vendors. It is further agreed, CONTRACTOR's obligations to indemnify, defend and hold harmless will apply even in the event of concurrent negligence on the part of CITY, the City Council, each member thereof, present and future, or its officers, agents and employees, except for liability resulting solely from the negligence or willful misconduct of CITY, its officers, employees or agents.

Payment by CITY is not a condition precedent to enforcement of this indemnity. In the event of any dispute between CONTRACTOR and CITY, as to whether liability arises from the sole negligence of the CITY or its officers, employees, agents, subcontractors or vendors, CONTRACTOR will be obligated to pay for CITY's defense until such time as a final judgment has been entered adjudicating the CITY as solely negligent. CONTRACTOR will not be entitled in the event of such a determination to any reimbursement of defense costs including but not limited to attorney's fees, expert fees and costs of litigation.

16. NON-LIABILITY OF THE CITY'S OFFICERS AND EMPLOYEES

No officer or employee of the CITY will be personally liable to CONTRACTOR, in the event of any default or breach by the CITY or for any amount that may become due to CONTRACTOR.

17. INSURANCE

A. CONTRACTOR must maintain at its sole expense the following insurance, which will be full coverage not subject to self insurance provisions:

1. Automobile Liability, including owned, non-owned and hired vehicles, with at least the following limits of liability:

   a. Combined single limits of $2,000,000 per occurrence.

2. General Liability including coverage for premises, products and completed operations, independent contractors, personal injury and contractual obligations with combined single limits of coverage of at least $3,000,000 per occurrence, with an annual aggregate of no less than $5,000,000.

3. Workers' Compensation with limits as required by the State of California and Employers Liability with limits of at least $1,000,000.

B. The insurance provided by CONTRACTOR will be primary and non-contributory.

C. CITY, the Successor Agency to the Former Redevelopment Agency of the City of Torrance, the City Council and each member thereof, members of boards and commissions, every officer, agent, official, employee and volunteer must be named as additional insureds under the automobile and general liability policies.

D. CONTRACTOR must provide certificates of insurance and/or endorsements to the City Clerk of the City of Torrance before the commencement of work.

E. Each insurance policy required by this Paragraph must contain a provision that no termination, cancellation or change of coverage can be made without thirty days notice to the CITY.

F. CONTRACTOR must include all subcontractors as insureds under its policies or must furnish separate certificates and endorsements for each subcontractor. All coverage for subcontractors will be subject to all of the requirements of this Paragraph 17.

18. SUFFICIENCY OF INSURERS

Insurance required by this Agreement will be satisfactory only if issued by companies admitted to do business in California, rated "B+" or better in the most recent edition of Best's Key Rating Guide, and only if they are of a financial category Class VII or better, unless these requirements are waived by the Risk Manager of the CITY ("Risk Manager") due to unique circumstances. In the event the Risk Manager determines that the work or services to be performed under this Agreement creates an increased or decreased risk of loss to the CITY, the CONTRACTOR agrees that the minimum limits of any insurance policies and/or the performance bond required by this Agreement may be changed accordingly upon receipt of written notice from the Risk Manager; provided that CONTRACTOR will have the right to appeal a determination of increased coverage by the Risk Manager to the City Council of the CITY within 10 days of receipt of notice from the Risk Manager.

19. CONFLICT OF INTEREST

A. No officer or employee of the CITY may have any financial interest, direct or indirect, in this Agreement, nor may any officer or employee participate in any decision relating to the Agreement that effects the officer or employee's financial interest or the financial interest of any corporation, partnership or association in which the officer or employee is, directly or indirectly interested, in violation of any law, rule or regulation.

No person may offer, give, or agree to give any officer or employee or former officer or employee, nor may any officer or employee solicit, demand, accept, or agree to accept from another person, a gratuity or an offer of employment in connection with any decision, approval, disapproval, recommendation, preparation or any part of a program

requirement or a purchase request, influencing the content of any specification or procurement standard, rendering of advice, investigation, auditing, or in any other advisory capacity in any way pertaining to any program requirement, contract or subcontract, or to any solicitation or proposal.

20. NOTICE

A. All notices, requests, demands, or other communications under this Agreement will be in writing. Notice will be sufficiently given for all purposes as follows:

1. Personal delivery. When personally delivered to the recipient: notice is effective on delivery.

2. First Class mail. When mailed first class to the last address of the recipient known to the party giving notice: notice is effective three mail delivery days after deposit in an United States Postal Service office or mailbox.

3. Certified mail. When mailed certified mail, return receipt requested: notice is effective on receipt, if delivery is confirmed by a return receipt.

4. Overnight delivery. When delivered by an overnight delivery service, charges prepaid or charged to the sender's account: notice is effective on delivery, if delivery is confirmed by the delivery service.

5. Facsimile transmission. When sent by fax to the last fax number of the recipient known to the party giving notice: notice is effective on receipt. Any notice given by fax will be deemed received on the next business day if it is received after 5:00 p.m. (recipient's time) or on a non-business day.

6. Addresses for purpose of giving notice are as follows:

CONTRACTOR:	NAME AND ADDRESS Fax:
CITY:	City Clerk City of Torrance 3031 Torrance Boulevard Torrance, CA 90509-2970 Fax: (310) 618-2931

with a copy to: Attn:Ted Semaan
Public Works Department
City of Torrance
20500 Madrona Avenue
Torrance, CA 90503
Fax: (310) 781-6902

B. Any correctly addressed notice that is refused, unclaimed, or undeliverable because of an act or omission of the party to be notified, will be deemed effective as of the first date the notice was refused, unclaimed or deemed undeliverable by the postal authorities, messenger or overnight delivery service.

C. Either party may change its address or fax number by giving the other party notice of the change in any manner permitted by this Agreement.

21. PROHIBITION AGAINST ASSIGNMENT AND SUBCONTRACTING

This Agreement and all exhibits are binding on the heirs, successors, and assigns of the parties. The Agreement may not be assigned or subcontracted by either the CITY or CONTRACTOR without the prior written consent of the other.

22. INTEGRATION; AMENDMENT

This Agreement represents the entire understanding of the CITY and CONTRACTOR as to those matters contained in it. No prior oral or written understanding will be of any force or effect with respect to the terms of this Agreement. The Agreement may not be modified or altered except in writing signed by both parties.

23. INTERPRETATION

The terms of this Agreement should be construed in accordance with the meaning of the language used and should not be construed for or against either party by reason of the authorship of this Agreement or any other rule of construction that might otherwise apply.

24. SEVERABILITY

If any part of this Agreement is found to be in conflict with applicable laws, that part will be inoperative, null and void insofar as it is in conflict with any applicable laws, but the remainder of the Agreement will remain in full force and effect.

25. TIME OF ESSENCE

Time is of the essence in the performance of this Agreement.

26. GOVERNING LAW; JURISDICTION

This Agreement will be administered and interpreted under the laws of the State of California. Jurisdiction of any litigation arising from the Agreement will be in Los Angeles County, California.

27. COMPLIANCE WITH STATUTES AND REGULATIONS

CONTRACTOR will be knowledgeable of and will comply with all applicable federal, state, county and city statutes, rules, regulations, ordinances and orders.

28. WAIVER OF BREACH

No delay or omission in the exercise of any right or remedy by a non-defaulting party on any default will impair the right or remedy or be construed as a waiver. A party's consent or approval of any act by the other party requiring the party's consent or approval will not be deemed to waive or render unnecessary the other party's consent to or approval of any subsequent act. Any waiver by either party of any default must be in writing and will not be a waiver of any other default concerning the same or any other provision of this Agreement.

29. ATTORNEY'S FEES

Except as provided for in Paragraph 15, in any dispute, litigation, arbitration, or other proceeding by which one party either seeks to enforce its rights under this Agreement (whether in contract, tort or both) or seeks a declaration of any rights or obligations under this Agreement, the prevailing party will be awarded reasonable attorney's fees, together with any costs and expenses, to resolve the dispute and to enforce any judgment.

30. EXHIBITS

All exhibits identified in this Agreement are incorporated into the Agreement by this reference.

31. CONTRACTOR'S AUTHORITY TO EXECUTE

The persons executing this Agreement on behalf of the CONTRACTOR warrant that (i) the CONTRACTOR is duly organized and existing; (ii) they

are duly authorized to execute this Agreement on behalf of the CONTRACTOR; (iii) by so executing this Agreement, the CONTRACTOR is formally bound to the provisions of this Agreement; and (iv) the entering into this Agreement does not violate any provision of any other Agreement to which the CONTRACTOR is bound.

CITY OF TORRANCE,
a municipal corporation

_____
Patrick J. Furey, Mayor

ATTEST:

_____
Rebecca Poirier, MMC
City Clerk

APPROVED AS TO

FORM: JOHN L.

FELLOWS III
City Attorney

By: _____

BUSINESS OR INDIVIDUAL NAME
TYPE OF ENTITY

By: _____
SIGNER, TITLE

Attachment: Exhibit A: Bid
Revised: 7/15/14

EXHIBIT A

Bid

(To be attached)

City of Torrance, Community Development Department

Permit Application Form

3031 TORRANCE BLVD. • TORRANCE, CA 90503

OWNER/APPLICANT INFORMATION

Name: _____

Address: _____

City/State: _____

Zip: _____

Phone: _____

Evacuation permits will not be issued without USA I.D. number.

Underground Service Alert
Call 1-800/227-2600

USA I.D.#: _____

CONTRACTOR INFORMATION ON FILE

_____

_____

_____

_____

_____

State License #: _____

Class: _____ Exp. Date: _____

City Business#: _____

Workers Comp. #: _____

Exp. Date: _____

JOB LOCATION/ADDRESS

(or closest street address)

Please list cross streets: _____

_____

DESCRIPTION OF WORK

_____

_____

Lin/Ft Trench _____ Width of Trench _____ Lin/Ft Curb & Gutter _____

Lin/Ft Bore _____ Sewer Connection _____ Number of Curb Drains _____

Sq/Ft Asphalt _____ Sq/Ft Concrete _____ Sq/Ft Dirt _____

Work Order Number *(for utility companies)*: _____

Applicant or Authorized Signature: _____

For further permit information, please call 310/618-5898 or Fax 310/618-2846.

Contractor Qualification List

Curb/Gutter ..... A(General Engineering)
C8(Concrete Contractor)

Driveways ..... A(General Engineering)
C8(Concrete Contractor)

Sidewalks ..... A(General Engineering)
B(General Building)
C8(Concrete Contractor)

Street/Alley ..... A(General Engineering)
C8(Concrete Contractor)
C12(Earth and Paving Contractor)

Sewer Lateral ..... A (General Engineering)
C34(Pipeline Contractor)
C42(Sanitation Contractor)

Sewer Mainline ..... A(General Engineering)
C34(Pipeline Contractor)
C42(Sanitation Contractor)

Storm Drains ..... A(General Engineering)
C34(Pipeline Contractor)
C42(Sanitation Contractor)

U/G Utilities ..... A (General Engineering)
(Water, Gas or Oil) C34 (Pipeline Contractor)

U/G Electrical ..... A (General Engineering)
C8 (Concrete Contractor)
C12 (Earth and Paving Contractors)

Contractor Qualification List

1) FOR INSPECTIONS 24 hour notice is required, before, during, and after construction. Call 310-618-5898, 7:30 AM – 5:30 PM, to SCHEDULE AN INSEPCTION.

2) Provide TRAFFIC CONTROL per the "CITY OF TORRANCE CONSTRUCTION TRAFFIC CONTROL PROCEDURES." Street closures shall be per City of Torrance Standard T603. Major street lane closures between 8:30 AM – 3:30 PM only. ONE STANDARD ARROWBOARD REQUIRED FOR EACH LANE CLOSURE.

3) Permitt is not valid until two working days after notifying DIG-ALERT of project. USA # _____ .

4) Do not remove any trees or shrubs without approval of Torrance Tree Supervisor (310-781-6900).

5) Contractor will be billed for overtime inspection services. OVERTIME REQUESTS must be submitted for approval 24 hrs in advance.

6) Construction site CLEANUP and GRAFFITI removal must be completed prior to finaling of this permit. The work site shall be kept in a well maintained condition. Signage shall be free of graffiti, replaced if bent, vandalized or displays loss of reflectivity. Any graffiti on construction signs must be removed or replaced within 24 hours of notification.

7) Any street striping, crosswalk, raised reflective pavement marker or pavement markings damaged by this construction shall be replaced to the satisfaction of the Torrance Public Works Department (310-781-6900).

8) THIS PERMIT WILL BE REVOKED if any pollutant is released into or allowed to remain in any component of the city drainage system.

9) Trench backfill and pavement repairs shall be per City of Torrance Standard T116.

10) Any irrigation system components damaged by this construction shall be replaced to the satisfaction of Park Services (310-618-2930).

11) All survey monuments in the project area MUST be located and tied out and a Corner Record filed prior to the start of construction. Also, all destroyed monuments must be replaced prior to receiving final inspection.

12) It is the responsibility of the contractor to REPLACE any PAVEMENT removed by this construction.

13) The City of Torrance is held harmless from the results of any action or accidents caused by the permittee, his employees, or equipment in the performance of the work described or covered in this permit. Validation of this permit SHALL NOT be held to permit or to be an approval of the violation of any applicable provision of the City Code covering this work, or any other provisions of the City of Torrance Code. In the granting of a Construction & Excavation permit, the Community Development Director may impose such conditions thereon, in addition to those otherwise provided herein, as are reasonably necessary to prevent the proposed operations from being conducted in such a manner as to constitute or create a HAZARD TO LIFE or property or be detrimental to property.

NOTICE
CITY OF TORRANCE
COMMUNITY DEVELOPMENT DEPARTMENT/
ENGINEERING DIVISION
NEW INSURANCE REGULATIONS

The City of Torrance Community Development Department/Engineering Division will be requiring proof of liability insurance from each contractor applying for a Construction & Excavation permit to work in the public right-of-way or in a public easement beginning October 1, 2001. Insurance shall cover contractor and vehicles used in the construction. The attached requirements dated September 20, 2001 will detail the insurance limits.

All insurance certificates shall have an additional clause that states: ***"The City of Torrance, the City Council and each member thereof, members of boards and commissions, every officer, agent, official, employee and volunteer"*** as additional insured.

Contractors should bring in proof of insurance at the time of application for permit. For major companies that are self-insured, a letter stating this fact and signed by an officer of the firm will be acceptable. Annual insurance may also be kept on file for contractors working periodically within the City of Torrance.

If you have any questions, please contact the Engineering Division Permit Counter at 310-618-5898.

JEFFERY W. GIBSON
Community Development Director
City of Torrance

EFFECTIVE 8/11/03

8/11/03

CITY OF TORRANCE
COMMUNITY DEVELOPMENT DEPARTMENT/
ENGINEERING DIVISION

PERMIT APPLICATION FORM
INSURANCE REQUIREMENTS

Any entity performing work on City streets, right-of-way, and property must comply with the following requirements.

1. TYPE OF INSURANCE

Any entity performing work must maintain at their sole expense the following insurance, which shall be full coverage not subject to self-insurance provisions.

- General Liability including coverage for premises, products and completed operations, underground hazards, independent contractors, personal injury and contractual obligations with combined single limits of at least $1,000,000 per occurrence.
- Automobile Liability, including owned, non-owned and hired vehicles, with at least the following limits of liability:
  - Primary Bodily Injury with limits of at least $500,000 per person, $1,000,000 per occurrence AND; Primary Property Damage with limits of at least $500,000per occurrence, OR
  - Combined single limits of at least $1,000,000 per occurrence.
- Workers' Compensation with limits as required by the State of California and Employer's Liability with limits of at least $1,000,000.

2. CERTIFICATES

- Certificates or an attached endorsement must be provided that contains the following provisions:
  - The City of Torrance, the City Council and each member thereof, members of boards and commissions, every officer, agent, official, employee and volunteer must be named as additional insured under the automobile and general liability policies.
  - The insurance policies required by this clause shall contain a provision that no termination, cancellation or change of coverage can be made without 30 days written notice to the City.

3. FILING REQUIREMENTS

- Certificates of insurance and/or endorsements must be provided to the Community Development Department, Permits and Records Section, 3031 Torrance Blvd., Torrance, CA 90503, prior to the issuance of the permit.

4. ADDITIONAL REQUIREMENT

- Insurance required of any entity performing work will be satisfactory only if issued by companies rated "B+" or better in the most recent edition of Best's Key Rating Guide, and only if they are of a financial category of a VII or better, unless these requirements are modified or waived by the City's Risk Manager.

Please call the Business License Office at 310-618-5923 for fee amounts. Payment must be submitted with your application.

FOR OFFICIAL USE ONLY

1. LICENSE NO. | 2. CATEGORY NO.

HOME OCCUPATION | HEALTH PERMIT | S.I.C. CODE

City of Torrance, Revenue Division

Business License Application

3031 Torrance Boulevard, Torrance, California 90503 • 310/618-5828

PART I. APPLICANT TO ANSWER ALL QUESTIONS IN THIS SECTION (print or type)

3. BUSINESS NAME OR DBA | 4. CORPORATE NAME (IF DIFFERENT FROM ABOVE)

5. BUSINESS ADDRESS | SUITE # | CITY | STATE | ZIP

6. MAILING ADDRESS | SUITE # | CITY | STATE | ZIP

7. NATURE OF BUSINESS (state type of business being conducted at this location) | 8. NO. OF PERSONS WORKING AT LOCATION | 9. BUSINESS PHONE

10. NAME OF PERSON MAKING APPLICATION (must be an owner, partner or corporate officer) | 11. TITLE | 12. HOME PHONE

13. RESIDENCE ADDRESS | CITY | STATE | ZIP | 14. DRIVER'S LICENSE NO. | 15. STATE SALES TAX NO.

16. STATE CONTRACTOR'S LICENSE NO. | 17. SQUARE FOOTAGE | 18. SOCIAL SECURITY NO. | 19. FEIN NO. | 20. SEIN NO.

21. OWNERSHIP INFORMATION ☐ PARTNERSHIP ☐ CORPORATION ☐ SOLE OWNERSHIP

NAMES OF OWNER, PARTNERS, OR PRINCIPAL OFFICERS	TITLE	HOME ADDRESS	HOME PHONE

I declare that I am the owner, partner, corporate officer or person with the power of attorney, and I understand if all the information provided above is not the true the business license being applied for may be revoked as outlined in section 31.9.10 of the Torrance Municipal Code.

I am duly authorized to make this application and all of the information provided in this application is true and correct. The business will not provide any service, good or product which is illegal under Federal, State, or Local Laws. I declare under penalty of perjury that the foregoing is true and correct.

SIGNATURE _____ DATE _____

PART II. FOR OFFICIAL USE ONLY

BASIC FEE | APPLICATION SENT FOR ZONING? ☐ YES ☐ NO | PROCESSING FEE | FIRE INSP. FEE | OTHER

PER PERSON FEE | OTHER (cont'd)

PENALTY FEE | HOLD ☐ YES ☐ NO | ENT. FEE | CANCELLATION FEE

RECEIVED BY | DATE | CHECK NO. | BANK NO. | CASH | TOTAL AMOUNT $

This form can be printed from our website at http://www.torrnet.com/416.htm.

APPENDIX II

CITY OF TORRANCE STANDARD PLANS

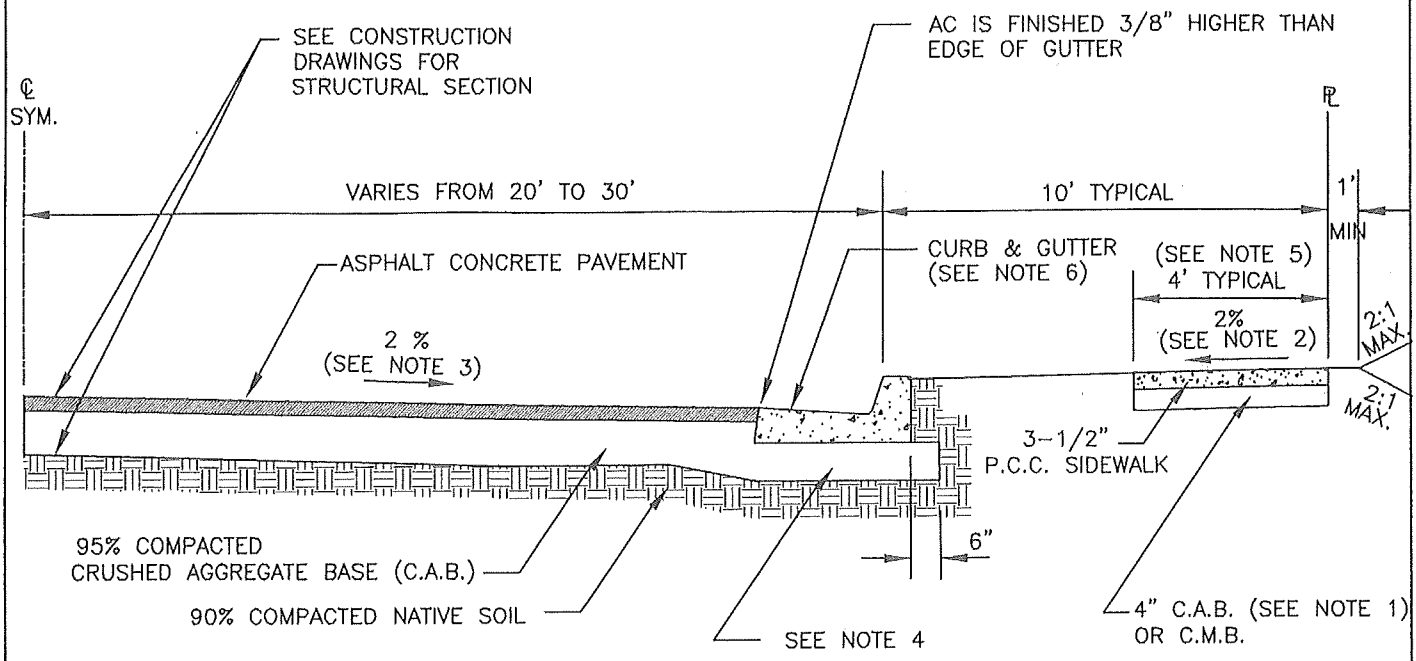

COLLECTOR

NOTES:

1. THE BASE MAY BE OMITTED UNDER SIDEWALK IF SUBGRADE IS SANDY SOIL AND WHEN AUTHORIZED BY THE PUBLIC WORKS INSPECTOR.
2. TYPICAL – MAY VARY 0.5% MIN. TO 2% MAX TO MATCH EXISTING CONDITIONS AND TO FACILITATE JOINS.
3. TYPICAL – MAY VARY 1% MIN. TO 4.0% MAX TO MATCH EXISTING CONDITIONS AND TO FACILITATE JOINS.
4. THICKNESS OF BASE REQUIRED UNDER CURB & GUTTER SHALL BE 8".
5. IF SIDEWALK IS ADJACENT TO CURB, SIDEWALK WIDTH SHALL BE 5' MINIMUM AND HAVE 4' CLEAR AROUND ANY OBSTRUCTION. ALSO SEE T108 AND T109.
6. CURB AND GUTTER AS PER SPPWC STANDARD 120 TYPE A2 UNLESS OTHERWISE NOTED.

CITY OF TORRANCE		
DATE ISSUED DEC 2012	TYPICAL SECTION COLLECTOR AND ARTERIAL STREET ROBERT J. BESTE PUBLIC WORKS DIRECTOR R.C.E. NO. 50737	STANDARD NO. T103 SHEET 1 OF 2

TT/T103-1

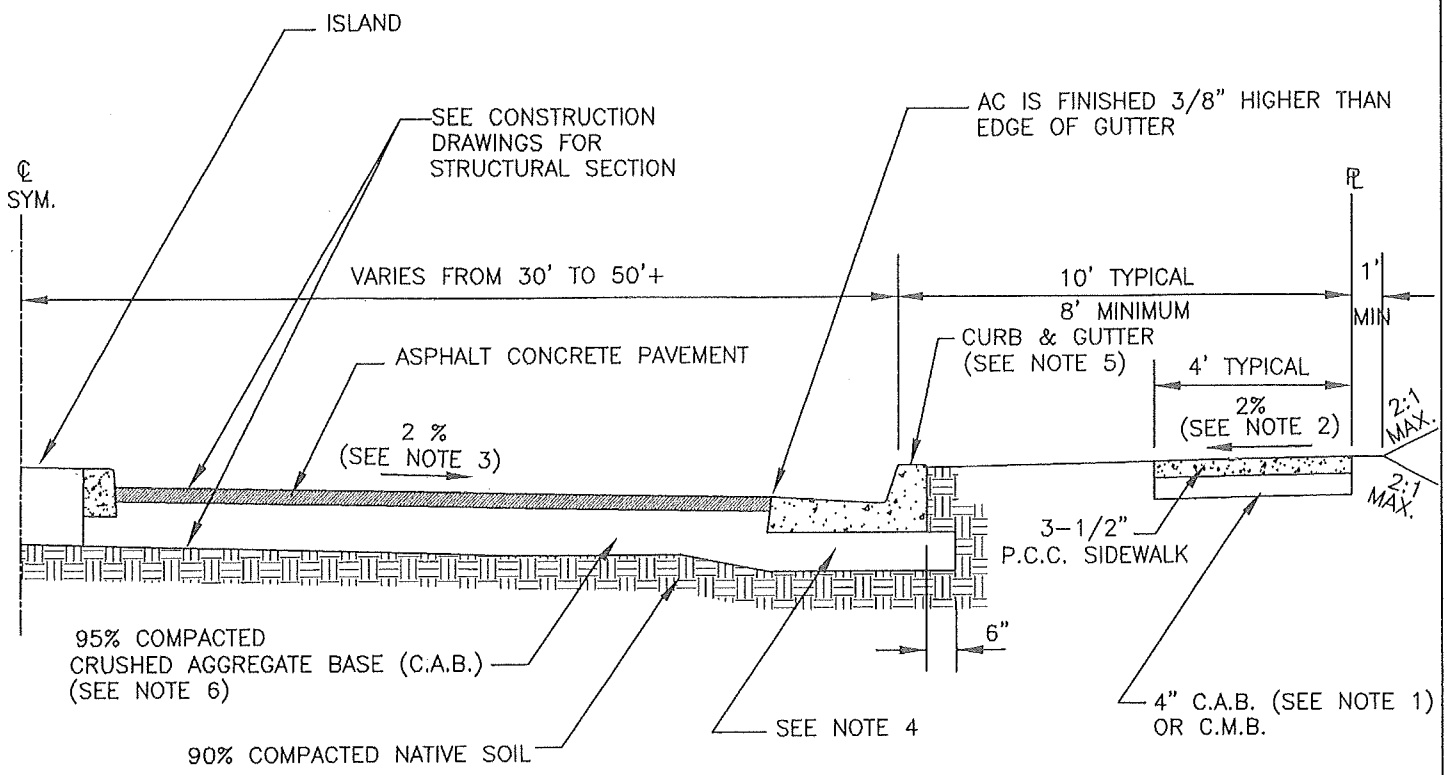

MINOR AND MAJOR ARTERIAL

NOTES:

1. THE BASE MAY BE OMITTED UNDER SIDEWALK IF SUBGRADE IS SANDY SOIL AND WHEN AUTHORIZED BY THE PUBLIC WORKS INSPECTOR.
2. TYPICAL – MAY VARY 0.5% MIN. TO 2% MAX TO MATCH EXISTING CONDITIONS AND TO FACILITATE JOINS.
3. TYPICAL – MAY VARY 1% MIN. TO 4.0% MAX TO MATCH EXISTING CONDITIONS AND TO FACILITATE JOINS.
4. THICKNESS OF BASE REQUIRED UNDER CURB & GUTTER SHALL BE 8".
5. CURB AND GUTTER AS PER SPPWC STANDARD 120 TYPE A2 UNLESS OTHERWISE NOTED.
6. IN CLAY SOILS, EITHER LIME TREAT THE SUBGRADE OR INSTALL GEOTEXTILE MEMBRANE OVER SUBGRADE AND PLACE 12" OF CRUSHED AGGREGATE BASE ON MEMBRANE. GEOTEXTILE MEMBRANE SHALL BE NON-WOVEN AND MEET THE REQUIREMENTS FOR TYPE 250N PER GREEN BOOK SECTION 213-2 GEOSYNTHETICS- TABLE 213-2.2(A)

CITY OF TORRANCE		
DATE ISSUED DEC 2012	TYPICAL SECTION COLLECTOR AND ARTERIAL STREET ROBERT J. BESTE PUBLIC WORKS DIRECTOR R.C.E. NO. 50737	STANDARD NO. T103 SHEET 2 OF 2

TT/T103-2

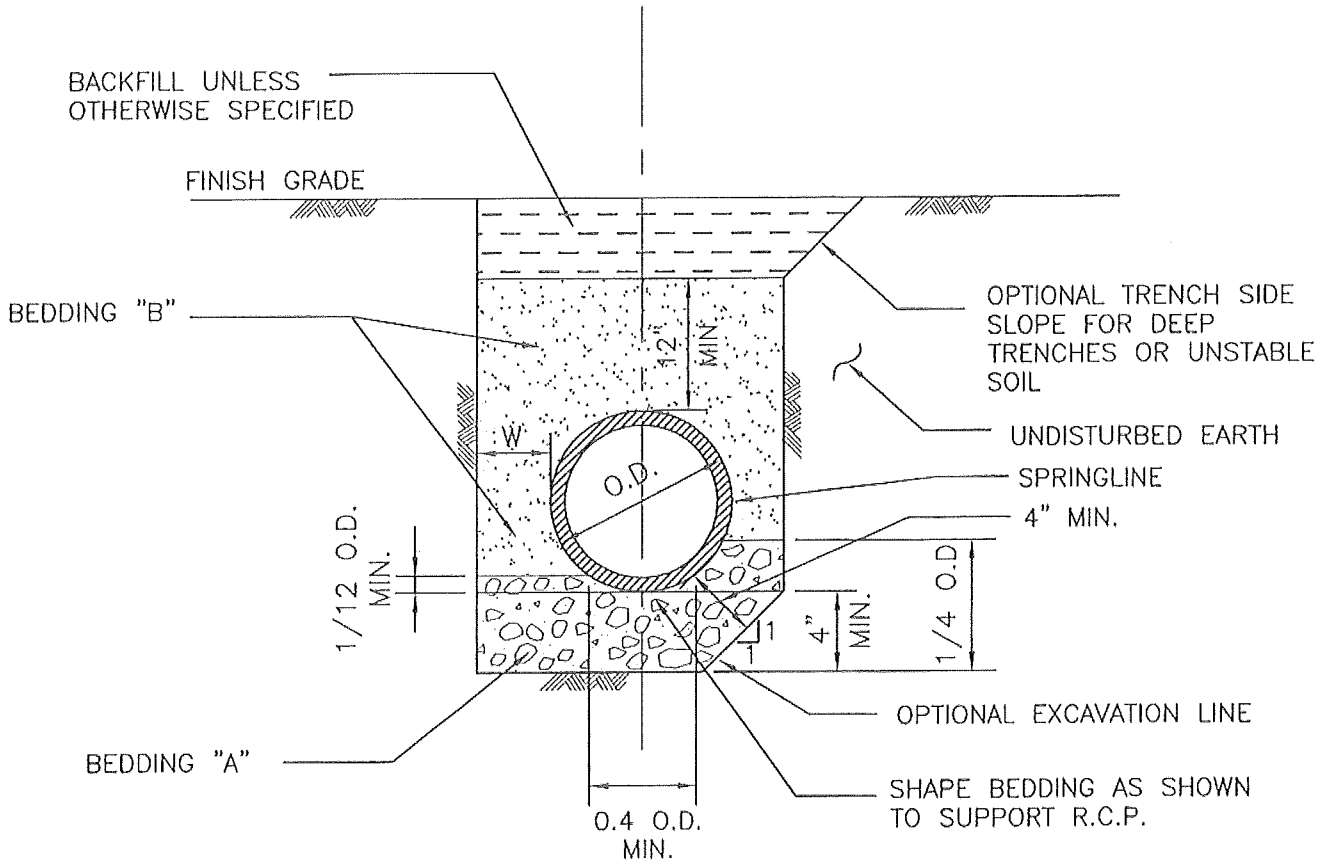

1. BEDDING "A" SHALL BE COMPOSED OF EITHER SAND, NO. 3 OR NO. 4 CRUSHED ROCK OR GRAVEL PER STANDARD SPECIFICATIONS. OTHER GRANULAR MATERIAL WITH A SAND EQUIVALENT OF 30 OR GREATER MAY BE USED WHEN APPROVED BY THE COMMUNITY DEVELOPMENT/PUBLIC WORKS DIRECTOR.

2. BEDDING "B" SHALL BE COMPOSED OF SAND OR OTHER GRANULAR MATERIAL WITH A SAND EQUIVALENT OF 30 OR GREATER AS APPROVED BY THE COMMUNITY DEVELOPMENT/PUBLIC WORKS DIRECTOR AND SHALL CONFORM TO SECTION 306-1.2.1 OF THE STANDARD SPECIFICATIONS, EXCEPT BEDDING FOR PLASTIC PIPE SHOULD CONFORM TO SECTION 306-1.2.13.

3. BEDDING "B" SHALL BE COMPACTED TO A RELATIVE COMPACTION OF NOT LESS THAN 90 PERCENT UNLESS OTHERWISE SPECIFIED.

4. BEDDING "B" SHALL BE PLACED IN TWO OR MORE LIFTS FOR PIPES WITH AN O.D. GREATER THAN 60 INCHES.

CITY OF TORRANCE

DATE ISSUED	BEDDING FOR STORM DRAIN	STANDARD NO.
02 JUL 2008	ROBERT J. BESTE PUBLIC WORKS DIRECTOR R.C.E. NO. 50737	T302
		SHEET 1 OF 2

TT\T302

5. BACKFILL SHALL BE PER SECTION 306-1.3 OF THE STANDARD SPECIFICATIONS.

6. WHERE THE COVER IS 8 FEET OR LESS, "W" MUST BE A MINIMUM OF 6 INCHES. WHERE THE COVER IS GREATER THAN 8 FEET, "W" MUST BE BETWEEN 6 AND 10 INCHES INCLUSIVE FOR PIPES UP TO AND INCLUDING 96 INCHES IN DIAMETER. FOR PIPES OVER 96 INCHES IN DIAMETER, "W" MUST BE BETWEEN 6 AND 12 INCHES INCLUSIVE.

7. "W" SHALL INCLUDE THE THICKNESS OF ANY SHORING.

8. SHORING SHALL BE A MINIMUM OF 6 INCHES FROM THE PIPE AT SPRINGLINE.

APPENDIX III

SPPWC STANDARD PLANS

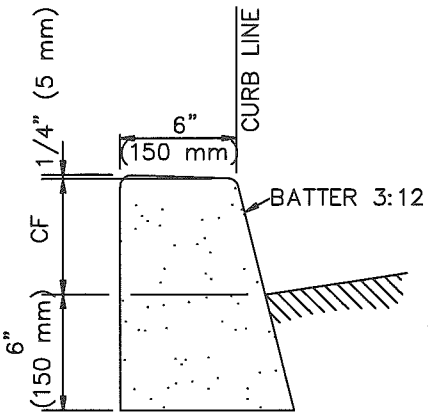

A1–6(150) AND
A1–8(200)

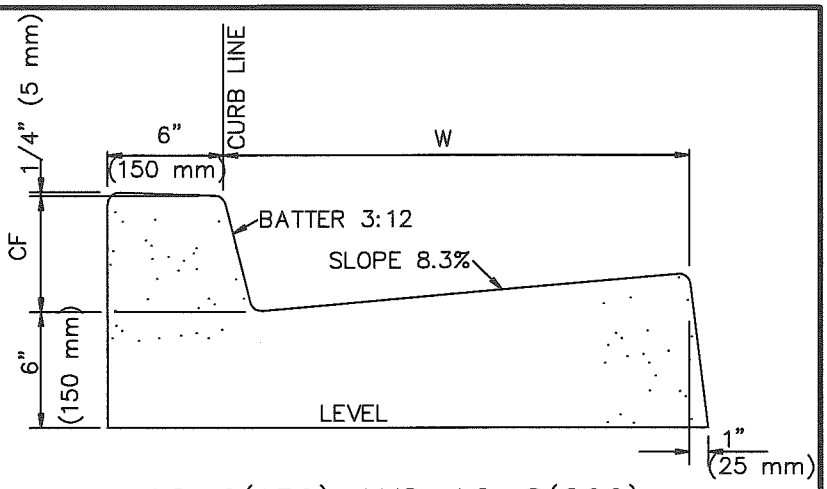

A2–6(150) AND A2–8(200)

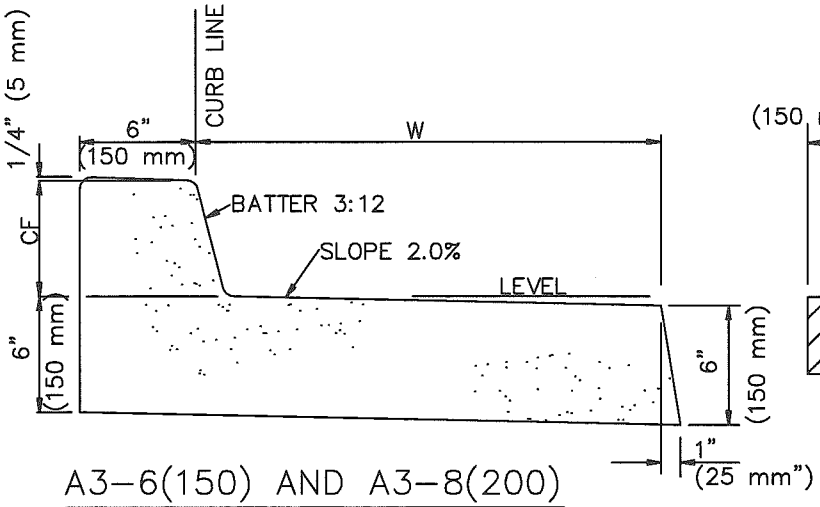

A3–6(150) AND A3–8(200)

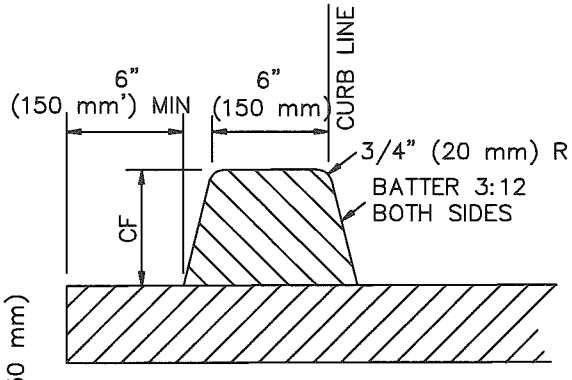

D1–6(150) AND
D1–8(200)

NOTES:

1. THE LAST NUMBER IN THE DESIGNATION IS THE CURB FACE (CF) HEIGHT, INCHES (mm).
2. GUTTER WIDTH, W, IS 24" (600 mm) UNLESS OTHERWISE SPECIFIED.
3. TYPES A1, A2, A3 AND C1 SHALL BE CONSTRUCTED FROM PCC.
4. TYPE D1 CURB SHALL BE CONSTRUCTED FROM ASPHALT CONCRETE.
5. TYPE C1 CURB SHALL BE ANCHORED WITH STEEL DOWELS AS SHOWN OR WITH AN EPOXY APPROVED BY THE ENGINEER.
6. ALL EXPOSED CORNERS ON PCC CURBS AND GUTTERS SHALL BE ROUNDED WITH A 1/2" (15 mm) RADIUS.

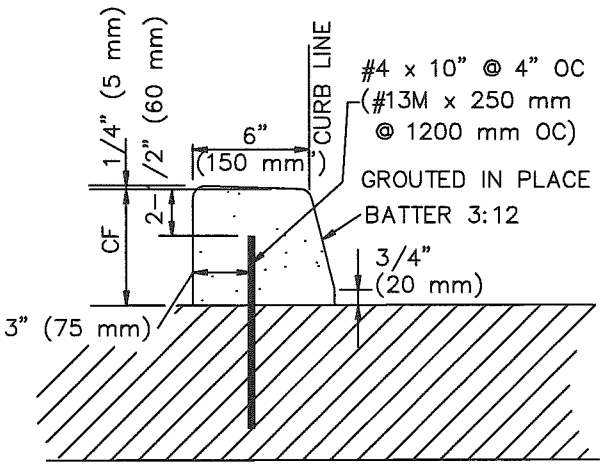

C1–6(150) AND C1–8(200)

STANDARD PLAN FOR PUBLIC WORKS CONSTRUCTION

PROMULGATED BY THE PUBLIC WORKS STANDARDS INC. GREENBOOK COMMITTEE 1984 REV. 1996, 2009

CURB AND GUTTER – BARRIER

USE WITH STANDARD SPECIFICATIONS FOR PUBLIC WORKS CONSTRUCTION

STANDARD PLAN
120–2
SHEET 1 OF 1

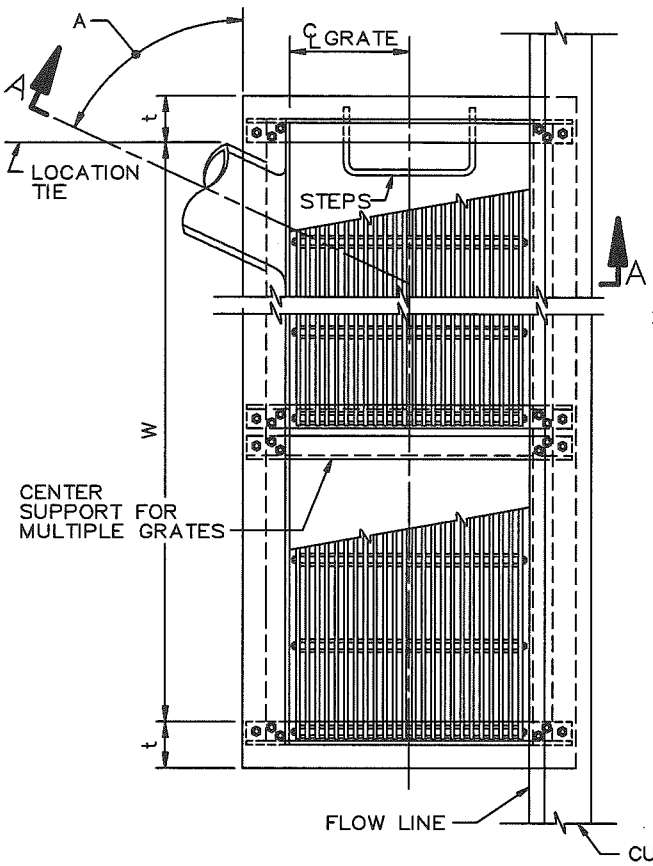

PLAN

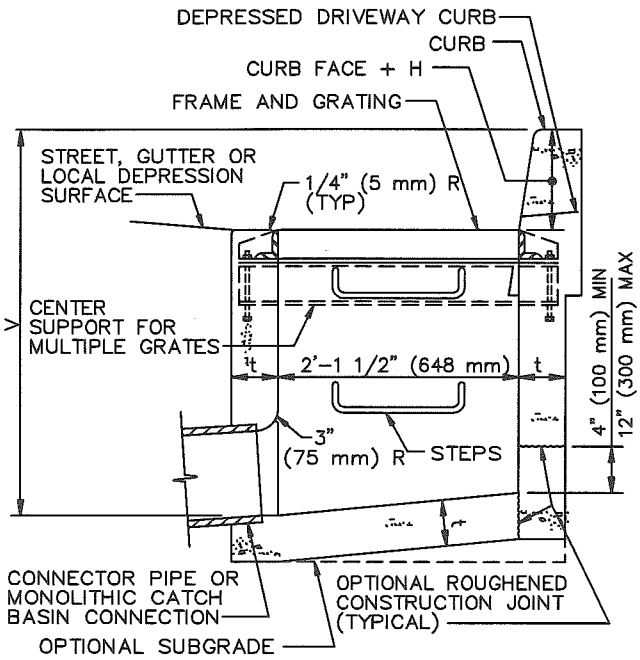

SECTION A–A

STRUCTURAL DATA			
WALL AND SLAB DIMENSIONS AND REINFORCEMENT REQUIREMENTS			
NO. OF GRATES	MAX V	t	REINFORCEMENT FOR WALLS AND SLABS
1–2	4' (1.2 m)	6" (150 mm)	NOT REQUIRED
1–2	8' (2.4 m)	8" (200 mm)	
1–2	10' (3.0 m)	10" (250 mm)	
1–2	12' (3.5 m)	10" (250 mm)	REQUIRED
3–4	4' (1.2 m)	6" (150 mm)	NOT REQUIRED
3–4	7' (2.0 m)	8" (200 mm)	
3–4	8' (2.4 m)	8" (200 mm)	REQUIRED
3–4	12' (3.5 m)	10" (250 mm)	
5–6	4' (1.2 m)	6" (150 mm)	NOT REQUIRED
5–6	6' (1.8 m)	8" (200 mm)	
5–6	8' (2.4 m)	8" (200 mm)	REQUIRED
5–6	12' (3.5 m)	8" (200 mm)	
> 6	4' (1.2 m)	6" (150 mm)	
> 6	8' (2.4 m)	8" (200 mm)	
> 6	12' (3.5 m)	10" (250 mm)	

STANDARD PLANS FOR PUBLIC WORKS CONSTRUCTION

PROMULGATED BY THE PUBLIC WORKS STANDARDS, INC., GREENBOOK COMMITTEE 1984 REV. 1992, 1996, 2009

CURBSIDE GRATING CATCH BASIN

USE WITH STANDARD SPECIFICATIONS FOR PUBLIC WORKS CONSTRUCTION

STANDARD PLAN 303–3

SHEET 1 OF 2

NOTES:

1. SURFACE OF ALL EXPOSED CONCRETE SHALL CONFORM IN SLOPE GRADE, COLOR, FINISH, AND SCORING TO THE EXISTING OR PROPOSED CURB ADJACENT TO THE BASIN.

2. ALL CURVED CONCRETE SURFACES SHALL BE FORMED BY CURVED FORMS, AND SHALL NOT BE SHAPED BY PLASTERING.

3. FLOOR OF BASIN SHALL BE GIVEN A STEEL TROWEL FINISH AND SHALL HAVE A LONGITUDINAL AND LATERAL SLOPE OF 1:12 MINIMUM AND 1:3 MAXIMUM, EXCEPT WHERE THE GUTTER GRADE EXCEEDS 8%, IN WHICH CASE THE LONGITUDINAL SLOPE OF THE FLOOR SHALL BE THE SAME AS THE GUTTER GRADE. SLOPE FLOOR FROM ALL DIRECTIONS TO THE OUTLET.

4. ONE GRATING IS REQUIRED UNLESS OTHERWISE SHOWN ON THE PLANS.

5. DIMENSIONS:

   V = THE DIFFERENCE IN ELEVATION BETWEEN THE TOP OF THE CURB AND THE INVERT OF THE CATCH BASIN AT THE OUTLET = 4.5' (1.35 m).

   V_I = THE DIFFERENCE IN ELEVATION BETWEEN THE TOP OF THE CURB AND THE INVERT AT THE UPSTREAM END OF THE BASIN, AND SHALL BE DETERMINED BY THE REQUIREMENTS OF NOTE 3, BUT SHALL NOT BE LESS THAN CURB FACE PLUS 12" (300 mm).

   V_U = THE DIFFERENCE IN ELEVATION BETWEEN THE TOP OF THE CURB AND THE INVERT AT THE INLET. NOTED ON THE PLANS.

   H = NOTED ON THE PLANS.

   W = 2'–11 3/8" (900 mm) FOR ONE GRATING; ADD 3'–5 3/8" (1051 mm) FOR EACH ADDITIONAL GRATING.

   A = THE ANGLE, IN DEGREES, INTERCEPTED BY THE CENTERLINE OF THE CONNECTOR PIPE AND THE CATCH BASIN WALL TO WHICH THE CONNECTOR PIPE IS ATTACHED.

6. PLACE CONNECTOR PIPES AS INDICATED ON THE PLANS. UNLESS OTHERWISE SPECIFIED, THE CONNECTOR PIPE SHALL BE LOCATED AT THE DOWNSTREAM END OF THE BASIN. WHERE THE CONNECTOR PIPE IS SHOWN AT A CORNER, THE CENTERLINE OF THE PIPE SHALL INTERSECT THE INSIDE CORNER OF THE BASIN. THE PIPE MAY BE CUT AND TRIMMED AT A SKEW NECESSARY TO INSURE MINIMUM 3" (80 mm) PIPE EMBEDMENT, ALL AROUND, WITHIN THE CATCH BASIN WALL, AND 3" (80 mm) RADIUS OF ROUNDING OF STRUCTURE CONCRETE, ALL AROUND, ADJACENT TO PIPE ENDS. A MONOLITHIC CATCH BASIN CONNECTION SHALL BE USED TO JOIN THE CONNECTOR PIPE TO THE CATCH BASIN WHENEVER ANGLE "A" IS LESS THAN 70° OR GREATER THAN 110°, OR WHENEVER THE CONNECTOR PIPE IS LOCATED IN A CORNER. THE OPTIONAL USE OF A MONOLITHIC CATCH BASIN CONNECTION IN ANY CASE IS PERMITTED. MONOLITHIC CATCH BASIN CONNECTIONS MAY BE CONSTRUCTED TO AVOID CUTTING STANDARD LENGTHS OF PIPE.

7. STEPS SHALL BE LOCATED AS SHOWN. IF THE CONNECTOR PIPE INTERFERES WITH THE STEPS, THEY SHALL BE LOCATED AT THE CENTERLINE OF THE DOWNSTREAM GRATING. STEPS SHALL BE SPACED 12" (300 mm) APART. THE TOP STEP SHALL BE 7" (175 mm) BELOW THE TOP OF THE GRATING AND PROJECT 2 1/2" (65 mm). ALL OTHER STEPS SHALL PROJECT 5" (130 mm).

8. THE FOLLOWING SPPWC ARE INCORPORATED HEREIN:
   308 MONOLITHIC CATCH BASIN CONNECTION
   309 CATCH BASIN REINFORCEMENT
   311 FRAME AND GRATING FOR CATCH BASINS
   635 STEEL STEP
   636 POLYPROPYLENE PLASTIC STEP

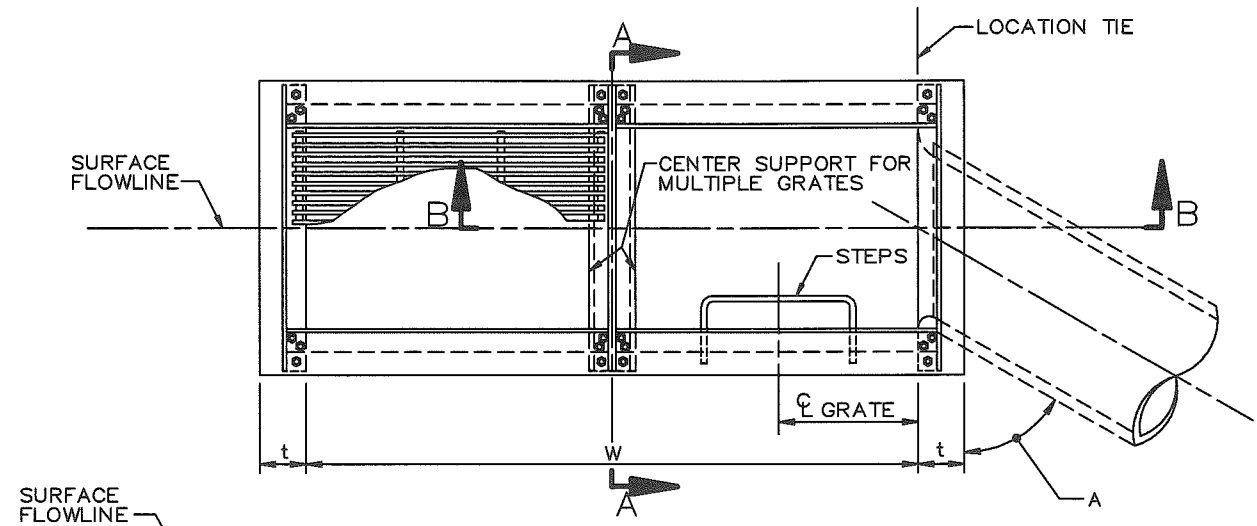

PLAN

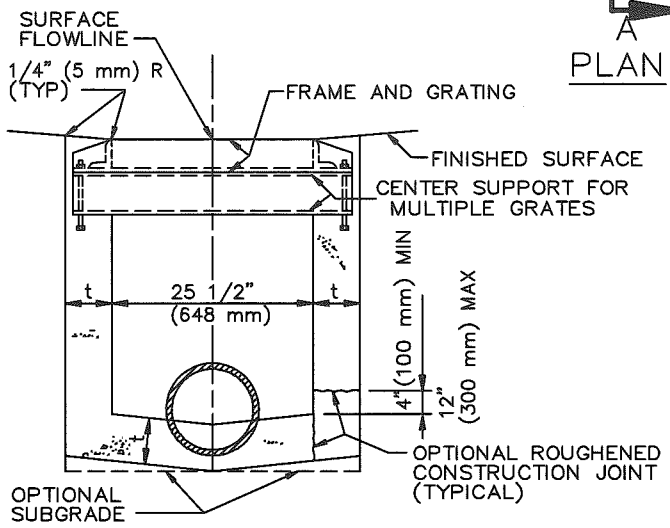

SECTION A–A

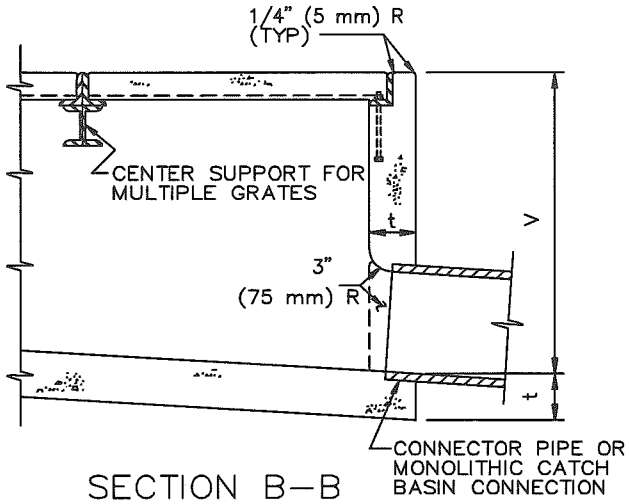

SECTION B–B

STRUCTURAL DATA			
WALL AND SLAB DIMENSIONS AND REINFORCEMENT REQUIREMENTS			
NO. OF GRATES	MAX V	t	REINFORCEMENT FOR WALLS AND SLABS
1–2	4' (1.2 m)	6" (150 mm)	NOT REQUIRED
1–2	8' (2.4 m)	8" (200 mm)	
1–2	10' (3.0 m)	10" (250 mm)	
1–2	12' (3.5 m)	10" (250 mm)	REQUIRED
3–4	4' (1.2 m)	6" (150 mm)	NOT REQUIRED
3–4	7' (2.0 m)	8" (200 mm)	
3–4	8' (2.4 m)	8" (200 mm)	REQUIRED
3–4	12' (3.5 m)	10" (250 mm)	
5–6	4' (1.2 m)	6" (150 mm)	NOT REQUIRED
5–6	6' (1.8 m)	8" (200 mm)	
5–6	8' (2.4 m)	8" (200 mm)	REQUIRED
5–6	12' (3.5 m)	10" (250 mm)	
> 6	4' (1.2 m)	6" (150 mm)	
> 6	8' (2.4 m)	8" (200 mm)	
> 6	12' (3.5 m)	10" (250 mm)	

STANDARD PLANS FOR PUBLIC WORKS CONSTRUCTION

PROMULGATED BY THE PUBLIC WORKS STANDARDS, INC., GREENBOOK COMMITTEE 1984 REV. 1992, 1996, 2009

GRATING CATCH BASIN–ALLEY (LONGITUDINAL)

USE WITH STANDARD SPECIFICATIONS FOR PUBLIC WORKS CONSTRUCTION

STANDARD PLAN 304–3

SHEET 1 OF 2

NOTES:

1. ALL CURVED CONCRETE SURFACES SHALL BE FORMED BY CURVED FORMS, AND SHALL NOT BE SHAPED BY PLASTERING.

2. ONE GRATING IS REQUIRED UNLESS OTHERWISE SHOWN ON THE PLANS.

3. FLOOR OF BASIN SHALL BE GIVEN A STEEL TROWEL FINISH AND SHALL HAVE A LONGITUDINAL AND LATERAL SLOPE OF 1:12 MINIMUM AND 1:3 MAXIMUM, EXCEPT WHERE THE SURFACE GRADE EXCEEDS 8%, IN WHICH CASE THE LONGITUDINAL SLOPE OF THE FLOOR SHALL BE THE SAME AS THE SURFACE GRADE, SLOPE FLOOR FROM ALL DIRECTIONS TO THE OUTLET.

4. DIMENSIONS:

   B = 3'–6" (1.0 m)

   V_U = THE DEPTH AT THE UPSTREAM END OF THE BASIN AND SHALL BE DETERMINED BY THE REQUIREMENTS OF NOTE 3, BUT SHALL NOT BE LESS THAN 2.5' (750 mm).

   V_I = THE DEPTH AT THE INVERT OF THE INLET. NOTED ON THE PLANS.

   W = 2'–11 3/8" (900 mm) FOR ONE GRATING; ADD 3'–5 3/8" (1051 mm) FOR EACH ADDITIONAL GRATING.

   A = THE ANGLE, IN DEGREES, INTERCEPTED BY THE CENTERLINE OF THE CONNECTOR PIPE AND THE CATCH BASIN WALL TO WHICH THE CONNECTOR PIPE IS ATTACHED.

5. PLACE CONNECTOR PIPES AS INDICATED ON THE PLANS. UNLESS OTHERWISE SPECIFIED, THE CONNECTOR PIPE SHALL BE LOCATED AT THE DOWNSTREAM END OF THE BASIN. WHERE THE CONNECTOR PIPE IS SHOWN AT A CORNER, THE CENTERLINE OF THE PIPE SHALL INTERSECT THE INSIDE CORNER OF THE BASIN. THE PIPE MAY BE CUT AND TRIMMED AT A SKEW NECESSARY TO INSURE MINIMUM 3" (80 mm) PIPE EMBEDMENT, ALL AROUND, WITHIN THE CATCH BASIN WALL, AND 3" (75 mm) RADIUS OF ROUNDING OF STRUCTURE CONCRETE, ALL AROUND, ADJACENT TO PIPE ENDS. A MONOLITHIC CATCH BASIN CONNECTION SHALL BE USED TO JOIN THE CONNECTOR PIPE TO THE CATCH BASIN WHENEVER ANGLE "A" IS LESS THAN 70° OR GREATER THAN 110°, OR WHENEVER THE CONNECTOR PIPE IS LOCATED IN A CORNER. THE OPTIONAL USE OF A MONOLITHIC CATCH BASIN CONNECTION IN ANY CASE IS PERMITTED. MONOLITHIC CATCH BASIN CONNECTIONS MAY BE CONSTRUCTED TO AVOID CUTTING STANDARD LENGTHS OF PIPE.

6. STEPS SHALL BE LOCATED AS SHOWN. IF THE CONNECTOR PIPE INTERFERES WITH THE STEPS, THEY SHALL BE LOCATED ON THE OPPOSITE WALL AT THE CENTERLINE OF THE DOWNSTREAM GRATING. STEPS SHALL BE BE SPACED 12" (300 mm) APART. THE TOP STEP SHALL BE 7" (175 mm) BELOW THE TOP OF THE GRATING AND PROJECT 2 1/2" (65 mm). ALL OTHER STEPS SHALL PROJECT 5" (130 mm).

7. THE FOLLOWING SPPWC ARE INCORPORATED HEREIN:
   - 308 MONOLITHIC CATCH BASIN CONNECTION
   - 309 CATCH BASIN REINFORCEMENT
   - 311 FRAME AND GRATING FOR CATCH BASINS
   - 635 STEEL STEP
   - 636 POLYPROPYLENE PLASTIC STEP

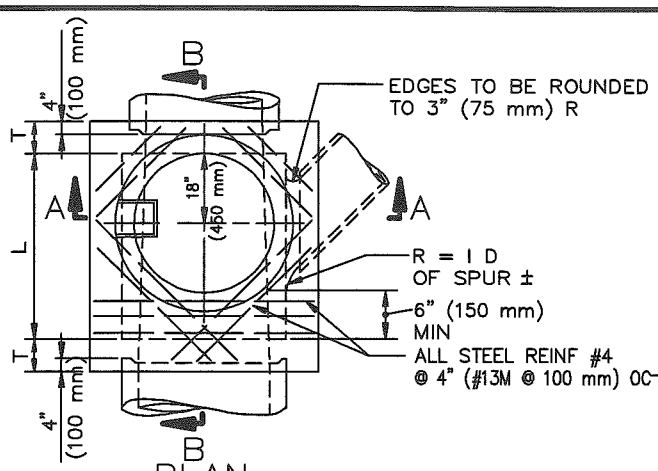

PLAN

(SHAFT NOT SHOWN)

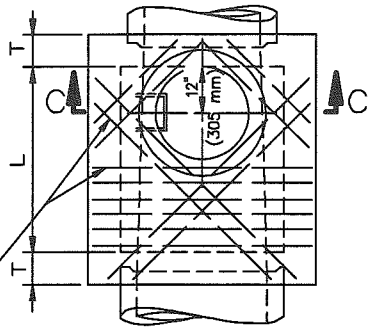

DETAIL "N" PLAN

(RINGS AND COVER NOT SHOWN)

SEE NOTE 1

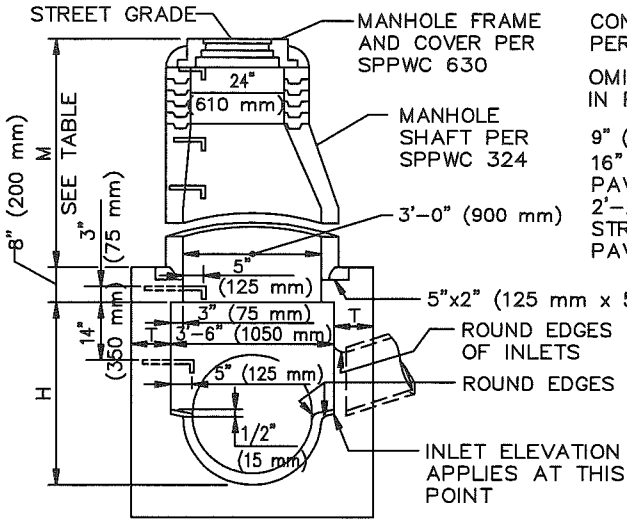

SECTION A–A

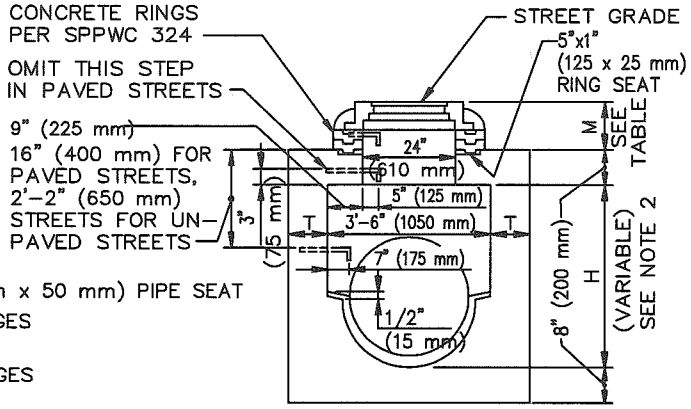

SECTION C–C

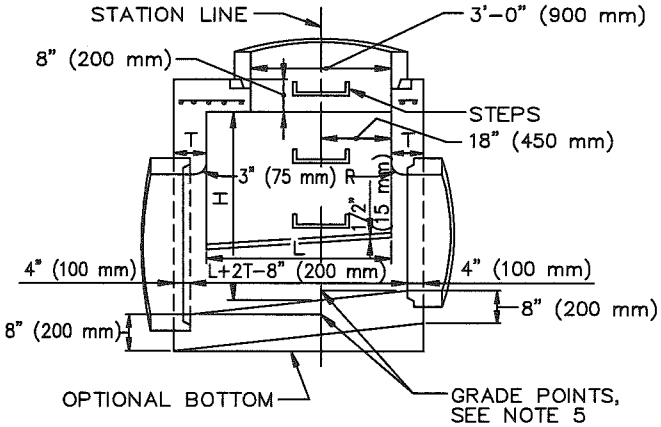

SECTION B–B

TABLE OF VALUES FOR M (SEE NOTE 1)				
SECTION	PAVED STREET		UNPAVED STREET	
	MAX	MIN	MAX	MIN
A–A		2'-10 1/2" (867 mm)		3'-6" (1060 mm)
C–C	11" (282 mm)	8 1/2" (217 mm)	16" (410 mm)	15" (380 mm)

STANDARD PLANS FOR PUBLIC WORKS CONSTRUCTION

PROMULGATED BY THE PUBLIC WORKS STANDARDS INC. GREENBOOK COMMITTEE 1992 REV. 1996, 2009

MANHOLE PIPE–TO–PIPE (ONE OR BOTH MAIN LINE IDS 33" (825 mm) OR SMALLER)

USE WITH STANDARD SPECIFICATIONS FOR PUBLIC WORKS CONSTRUCTION

STANDARD PLAN

321–2

SHEET 1 OF 3

NOTES

1. WHEN DEPTH M FROM STREET GRADE TO THE TOP OF THE BOX IS LESS THAN 2'–10 1/2" (867 mm) FOR PAVED STREETS OR 3'–6" (1060 mm) FOR UNPAVED STREETS, CONSTRUCT SHAFT PER SECTION C–C AND DETAIL "N". DEPTH M MAY BE REDUCED TO AN ABSOLUTE LIMIT OF 6" (150 mm) WHEN LARGER VALUES OF M WOULD REDUCE H IN SECTION C–C TO 3'–6" (1060 mm) OR LESS.

2. H (IN SECTION A–A AND B–B) SHALL NOT BE LESS THAN 4'–0" (1.2 m), BUT MAY BE INCREASED PROVIDED THAT THE VALUE OF M SHALL NOT BE LESS THAN THE MINIMUM SPECIFIED AND THAT THE REDUCER SHALL BE USED. FOR H (IN SECTION C–C) SEE NOTE 1.

3. L SHALL BE 4'–0" (1.2 m) UNLESS OTHERWISE SHOWN. L MAY BE INCREASED OR LOCATION OF MANHOLE SHIFTED TO MEET PIPE ENDS, BUT ANY CHANGE IN LOCATION OF THE SPUR MUST BE APPROVED BY THE ENGINEER.

4. T SHALL BE 8" (200 mm) FOR VALUES OF H UP TO AND INCLUDING 8'–0" (2.4 m) AND 10" (250 mm) FOR VALUES OF H OVER 8'–0" (2.4 m).

5. STATIONS OF MANHOLES SHOWN ON PLANS APPLY AT CENTERLINE OF SHAFT. ELEVATIONS ARE SHOWN AT CENTERLINE OF SHAFT AND REFER TO THE PROLONGED INVERT GRADE LINES. SEE NOTE 3.

6. REINFORCEMENT SHALL CONFORM TO ASTM A 615, GRADE 40 (ASTM A 615M, GRADE 300), AND SHALL TERMINATE 1 1/2" (40 mm) CLEAR OF CONCRETE SURFACES UNLESS OTHERWISE SHOWN.

7. FLOOR OF MANHOLE SHALL BE STEEL TROWELED TO SPRING LINE.

8. BODY OF MANHOLE SHALL BE POURED IN ONE CONTINUOUS OPERATION EXCEPT THAT A CONSTRUCTION JOINT WITH A LONGITUDINAL KEYWAY MAY BE PLACED AT SPRING LINE.

9. THICKNESS OF THE DECK SHALL VARY WHEN NECESSARY TO PROVIDE A LEVEL SEAT BUT SHALL NOT BE LESS THAN 8" (200 mm).

10. STEPS SHALL CONFORM TO SPPWC 635 OR 636. UNLESS OTHERWISE SHOWN, STEPS SHALL BE UNIFORMLY SPACED 14" (350 mm) TO 15" (375 mm) OC. THE LOWEST STEP SHALL NOT BE MORE THAN 24" (600 mm) ABOVE THE LEDGE AT THE SIDE OF THE MANHOLE.

11. THE FOLLOWING CRITERIA SHALL BE USED FOR THIS MANHOLE:

    A. MAIN LINE = 33" (825 mm) INSIDE DIAMETER OR LESS. (EXCEPTION – IF THE MAIN LINE RCP DOWNSTREAM OF THE MANHOLE IS 36" (900 mm) TO 42" (1050 mm) INSIDE DIAMETER AND THE MAIN LINE RCP UPSTREAM IS 33" (825 mm) OR LESS.) SPPWC 320 OR 322 IS NOT APPLICABLE WHERE THE MAIN LINE CONDUIT IS LESS THAN 36" (900 mm) IN DIAMETER.

    B. SEE SECTION A – A. THE MAXIMUM SIZE LATERAL THAT MAY BE CONNECTED TO THIS MANHOLE IS SUCH THAT THE DISTANCE FROM THE OUTSIDE (TOP) OF THE LATERAL TO THE BOTTOM OF THE 8" (200 mm) THICK TOP OF THE MANHOLE CHAMBER, MEASURED VERTICALLY FROM THE END OF THE RCP, SHALL BE A MINIMUM OF 6" (150 mm).

    C. IF THE SIZE OF THE LATERAL IS SUCH THAT THE ABOVE–SPECIFIED MINIMUM DISTANCES CANNOT BE MAINTAINED, THEN ONE OF THE FOLLOWING ALTERNATE SOLUTIONS MUST BE USED.

        1. PROVIDE A SPECIAL STRUCTURE.

        2. PROVIDE TWO STANDARD STRUCTURES, CONSISTING OF THIS MANHOLE PLACED UPSTREAM OR DOWNSTREAM FROM THE APPLICABLE JUNCTION STRUCTURE OR TRANSITION STRUCTURE.

12. MANHOLE FRAME AND COVER SHALL CONFORM TO SPPWC 630 UNLESS OTHERWISE SHOWN.

13. MANHOLE SHAFT SHALL CONFORM TO SPPWC 324 UNLESS OTHERWISE SHOWN.

14. WHERE A MANHOLE SHAFT – 36" (900 mm) WITHOUT REDUCER IS SPECIFIED REFER TO SPPWC 336.

15. WHERE A PRESSURE MANHOLE SHAFT – WITH ECCENTRIC REDUCER IS SPECIFIED REFER TO SPPWC 328.

16. WHERE A PRESSURE MANHOLE SHAFT – 36" (900 mm) WITHOUT REDUCER IS SPECIFIED REFER TO SPPWC 329.

17. THE FOLLOWING SPPWC ARE INCORPORATED HEREIN:
    324 MANHOLE SHAFT – WITH ECCENTRIC REDUCER
    326 MANHOLE SHAFT – 36" (900 mm) WITHOUT REDUCER
    328 PRESSURE MANHOLE SHAFT – WITH ECCENTRIC
    329 PRESSURE MANHOLE SHAFT – 36" (900 mm) WITHOUT REDUCER
    630 24" (610 mm) MANHOLE FRAME AND COVER
    633 36" (900 mm) MANHOLE FRAME AND COVER
    635 STEEL STEP
    636 POLYPROPYLENE PLASTIC STEP

APPENDIX IV

CONSTRUCTION & DEMOLITION WASTE MANAGEMENT PLAN (WMP)

Building Permit Number: _____

CITY OF TORRANCE

Construction & Demolition Waste Management Plan (WMP)

THE REQUIREMENT IS TO REUSE OR RECYCLE AT LEAST 75% OF PROJECT WASTE AND 100% OF EXCAVATED SOIL AND LAND-CLEARING DEBRIS

1) As part of your application, you must complete the front and back of this page and the "estimate" or left side of the table on the backside of this page to the best of your ability, indicating that you will recycle at least 75% of the waste from the project and 100% of excavated soil and land-clearing debris.

2) As your project proceeds, collect and keep receipts of all waste disposed, recycled, reused or donated. Receipts must show material type, weight of material, how the material was treated and the facility used.

3) To final your project, you must then fill out the "actual" or right side of the table on the backside of this sheet, and submit it again with all the receipts to verify that at least 75% of the project's waste and 100% of excavated soil and land-clearing debris was diverted from the landfills.

Please note, if you are contracting with a different company to haul your waste or using a roll off box from another company, that company must have a business license to operate in the City of Torrance.

A COPY OF THIS WMP AND RECEIPTS (SHOWING MATERIAL TYPE, WEIGHT, TREATMENT AND FACILITY USED) FOR ALL RECYCLING AND DISPOSAL SHALL BE SUBMITTED BEFORE THE PROJECT WILL RECEIVE FINAL BUILDING APPROVAL. (FOR DEMO PERMITS, THE RECEIPTS FOR THE DEMOLITION WASTE SHOULD BE PROVIDED BEFORE THE FIRST FOOTING INSPECTION AFTER THE BUILDING PERMIT HAS BEEN ISSUED.)

Project Name: _____

Location: _____

Requesting Infeasibility Exemption: ☐ **Yes** ☐ **No**

Contractor Name: _____ **Contact Name**: _____

Address: _____ **Contact Phone**: _____

Recycler: _____ **Recycler Contact**: _____

Recycler Address: _____ **Recycler Contact Phone**: _____

CITY USE ONLY

	Application (Date)	Final (Date)
Approved		
Further explanation needed (see attached)		
Denied		
Infeasibility Exemption Approved		
Reviewed By		

Submit this form and the attached Waste Management Plan Table to: **WMP Compliance Official**
Alison Sherman, Public Works
asherman@TorranceCA.Gov
Fax: 310-781-6902

For questions or for in-person visit (by appointment only), please call 310-781-

CITY OF TORRANCE

Construction & Demolition Waste Management Plan Table

Project Name: _____

Total Estimated Waste Generated by Project: _____ (in tons).
(Ask your hauler, recycler or site cleanup vendor to assist you. Use receipts from your previous jobs for estimates)

Complete and return with Building Permit Application			**Complete and return with receipts prior to final building approval**		
Material Type	Estimated Reused/ Recycled	Estimated Disposed/ Landfilled	Actual Reused/ Recycled	Actual Disposed/ Landfilled	Vendor or Facility Used (Destination)
	(In Tons)	(In Tons)	(In Tons)	(In Tons)	
Asphalt & Concrete					
Bricks/Masonry/Tiles					
Building Materials (doors, windows, fixtures, etc.)					
Cardboard					
Excavated dirt and land-clearing debris					
Dirt					
Landscape Debris (Plant & Tree Trimmings)					
Scrap Metal					
Unpainted Wood & Pallets					
Other (painted wood & drywall, roofing, etc.)					
Mixed C&D*					
Trash/Garbage					
TOTAL					

If you are requesting an infeasibility exemption and the estimated amount reused/recycled is less than 50%, please explain why (attach additional sheets if necessary):

_____

_____

_____

Prepared by (print): _____ Date: _____

* *Mixed C&D* is defined as a mixture of three or more materials (e.g. wood, drywall, roofing, etc.) from construction or demolition sites that will be taken to a facility capable of recycling those commingled materials.

Signature: _____ Phone Number:_____

Must be signed by Contractor or Owner. Signatory accepts financial responsibility for penalties for non-compliance.

Conversion Rates

The following conversion rates are estimates to help complete the Waste Management Plan by converting materials into tonnage format. The ranges vary widely, depending on how the materials are handled (compacted, loose, chipped, etc.). Use the conversion factors and receipts from any previous projects to help you estimate the potential amount of materials and diversion. Take into consideration the type and load of vehicles that will be used to haul the materials. Ask your hauler or recycler to assist you in estimating these numbers.

Material	Lbs/cy	Tons/cy
Asphalt	1,400 lbs/cy	0.7 tons/cy
Brick	2,430 lbs/cy	1.21 tons/cy
Cardboard	100 lbs/cy	0.05 tons/cy
Concrete	2,600 lbs/cy (Sources range from 1,000 to 4,000)	1.3 tons/cy
Dirt/Soils	2,660 lbs/cy	1.33 tons/cy
Drywall	700 lbs/cy	0.35 tons/cy
Wood (chipped)	300 - 650 lbs/cy	0.15 – 0.3 tons/cy
Mixed C&D Debris	900 lbs/cy	0.45 tons/cy
Mixed Waste/Trash	100 - 350 lbs/cy	0.5 - 0.175 tons/cy

APPENDIX V

Stormwater Pollution Prevention Plan (SWPPP)

STORMWATER POLLUTION PREVENTION PLAN

for

TORRANCE TRANIT PARK & RIDE REGIONAL TERMINAL

RISK LEVEL *1*

Legally Responsible Person [LRP):

City of Torrance
20500 Madrona Avenue
Torrance, CA 90503
Ted Semaan – Engineering Manager
310-781-6900

Project Address:

465 Crenshaw Blvd.
Torrance, CA 90503

SWPPP Prepared by:

Psomas
3111 Camino del Rio North, Suite 720
San Diego, CA 92108
619-961-2800
James S. Bliss, PE, QSD

SWPPP Preparation Date

July 2015

Estimated Project Dates:

Start of Construction	**August 2015**	Completion of Construction	**November 2016**

Table of Contents

Qualified SWPPP Developer **1**

Legally Responsible Person **2**

Amendment Log **3**

Section 1 SWPPP Requirements **4**

1.1 Introduction 4

1.2 Permit Registration Documents 4

1.3 SWPPP Availability and Implementation 5

1.4 SWPPP Amendments 5

1.5 Retention of Records 6

1.6 Required Non-Compliance Reporting 7

1.7 Annual Report 8

1.8 Changes to Permit Coverage 8

1.9 Notice of Termination 8

Section 2 Project Information **9**

2.1 Project and Site Description 9

2.1.1 Site Description 9

2.1.2 Existing Conditions 9

2.1.3 Existing Drainage 9

2.1.4 Geology and Groundwater 10

2.1.5 Project Description 10

2.1.6 Developed Condition 10

2.2 Permits and Governing Documents 11

2.3 Stormwater Run-On from Offsite Areas 11

2.4 Findings of the Construction Site Sediment and Receiving Water Risk Determination 11

2.5 Construction Schedule 12

2.6 Potential Construction Activity and Pollutant Sources 12

2.7 Identification of Non-Stormwater Discharges 13

2.8 Required Site Map Information 13

Section 3 Best Management Practices 15
3.1 Schedule for BMP Implementation 15
3.2 Erosion and Sediment Control 16
3.2.1 Erosion Control 16
3.2.2 Sediment Controls 19
3.3 Non-Stormwater Controls and Waste and Materials Management 22
3.3.1 Non-Stormwater Controls 22
3.3.2 Materials Management and Waste Management 25
3.4 Post construction Stormwater Management Measures 29
Section 4 BMP Inspection and Maintenance 31
4.1 BMP Inspection and Maintenance 31
4.2 Rain Event Action Plans 31
Section 5 Training 32
Section 6 Responsible Parties and Operators 33
6.1 Responsible Parties 33
6.2 Contractor List 34
Section 7 Construction Site Monitoring Program 35
7.1 Purpose 35
7.2 Applicability of Permit Requirements 35
7.3. Weather and Rain Event Tracking 36
7.3.1 Weather Tracking 36
7.3.2 Rain Gauges 36
7.4 Monitoring Locations 36
7.5 Safety and Monitoring Exemptions 36
7.6 Visual Monitoring 37
7.6.1 Routine Observations and Inspections 37
7.6.1.1 Routine BMP Inspections 37
7.6.1.2 Non-Stormwater Discharge Observations 38
7.6.2 Rain-Event Triggered Observations and Inspections 38
7.6.2.1 Visual Observations Prior to a Forecasted Qualifying Rain Event 38
7.6.2.2 BMP Inspections During an Extended Storm Event 38
7.6.2.3 Visual Observations Following a Qualifying Rain Event 39

7.6.3 Visual Monitoring Procedures 39
7.6.4 Visual Monitoring Follow-Up and Reporting 40
7.6.5 Visual Monitoring Locations 40
7.7 Water Quality Sampling and Analysis 41
7.7.1 Sampling and Analysis Plan for Non-Visible Pollutants in Stormwater Runoff Discharges 41
7.7.1.1 Sampling Schedule 43
7.7.1.2 Sampling Locations 43
7.7.1.3 Monitoring Preparation 45
7.7.1.4 Analytical Constituents 45
7.7.1.5 Sample Collection 47
7.7.1.6 Sample Analysis 48
7.7.1.7 Data Evaluation and Reporting 50
7.7.2 Sampling and Analysis Plan for pH and Turbidity in Stormwater Runoff Discharges 50
7.7.2.1 Sampling Schedule 50
7.7.2.2 Sampling Locations 50
7.7.2.3 Monitoring Preparation 50
7.7.2.4 Field Parameters 50
7.7.2.5 Sample Collection 50
7.7.2.6 Field Measurements 50
7.7.2.7 Data Evaluation and Reporting 50
7.7.3 Sampling and Analysis Plan for pH, Turbidity, and SSC in Receiving Water 50
7.7.4 Sampling and Analysis Plan for Non-Stormwater Discharges 51
7.7.4.1 Sampling Schedule 51
7.7.4.2 Sampling Locations 51
7.7.4.3 Monitoring Preparation 51
7.7.4.4 Analytical Constituents 51
7.7.4.5 Sample Collection 51
7.7.4.6 Sample Analysis 51
7.7.4.7 Data Evaluation and Reporting 51
7.7.5 Sampling and Analysis Plan for Other Pollutants Required by the Regional Water Board 52

7.7.5.1 Sampling Schedule 52
7.7.5.2 Sampling Locations 52
7.7.5.3 Monitoring Preparation 52
7.7.5.4 Sample Collection 52
7.7.5.5 Sample Analysis 52
7.7.5.6 Data Evaluation and Reporting 52
7.7.6 Training of Sampling Personnel 52
7.7.7 Sample Collection and Handling 52
7.7.7.1 Sample Collection 52
7.7.7.2 Sample Handling 53
7.7.7.3 Sample Documentation Procedures 54
7.8 Active Treatment System Monitoring 54
7.9 Bioassessment Monitoring 54
7.10 Watershed Monitoring Option 55
7.11 Quality Assurance and Quality Control 55
7.11.1 Field Logs 55
7.11.2 Clean Sampling Techniques 55
7.11.3 Chain of Custody 55
7.11.4 QA/QC Samples 56
7.11.4.1 Field Duplicates 56
7.11.4.2 Equipment Blanks 56
7.11.4.3 Field Blanks 56
7.11.4.4 Travel Blanks 56
7.11.5 Data Verification 57
7.12 Records Retention 58
CSMP Attachment 1: Weather Reports 59
CSMP Attachment 2: Monitoring Records 61
CSMP Attachment 3: Example Forms 63
CSMP Attachment 4: Field Meter Instructions 74
CSMP Attachment 5: Supplemental Information 76
Section 8 References 78
Appendix A: Calculations 79
Appendix B: Site Maps 81

Appendix C: *Permit Registration Documents* 83
Appendix D: *SWPPP Amendment Certifications* 85
Appendix E: *Submitted Changes to PRDs* 88
Appendix F: *Construction Schedule* 90
Appendix G: *Construction Activities, Materials Used, and Associated Pollutants* 92
Appendix H: *CASQA Stormwater BMP Handbook Portal: Construction Fact Sheets* 95
Appendix I: *BMP Inspection Form* 97
Appendix J: *Project Specific Rain Event Action Plan Template* 105
Appendix K: *Training Reporting Form* 109
Appendix L: *Responsible Parties* 111
Appendix M: *Contractors and Subcontractors* 115
Appendix N: *Construction General Permit* 116

Qualified SWPPP Developer

Approval and Certification of the Stormwater Pollution Prevention Plan

Project Name: *TORRANCE TRANSIT PARK & RIDE REGIONAL TERMINAL*

Project Number/ID

"This Stormwater Pollution Prevention Plan and Attachments were prepared under my direction to meet the requirements of the California Construction General Permit (SWRCB Orders No. 2009-009-DWQ as amended by Order 2010-0014-DWQ . I certify that I am a Qualified SWPPP Developer in good standing as of the date signed below."

QSD Signature	7-6-15 *Date*
James S Bliss *QSD Name*	20465 *QSD Certificate Number:*
Civil Engineer *Title and Affiliation*	619-961-2800 *Telephone Number*
jbliss@promas.com *Email*	

Legally Responsible Person

Approval and Certification of the Stormwater Pollution Prevention Plan

Project Name: *TORRANCE TRANSIT PARK & RIDE REGIONAL TERMINAL*

Project Number/ID _____

"I certify under penalty of law that this document and all Attachments were prepared under my direction or supervision in accordance with a system designed to assure that qualified personnel properly gather and evaluate the information submitted. Based on my inquiry of the person or persons who manage the system or those persons directly responsible for gathering the information, to the best of my knowledge and belief, the information submitted is, true, accurate, and complete. I am aware that there are significant penalties for submitting false information, including the possibility of fine and imprisonment for knowing violations."

Signature of Approved Signatory	7-6-15 Date
James S Bliss – Psomas Name of Approved Signatory	619-961-2800 Telephone Number

Amendment Log

Project Name: *TORRANCE TRANSIT PARK & RIDE REGIONAL TERMINAL*

Project Number/ID _____

Amendment No.	Date	Brief Description of Amendment, include section and page number	Prepared and Approved By
			Name: QSD#
			Name: QSD#
			Name: QSD#
			Name: QSD#
			Name: QSD#
			Name: QSD#
			Name: QSD#
			Name: QSD#
			Name: QSD#

Section 1 SWPPP Requirements

1.1 INTRODUCTION

The Torrance Transit Park & Ride Regional Terminal project comprises approximately 15.7 acres and is located at 465 Crenshaw Boulevard in Torrance, California. The property is owned by the City of Torrance and is being developed by the City of Torrance. The projects location is shown on the Site Map in Appendix B.

This Stormwater Pollution Prevention Plan (SWPPP) is designed to comply with California's General Permit for Stormwater Discharges Associated with Construction and Land Disturbance Activities (General Permit) Order No. 2009-0009-DWQ as amended in 2010 and 2012 (NPDES No. CAS000002) issued by the State Water Resources Control Board (State Water Board). This SWPPP has been prepared following the SWPPP Template provided on the California Stormwater Quality Association Stormwater *Best Management Practice Handbook Portal: Construction* (CASQA, 2012). In accordance with the General Permit, Section XIV, this SWPPP is designed to address the following:

- Pollutants and their sources, including sources of sediment associated with construction, construction site erosion and other activities associated with construction activity are controlled;
- Where not otherwise required to be under a Regional Water Quality Control Board (Regional Water Board) permit, all non-stormwater discharges are identified and either eliminated, controlled, or treated;
- Site BMPs are effective and result in the reduction or elimination of pollutants in stormwater discharges and authorized non-stormwater discharges from construction activity to the Best Available Technology/Best Control Technology (BAT/BCT) standard;

Calculations and design details as well as BMP controls for are complete and correct, Appendix A.

1.2 PERMIT REGISTRATION DOCUMENTS

Required Permit Registration Documents (PRDs) shall be submitted to the State Water Board via the Stormwater Multi Application and Report Tracking System (SMARTS) by the Legally Responsible Person (LRP), or authorized personnel (i.e., Approved Signatory) under the direction of the LRP. The project-specific PRDs include:

1. Notice of Intent (NOI);
2. Risk Assessment (Construction Site Sediment and Receiving Water Risk Determination);
3. Site Map;
4. Annual Fee;
5. Signed Certification Statement (LRP Certification is provided electronically with SMARTS PRD submittal); and
6. SWPPP.

Site Maps can be found in Appendix B. A copy of the submitted PRDs shall also be kept in Appendix C along with the Waste Discharge Identification (WDID) confirmation.

1.3 SWPPP AVAILABILITY AND IMPLEMENTATION

The discharger shall make the SWPPP available at the construction site during working hours (see Section 7.5 of CSMP for working hours) while construction is occurring and shall be made available upon request by a State or Municipal inspector. When the original SWPPP is retained by a crewmember in a construction vehicle and is not currently at the construction site, current copies of the BMPs and map/drawing will be left with the field crew and the original SWPPP shall be made available via a request by radio/telephone. (CGP Section XIV.C)

The SWPPP shall be implemented concurrently with the start of ground disturbing activities.

1.4 SWPPP AMENDMENTS

The SWPPP should be revised when:

- There is a General Permit violation.
- When there is a reduction or increase in total disturbed acreage (General Permit Section II Part C).
- BMPs do not meet the objectives of reducing or eliminating pollutants in stormwater discharges.

Additionally, the SWPPP shall be amended when:

- There is a change in construction or operations which may affect the discharge of pollutants to surface waters, groundwater(s), or a municipal separate storm sewer system (MS4);
- There is a change in the project duration that changes the project's risk level; or
- When deemed necessary by the QSD. The QSD has determined that the changes listed in Table 1.1 can be field determined by the QSP. All other changes shall be made by the QSD as formal amendments to the SWPPP.

The following items shall be included in each amendment:

- Who requested the amendment;
- The location of proposed change;
- The reason for change;
- The original BMP proposed, if any; and
- The new BMP proposed.

Amendments shall be logged at the front of the SWPPP and certification kept in Appendix D. The SWPPP text shall be revised replaced, and/or hand annotated as necessary to properly convey the amendment. SWPPP amendments must be made by a QSD. The following changes have been designated by the QSD as "to be field determined" and constitute minor changes that the QSP may implement based on field conditions.

Table 1.1 List of Changes to be Field Determined

Candidate changes for field location or determination by QSP[1]	Check changes that can be field located or field determined by QSP
Increase quantity of an Erosion or Sediment Control Measure	*X*
Relocate/Add stockpiles or stored materials	*X*
Relocate or add toilets	*X*
Relocate vehicle storage and/or fueling locations	*X*
Relocate areas for waste storage	*X*
Relocate water storage and/or water transfer location	*X*
Changes to access points (entrance/exits)	*X*
Change type of Erosion or Sediment Control Measure	*X*
Changes to location of erosion or sediment control	*X*
Minor changes to schedule or phases	*X*
Changes in construction materials	*X*
(1) Any field changes not identified for field location or field determination by QSP must be approved by QSD	

1.5 RETENTION OF RECORDS

Paper or electronic records of documents required by this SWPPP shall be retained for a minimum of three years from the date generated or date submitted, whichever is later, for the following items:

- SWPPP

These records shall be available at the Site until construction is complete. Records assisting in the determination of compliance with the General Permit shall be made available within a reasonable time, to the Regional Water Board, State Water Board or U.S. Environmental Protection Agency (EPA) upon request. Requests by the Regional Water Board for retention of records for a period longer than three years shall be adhered to.

1.6 REQUIRED NON-COMPLIANCE REPORTING

If a General Permit discharge violation occurs the QSP shall immediately notify the LRP. The LRP shall include information on the violation with the Annual Report. Corrective measures will be implemented immediately following identification of the discharge or written notice of non-compliance from the Regional Water Board. Discharges and corrective actions must be documented and include the following items:

- The date, time, location, nature of operation and type of unauthorized discharge.
- The cause or nature of the notice or order.
- The control measures (BMPs) deployed before the discharge event, or prior to receiving notice or order.
- The date of deployment and type of control measures (BMPs) deployed after the discharge event, or after receiving the notice or order, including additional measures installed or planned to reduce or prevent re-occurrence.

1.7 ANNUAL REPORT

The General Permit requires that permittees prepare, certify, and electronically submit an Annual Report no later than September 1st of each year. Reporting requirements are identified in Section XVI of the General Permit. Annual reports will be filed in SMARTS and in accordance with information required by the on-line forms.

1.8 CHANGES TO PERMIT COVERAGE

The General Permit allows for the reduction or increase of the total acreage covered under the General Permit when: a portion of the project is complete and/or conditions for termination of coverage have been met; when ownership of a portion of the project is purchased by a different entity; or when new acreage is added to the project.

Modified PRDs shall be filed electronically within 30 days of a reduction or increase in total disturbed area if a change in permit covered acreage is to be sought. The SWPPP shall be modified appropriately, shall be logged at the front of the SWPPP and cetrification of SWPPP amendments are to be kept in Appendix D. Updated PRDs submitted electronically via SMARTS can be found in Appendix E.

1.9 NOTICE OF TERMINATION

A Notice of Termination (NOT) must be submitted electronically by the LRP via SMARTS to terminate coverage under the General Permit. The NOT must include a final Site Map and representative photographs of the project site that demonstrate final stabilization has been achieved. The NOT shall be submitted within 90 days of completion of construction. The Regional Water Board will consider a construction site complete when the conditions of the General Permit, Section II.D have been met.

Section 2 Project Information

2.1 PROJECT AND SITE DESCRIPTION

2.1.1 Site Description

The Torrance Transit Park & Ride Regional Terminal project site comprises approximately 15.7 acres and is located at 465 Crenshaw Boulevard, in Torrance, California. The project site is located approximately 1 mile south of the San Diego Freeway (405) and 2 miles west of the Harbor Freeway (110). The project site is located approximately 3 miles inland from the Pacific Ocean (Redondo Beach area) and 3 miles west of the Dominguez Channel Estuary, the ultimate receiving water. The project is located at Lat 33.83945N, Long -118.3324 W and is identified on the Site Map in Appendix B.

2.1.2 Existing Conditions

As of the initial date of this SWPPP, the project site is vacant with sparse vegetation. The project site was previously the location of PPG Industries, Inc.'s coatings and resins group facility. Significant environmental investigation and remediation activities have been performed at the site since the facility was closed in 2000. Site-wide soil and groundwater investigation activities were conducted from 2007 through 2008. Based on cursory review of available documents, all soils containing chemicals of concern exceeding regulatory industrial screening levels were excavated and removed from the site in 2009, and any remaining chemicals of concern were determined to not pose an unacceptable health risk.

2.1.3 Existing Drainage

The project site is relatively level sloping on average approximately 0.2% to the north. The elevation of the project site ranges from 70 to 85 feet above mean sea level (msl). Surface drainage at the site currently flows to the north, where it collects and ponds in a low-lying area created as a result of the contaminated soil removals described above. The ponded waters slowly infiltrates into the ground. Stormwater discharges, from the site, are not considered direct discharges, as defined by the State Water Board into the Dominguez Channel. Existing site topography, drainage patterns, and stormwater conveyance systems are shown on the Existing Conditions Plans/Site Preparation Plans prepared by Psomas for the project in Appendix B.

The project discharges to the Dominguez Channel Estuary that is listed for water quality impairment on the most recent 303(d)-list for:

- Ammonia
- Benthic Community Effects
- Benzo(a)pyrene
- Benzo(a)anthracene
- Chlordane (tissue)
- Chrysene

- Coliform Bacteria
- DDT (tissue and sediment)
- Dieldrin (tissue)
- Lead (tissue)
- PCBs
- Phenathrene
- Pyrene
- Zinc (sediment)

2.1.4 Geology and Groundwater

The subsurface soils generally consist of fill material (clay, silty sand, sandy silt) underlain by natural alluvial and eolian deposits. The thickness of the various subsurface materials varies across the site. A geotechnical investigation was performed for the project entitled "Geotechnical Services for Advanced Conceptual Engineering, Torrance Transit Park and Ride Regional Terminal, 465 Crenshaw Boulevard, Torrance, California" dated June 13, 2013 by Diaz Yourman & Associates. Groundwater occurs beneath the site at approximately 85 feet below ground surface. The groundwater gradient is toward the east.

2.1.5 Project Description

Project grading will occur on approximately 9 acres of the project site, which comprises approximately 60 percent of the total site area. The limits of grading are shown on the Civil Grading/Paving/Utility Plans included in Appendix B. Grading will include both cut and fill activities, with the total graded material estimated to be 60,000 cubic yards. Approximately 45,000 cubic yards of fill material will be imported during grading activities. Graded materials are expected to be reused onsite. Soil will be stockpiled in the northwest portion of the site as shown on the Grading/Paving/Utility Plans included in Appendix B. Construction activities will include Rough Grading followed by Finished Grading/Construction.

2.1.6 Developed Condition

Post construction surface drainage for the 5 acre transit station portion of the project will be collected in a series of catch basins and directed to the southeast corner of the site through an underground stormwater conveyance system and will discharge into an existing LA County 72" RCP storm drain at the intersection of Crenshaw Blvd. and Dominguez St. Surface flows from the 1.7 acre surface parking lot and bus drive to the north of the transit station will outlet to the curb and gutter on the south side of the proposed extension of W. 208th St. where it will flow east to Crenshaw Blvd. and then continue north along the west side of the street to the City storm drain system at Del Amo. Flows from the area in the northeast corner of the site, which will be rough graded but left for future Transit Oriented Development, will be directed to a shallow surface retention basin where the flows will pond and infiltrate into the ground.

Post construction drainage patterns and conveyance systems are presented on the Grading/Paving/Utility Plans included in Appendix B.

Table 2.1 Construction Site Estimates

Construction site area	15.7	acres
Percent impervious before construction	0	%
Runoff coefficient before construction	0.30	
Percent impervious after construction	41	%
Runoff coefficient after construction	0.60	

2.2 PERMITS AND GOVERNING DOCUMENTS

In addition to the General Permit, the following documents have been taken into account while preparing this SWPPP

- Regional Water Board requirements
- Basin Plan requirements
- Contract Documents

2.3 STORMWATER RUN-ON FROM OFFSITE AREAS

There is no anticipated offsite run-on to this construction site because the site sits at a high point along Crenshaw Blvd. with all surrounding area sloping away from the site

2.4 FINDINGS OF THE CONSTRUCTION SITE SEDIMENT AND RECEIVING WATER RISK DETERMINATION

A construction site risk assessment has been performed for the project and the resultant risk level is Risk Level 1.

The risk level was determined through the use of a site specific analysis. The risk level is based on project duration, location, proximity to impaired receiving waters and soil conditions. A copy of the Risk Level determination submitted on SMARTS with the PRDs is included in Appendix C.

Table 2.2 and Table 2.3 summarize the sediment and receiving water risk factors and document the sources of information used to derive the factors.

Table 2.2 Summary of Sediment Risk

RUSLE Factor	Value	Method for establishing value
R	35	RUSLE2

Table 2.2 Summary of Sediment Risk

RUSLE Factor	Value	Method for establishing value
K	0.2	EPA
LS	0.06	EPA
Total Predicted Sediment Loss (tons/acre)		**0.42**
Overall Sediment Risk Low Sediment Risk < 15 tons/ acre Medium Sediment Risk >= 15 and < 75 tons/acre High Sediment Risk >= 75 tons/acre		X **Low** ☐ **Medium** ☐ **High**

Runoff from the project site discharges into underground storm drain systems that discharge into the Dominguez Channel Estuary, and eventually into the Pacific Ocean.

Table 2.3 Summary of Receiving Water Risk

Receiving Water Name	303(d) Listed for Sediment Related Pollutant(1)	TMDL for Sediment Related Pollutant(1)	Beneficial Uses of COLD, SPAWN, and MIGRATORY(1)
Dominguez Channel Estuary	☐ Yes X No	☐ Yes X No	☐ Yes X No
Overall Receiving Water Risk			X **Low** ☐ **High**
(1) If yes is selected for any option the Receiving Water Risk is High			

Risk Level 1 sites are subject to the narrative effluent limitations specified in the General Permit. The narrative effluent limitations require stormwater discharges associated with construction activity to minimize or prevent pollutants in stormwater and authorized non-stormwater through the use of controls, structures, and best management practices. This SWPPP has been prepared to address Risk Level 1 requirements (General Permit Attachment C).

2.5 CONSTRUCTION SCHEDULE

The site sediment risk was determined based on construction taking place between August 2015 and November 2016. Modification or extension of the schedule (start and end dates) may affect risk determination and permit requirements. The LRP shall contact the QSD if the schedule changes during construction to address potential impact to the SWPPP. The estimated schedule for planned work can be found in Appendix F.

2.6 POTENTIAL CONSTRUCTION ACTIVITY AND POLLUTANT SOURCES

Appendix G includes a list of construction activities and associated materials that are anticipated to be used onsite. These activities and associated materials will or could potentially contribute pollutants, other than sediment, to stormwater runoff.

The anticipated activities and associated pollutants were used in Section 3 to select the Best Management Practices for the project. Location of anticipated pollutants and associated BMPs are show on the Site Map in Appendix B.

For sampling requirements for non-visible pollutants associated with construction activity please refer to Section 7.7.1. For a full and complete list of onsite pollutants, refer to the Material Safety Data Sheets (MSDS), which are retained onsite at the construction trailer.

2.7 IDENTIFICATION OF NON-STORMWATER DISCHARGES

Non-stormwater discharges consist of discharges which do not originate from precipitation events. The General Permit provides allowances for specified non-stormwater discharges that do not cause erosion or carry other pollutants.

Non-stormwater discharges into storm drainage systems or waterways, which are not authorized under the General Permit and listed in the SWPPP, or authorized under a separate NPDES permit, are prohibited.

Non-stormwater discharges that are authorized from this project site include the following:

- None

Activities at this site that may result in unauthorized non-stormwater discharges include:

- None

Steps will be taken, including the implementation of appropriate BMPs, to ensure that unauthorized discharges are eliminated, controlled, disposed, or treated on-site.

Discharges of construction materials and wastes, such as fuel or paint, resulting from dumping, spills, or direct contact with rainwater or stormwater runoff, are also prohibited.

2.8 REQUIRED SITE MAP INFORMATION

The construction project's Site Map(s) showing the project location, surface water boundaries, geographic features, construction site perimeter and general topography and other requirements identified in Attachment B of the General Permit is located in Appendix B. Table 2.5 identifies Map or Sheet Nos. where required elements are illustrated.

Table 2.5 Required Map Information

Included on Map/Plan Sheet No. (1)	Required Element
	The project's surrounding area (vicinity)
	Site layout
	Construction site boundaries
	Drainage areas
	Discharge locations
	Sampling locations

Table 2.5 Required Map Information

Included on Map/Plan Sheet No. (1)	Required Element
	Areas of soil disturbance (temporary or permanent)
	Active areas of soil disturbance (cut or fill)
	Locations of runoff BMPs
	Locations of erosion control BMPs
	Locations of sediment control BMPs
N/A	ATS location (if applicable)
	Locations of sensitive habitats, watercourses, or other features which are not to be disturbed
	Locations of all post construction BMPs
	Waste storage areas
	Vehicle storage areas
	Material storage areas
	Entrance and Exits
	Fueling Locations

Notes: (1) Indicate maps or drawings that information is included on (e.g., Vicinity Map, Site Map, Drainage Plans, Grading Plans, Progress Maps, etc.)

Section 3 Best Management Practices

3.1 SCHEDULE FOR BMP IMPLEMENTATION

Table 3.1 BMP Implementation Schedule

	BMP	Implementation	Duration
Erosion Control	EC-1, Scheduling	Prior to Construction	Entirety of Project
	EC-2, Preservation of Existing Vegetation	Start of Construction	Entirety of Project
	EC-7, Temporary Cover	During Construction	Entirety of Project
Sediment Control	SE-5, Fiber Rolls	Start of Construction	Entirety of Project
	SE-7, Street Sweeping	Start of Construction	Entirety of Project
	SE-10, Storm Drain Inlet Protection	Start of Construction	Entirety of Project
Tracking Control	TC-1, Temporary Construction Entrance/Exit	Prior to Construction	Entirety of Project
Wind Erosion	WE-1, Wind Erosion Control	Start of Construction	As needed

3.2 EROSION AND SEDIMENT CONTROL

Erosion and sediment controls are required by the General Permit to provide effective reduction or elimination of sediment related pollutants in stormwater discharges and authorized non-stormwater discharges from the Site. Applicable BMPs are identified in this section for erosion control, sediment control, tracking control, and wind erosion control.

3.2.1 Erosion Control

Erosion control, also referred to as soil stabilization, consists of source control measures that are designed to prevent soil particles from detaching and becoming transported in stormwater runoff. Erosion control BMPs protect the soil surface by covering and/or binding soil particles.

This construction project will implement the following practices to provide effective temporary and final erosion control during construction:

1. Preserve existing vegetation where required and when feasible.

2. The area of soil disturbing operations shall be controlled such that the Contractor is able to implement erosion control BMPs quickly and effectively.
3. Stabilize non-active areas within 14 days of cessation of construction activities or sooner if stipulated by local requirements.
4. Control erosion in concentrated flow paths by applying erosion control blankets, check dams, erosion control seeding or alternate methods.
5. Prior to the completion of construction, apply permanent erosion control to remaining disturbed soil areas.

Sufficient erosion control materials shall be maintained onsite to allow implementation in conformance with this SWPPP.

The following temporary erosion control BMP selection table indicates the BMPs that shall be implemented to control erosion on the construction site. Fact Sheets for temporary erosion control BMPs are provided in Appendix H.

Table 3.2 Temporary Erosion Control BMPs

CASQA Fact Sheet	BMP Name	Meets a Minimum Requirement[1]	BMP Used		If not used, state reason
			YES	NO	
EC-1	Scheduling	✓	✓		
EC-2	Preservation of Existing Vegetation	✓	✓		
EC-3	Hydraulic Mulch	✓[2]			
EC-4	Hydroseed	✓[2]	✓		
EC-5	Soil Binders	✓[2]			
EC-6	Straw Mulch	✓[2]			
EC-7	Geotextiles and Mats	✓[2]	✓		
EC-8	Wood Mulching	✓[2]			
EC-9	Earth Dike and Drainage Swales	✓[3]			
EC-10	Velocity Dissipation Devices				
EC-11	Slope Drains				
EC-12	Stream Bank Stabilization				
EC-14	Compost Blankets	✓[2]			
EC-15	Soil Preparation-Roughening				
EC-16	Non-Vegetated Stabilization	✓[2]			
WE-1	Wind Erosion Control	✓	✓		
Alternate BMPs Used:					**If used, state reason:**

[1] Applicability to a specific project shall be determined by the QSD.
[2] The QSD shall ensure implementation of one of the minimum measures listed or a combination thereof to achieve and maintain the Risk Level requirements.
[3] Run-on from offsite shall be directed away from all disturbed areas, diversion of offsite flows may require design/analysis by a licensed civil engineer and/or additional environmental permitting

These temporary erosion control BMPs shall be implemented in conformance with the following guidelines and as outlined in the BMP Factsheets provided in Appendix H. If there is a conflict between documents, the Site Map will prevail over narrative in the body of the SWPPP or guidance in the BMP Fact Sheets. Site specific details in the Site Map prevail over standard details included in the Site Map. The narrative in the body of the SWPPP prevails over guidance in the BMP Fact Sheets.

Scheduling

Scheduling will be implemented to schedule construction activities in a manner that minimizes the exposure of disturbed soils to wind, rain, run-on and run-off, and will reduce the discharge of pollutants to the storm drain system. No construction activities shall take place 24 hours prior to potential storm events that may have impact to generate pollution.

Preservation of Existing Vegetation

Preservation of existing vegetation will be implemented in all environmentally sensitive areas within the project limits to ensure protection of vegetation, and other areas where erosion control will be difficult to establish. BMP SE-2 will be applied during all construction activities to control the damage to the existing vegetation.

Hydroseed

All unpaved areas within the limits of grading for this project that will not receive permanent landscaping with this project will be hydroseeded to stabilize those areas.

Geotextiles and Mats

Temporary Cover (Geotextiles and Mats) will be used for protection of small areas in the event of imminent rain. The specific materials will be selected by the WPCM according to the circumstances and the duration of effective coverage that is needed. Supplies will be maintained to handle emergency implementation, and the contractor will be required to keep backup supplies for all of the BMP materials in use.

Wind Erosion Control

Wind erosion control will include the use of watering trucks to control dust generation during windy condition. When water is infeasible, dust suppression materials similar to soil binders will be used to prevent wind-blown dust from transporting soil and sediment toward drainages.

3.2.2 Sediment Controls

Sediment controls are temporary or permanent structural measures that are intended to complement the selected erosion control measures and reduce sediment discharges from active construction areas. Sediment controls are designed to intercept and settle out soil particles that have been detached and transported by the force of water.

The following sediment control BMP selection table indicates the BMPs that shall be implemented to control sediment on the construction site. Fact Sheets for temporary sediment control BMPs are provided in Appendix H.

Table 3.3 Temporary Sediment Control BMPs

CASQA Fact Sheet	BMP Name	Meets a Minimum Requirement[1]	BMP used		If not used, state reason
			YES	NO	
SE-1	Silt Fence	✓[2] [3]			
SE-2	Sediment Basin		✓		
SE-3	Sediment Trap				
SE-4	Check Dams		✓		
SE-5	Fiber Rolls	✓[2][3]	✓		
SE-6	Gravel Bag Berm	✓[3]			
SE-7	Street Sweeping	✓	✓		
SE-8	Sandbag Barrier				
SE-9	Straw Bale Barrier				
SE-10	Storm Drain Inlet Protection	✓ RL2&3	✓		
SE-11	ATS				
SE-12	Manufactured Linear Sediment Controls				
SE-13	Compost Sock and Berm	✓[3]			
SE-14	Biofilter Bags	✓[3]			
TC-1	Stabilized Construction Entrance and Exit	✓	✓		
TC-2	Stabilized Construction Roadway				
TC-3	Entrance Outlet Tire Wash				
Alternate BMPs Used:					**If used, state reason:**

[1] Applicability to a specific project shall be determined by the QSD
[2] The QSD shall ensure implementation of one of the minimum measures listed or a combination thereof to achieve and maintain the Risk Level requirements
[3] Risk Level 2 &3 shall provide linear sediment control along toe of slope, face of slope, and at the grade breaks of exposed slope

These temporary sediment control BMPs shall be implemented in conformance with the following guidelines and in accordance with the BMP Fact Sheets provided in Appendix H. If there is a conflict between documents, the Site Map will prevail over narrative in the body of the SWPPP or guidance in the BMP Fact Sheets. Site specific details in the Site Map prevail over standard details included in the Site Map. The narrative in the body of the SWPPP prevails over guidance in the BMP Fact Sheets.

Sediment Basin

Sediment basins will be constructed, where needed, to allow sediment in silt-laden runoff to settle out before the runoff is released.

Check Dams

Check dams will be installed, where needed, to slow the flow velocity of runoff to prevent erosion and scour and allow sediment to settle out.

Fiber Rolls

Temporary fiber rolls will be installed to reduce the flow velocity, release the runoff as sheet flow and provide removal of sediment from the runoff. Fiber rolls will also be used for inlet protection and as check dams under certain situations. They will be placed on the toe, top, face, and at grade breaks of exposed and erodible slopes to shorten slope length and spread runoff as sheet flow. They will also be installed on the down-slope of exposed soil areas, around temporary stockpiles and along the perimeter of a project. Fiber roll must last for at least one year after installation. Fiber rolls shall be Type 1 or Type 2.

Place fiber roll on slopes at the following spacing unless the plans show a different spacing:

1. 10 feet apart for slopes steeper than 2:1 (horizontal:vertical)
2. 15 feet apart for slopes from 2:1 to 4:1 (horizontal:vertical)
3. 20 feet apart for slopes from 4.1 to 10:1 (horizontal:vertical)
4. 50 feet apart for slopes flatter than 10:1 (horizontal:vertical)

Place fiber roll approximately parallel to slope contour. For any 20 foot section of fiber roll, do not allow the fiber roll to vary more than 5 percent from level.

Gravel Bag Berm

Gravel bag berms will be installed, where appropriate, along slopes to intercept and slow sheet flows and allow sediment to settle out.

Street Sweeping

Street sweeping and vacuuming will be implemented in areas typically in the vicinity of the point of egress, and areas where sediment is tracked from the project site onto public roads by a standard street broom sweeper. At least one sweeper will remain on the job at all times during the period that sweeping work is required. Sweepers shall be self-loading, motorized, and have spray nozzles. Sweepers shall include a vacuuming apparatus. BMP SE-7 will be applied during all construction activities to control tracking of sediments.

Storm Drain Inlet Protection

The Contractor will implement temporary storm drain inlet protection at all drainage inlets within and near the project limits. The Contractor and the RE will determine the appropriate temporary drainage inlet protection to meet conditions around the drainage inlets, which in a manner that will not cause ponding or pose a threat to traffic safety. When no longer required, as determined by the RE, the Contractor will remove this BMP from all locations where implemented.

Stabilized Construction Entrance and Exit

A stabilized construction entrance/exit will be constructed and maintained at construction site entrances and exits at locations shown on the Site Maps and in accordance with the BMP Manual. Additional locations may be required based on actual field conditions and such locations will be determined in the field by the Water Pollution Control Manager and Contractor, with approval from the Resident Engineer.

The site entrance/exit will be stabilized to reduce tracking of sediment as a result of construction traffic. The entrance will be designated and graded to prevent runoff from leaving the site. The entrance will be flared where it meets the existing road to provide an adequate turning radius. Construction entrance/exits should be installed where tracking is a problem, regardless of what activities are occurring. Construction traffic shall be limited to the entrances and exits to minimize the potential for tracking onto adjacent roads. The type of Entrance/Exit shall be Type 1.

3.3 NON-STORMWATER CONTROLS AND WASTE AND MATERIALS MANAGEMENT

3.3.1 Non-Stormwater Controls

Non-stormwater discharges into storm drainage systems or waterways, which are not authorized under the General Permit, are prohibited. Non-stormwater discharges for which a separate NPDES permit is required by the local Regional Water Board are prohibited unless coverage under the separate NPDES permit has been obtained for the discharge. The selection of non-stormwater BMPs is based on the list of construction activities with a potential for non-stormwater discharges identified in Section 2.7 of this SWPPP.

The following non-stormwater control BMP selection table indicates the BMPs that shall be implemented to control sediment on the construction site. Fact Sheets for temporary non-stormwater control BMPs are provided in Appendix H.

Table 3.4 Temporary Non-Stormwater BMPs

CASQA Fact Sheet	BMP Name	Meets a Minimum Requirement[1]	BMP used		If not used, state reason
			YES	NO	
NS-1	Water Conservation Practices	✓	✓		
NS-2	Dewatering Operation				
NS-3	Paving and Grinding Operation		✓		
NS-4	Temporary Stream Crossing				
NS-5	Clear Water Diversion				
NS-6	Illicit Connection/Discharge	✓	✓		
NS-7	Potable Water/Irrigation				
NS-8	Vehicle and Equipment Cleaning	✓	✓		
NS-9	Vehicle and Equipment Fueling	✓	✓		
NS-10	Vehicle and Equipment Maintenance	✓	✓		
NS-11	Pile Driving Operation				
NS-12	Concrete Curing		✓		
NS-13	Concrete Finishing				
NS-14	Material and Equipment Use Over Water				
NS-15	Demolition Removal Adjacent to Water				
NS-16	Temporary Batch Plants				
Alternate BMPs Used:			**If used, state reason:**		

[1] Applicability to a specific project shall be determined by the QSD

Non-stormwater BMPs shall be implemented in conformance with the following guidelines and in accordance with the BMP Fact Sheets provided in Appendix H. If there is a conflict between documents, the Site Map will prevail over narrative in the body of the SWPPP or guidance in the BMP Fact Sheets. Site specific details in the Site Map prevail over standard details included in the Site Map. The narrative in the body of the SWPPP prevails over guidance in the BMP Fact Sheets.

Water Conservation Practices

Water Control and Conservation involves methods and practices for ensuring that water used on the site does not create surface flows capable of carrying pollutants to offsite drainage. All personnel, including sub-contractors, will be instructed on the practical methods of preventing leaks or over-use of watering, and will be required to adhere to the BMP practices.

Paving and Grinding Operation

Paving and Grinding Operations, provides additional measures that are required to prevent release and discharge of materials used in paving internal streets and constructing curb and gutter. Drain inlets shall be protected prior to any sawcutting, grinding, and paving operations. Sawcutting slurry shall be picked up by a vacuum immediately following the cutting. Noticeable tracking and loose asphalt concrete shall be controlled with a sweeper.

Precautions shall be taken to ensure that no asphalt concrete materials are discharged into adjacent drainage paths. Plastic material shall be placed under asphalt concrete paving equipment when not in use, so as to collect any drips and/or leaks. Substances used to coat asphalt trucks and equipment must be non-toxic, and may not contain soap.

The Qualified SWPPP Practitioner (QSP) shall ensure no leaks from thermoplastic striper and pre-heater equipment shut-off valves enter drain inlets, or watercourses during the pre-heating, transferring, and loading of thermoplastic.

Illicit Connection/Discharge

Requires that all personnel be instructed on how to recognize and report improper connections to storm drain systems or discharges that are illegal.

Vehicle and Equipment Fueling

Vehicle and equipment fueling will be strictly applied to prevent any spills or leaks of fuels. Drip pans and trays will be used to catch small spills as they occur, and sorbent materials will be used to clean up any residues. Fueling will generally take place at the designated fueling area within the contractor storage yard, where a flat, impervious surface will be maintained, and containment berms will be used to prevent discharges.

Vehicle and Equipment Maintenance

Vehicle and equipment maintenance provides guidance for preventing spills during maintenance of vehicles or equipment, and for capturing inadvertent spills promptly. Drip pans or trays and sorbents will be kept readily available in the project yard where these activities may occur. When emergency repairs are required at other parts of the site, the spill prevention and control measures will be used on the spot.

Concrete Curing

Concrete curing shall be performed after concrete work. Curing compound shall be applied using a hand-held sprayer. Concrete curing compound and the sprayer shall be kept in a storage container with secondary containment when not in use. During application, the sprayer shall be

held close to the surface being cured, in order to prevent drift. Any excess curing compound shall be collected via a vacuum or absorbent material.

3.3.2 Materials Management and Waste Management

Materials management control practices consist of implementing procedural and structural BMPs for handling, storing and using construction materials to prevent the release of those materials into stormwater discharges. The amount and type of construction materials to be utilized at the Site will depend upon the type of construction and the length of the construction period. The materials may be used continuously, such as fuel for vehicles and equipment, or the materials may be used for a discrete period, such as soil binders for temporary stabilization.

Waste management consist of implementing procedural and structural BMPs for handling, storing and ensuring proper disposal of wastes to prevent the release of those wastes into stormwater discharges.

Materials and waste management pollution control BMPs shall be implemented to minimize stormwater contact with construction materials, wastes and service areas; and to prevent materials and wastes from being discharged off-site. The primary mechanisms for stormwater contact that shall be addressed include:

- Direct contact with precipitation
- Contact with stormwater run-on and runoff
- Wind dispersion of loose materials
- Direct discharge to the storm drain system through spills or dumping
- Extended contact with some materials and wastes, such as asphalt cold mix and treated wood products, which can leach pollutants into stormwater.

A list of construction activities is provided in Section 2.6. The following Materials and Waste Management BMP selection table indicates the BMPs that shall be implemented to handle materials and control construction site wastes associated with these construction activities. Fact Sheets for Materials and Waste Management BMPs are provided in Appendix H.

Table 3.5 Temporary Materials Management BMPs

CASQA Fact Sheet	BMP Name	Meets a Minimum Requirement[1]	BMP used		If not used, state reason
			YES	NO	
WM-01	Material Delivery and Storage	✓	✓		
WM-02	Material Use	✓	✓		
WM-03	Stockpile Management	✓	✓		
WM-04	Spill Prevention and Control	✓	✓		
WM-05	Solid Waste Management	✓	✓		
WM-06	Hazardous Waste Management	✓	✓		
WM-07	Contaminated Soil Management				
WM-08	Concrete Waste Management	✓	✓		
WM-09	Sanitary-Septic Waste Management	✓	✓		
WM-10	Liquid Waste Management				
Alternate BMPs Used:				**If used, state reason:**	

[1] Applicability to a specific project shall be determined by the QSD.

Material management BMPs shall be implemented in conformance with the following guidelines and in accordance with the BMP Fact Sheets provided in Appendix H. If there is a conflict between documents, the Site Map will prevail over narrative in the body of the SWPPP or guidance in the BMP Fact Sheets. Site specific details in the Site Map prevail over standard details included in the Site Map. The narrative in the body of the SWPPP prevails over guidance in the BMP Fact Sheets.

Material Delivery and Storage

Provides methods and practices for ensuring that stored materials are well protected against incursion of rainfall or surface run-on flows. The storage location will be in the project yard, and will provide independent containment with cover for chemicals. Secondary containment will be provided for any hazardous chemicals as required by the General Permit and other Federal and State regulations.

Material Use

Provides guidance for preventing, controlling, and cleaning up spills that may occur during use of construction materials. All personnel will be instructed on these methods and will be required to observe them at all times.

Stockpile Management

Use the following stockpile management procedures:

1. Reduce or eliminate potential water pollution from stockpiled material including soil, paving material, and pressure treated wood.
2. Locate stockpiles:
    a. If within the floodplain, at least 100 feet from concentrated flows of storm water, drainage courses, and inlets unless approved
    b. If outside the floodplain, at least 50 feet from concentrated flows of storm water, drainage courses, and inlets unless approved

Install WPC practices within 15 days or before predicted precipitation, whichever occurs first.

Active and inactive soil stockpiles must be:

1. Covered with soil stabilization measures, plastic sheeting, or geosynthetic fabric
2. Surrounded with a linear sediment barrier

Portland cement concrete rubble, AC, HMA, AC and HMA rubble, aggregate base or aggregate sub-base stockpiles must be:

1. Covered with plastic sheeting, or geosynthetic fabric
2. Surrounded with a linear sediment barrier

Pressure treated wood stockpiles must be:

1. Placed on pallets
2. Covered with impermeable material

Cold mix asphalt concrete stockpiles must be:

1. Placed on an impervious surface
2. Covered with impervious material
3. Protected from run-on and runoff

Use plastic covers when necessary to prevent wind erosion from stockpiles. Other means of dust control, such as spraying of water, shall be done in accordance with the Special Provisions.

Repair or replace linear sediment barriers and covers as needed to keep them functioning properly. If sediment accumulates to 1/3 of the linear sediment barrier height, remove the sediment.

Spill Prevention and Control

The contractor will seal and secure material containers on level ground for proper spill prevention storage. The Contractor will have an ample supply of spill kits available in the construction yard and company trucks onsite to control discharge in the event of a spill. Spill prevention and control measures will be implemented throughout the duration of the project.

Solid Waste Management

The Contractor will accumulate solid waste, consisting primarily of general site litter and construction debris, into a watertight dumpster located within the project yard. The dumpster will be scheduled to be emptied weekly when it becomes full. The WPCM will monitor solid waste storage and disposal procedures on the construction site. The dumpsters will be covered at the end of the work day and prior to a rain event.

Hazardous Waste Management

Use hazardous waste management practices if waste is generated at the job site from the following substances:

1. Petroleum products
2. Asphalt products
3. Concrete curing compound
4. Acids
5. Paints
6. Solvents
7. Emulsified recycling agent
8. Lime
9. Glues and adhesives
10. Materials classified as hazardous by California Code of Regulations, Title 22, Division 4.5; or listed in CFR Title 40, Parts 110, 117, 261, or 302

The WPC Manager must oversee and enforce hazardous waste management practices. Minimize the production of hazardous materials and hazardous waste at the job site. If damaged, repair or replace perimeter controls, containment structures, and covers. If hazardous material levels are

unknown, use a laboratory certified by ELAP under CDPH to sample and test waste to determine safe methods for storage and disposal.

Separate potentially hazardous waste from nonhazardous waste at the job site. Hazardous waste must be handled, stored, and disposed of under California Code of Regulations, Title 22, Division 4.5, Section 66262.34; and in CFR Title 49, Parts 261, 262, and 263.

Store hazardous waste in sealed containers constructed and labeled with the contents and date accumulated under California Code of Regulations, Title 22, Division 4.5; and in CFR Title 49, Parts 172, 173, 178, and 179. Keep hazardous waste containers in temporary containment facilities under "Material Storage" of the Special Provisions.

Furnish containers with adequate storage volume at convenient locations for hazardous waste collection. Do not overfill hazardous waste containers. Do not mix hazardous waste. Do not allow potentially hazardous waste to accumulate on the ground. Store containers of dry waste that are not watertight on pallets. Store hazardous waste away from storm drains, watercourses, moving vehicles, and equipment.

Clean water based or oil based paint from brushes or equipment within a contained area and in a way that does not contaminate soil, watercourses, and storm drain systems. Handle and dispose of the following as hazardous waste: paints, thinners, solvents, residues, and sludges that cannot be recycled or reused. When thoroughly dry, dispose of the following as solid waste: dry latex paint and paint cans, used brushes, rags, absorbent materials, and drop cloths.

Dispose of hazardous waste within 90 days of being generated. Use a licensed hazardous waste transporter to take hazardous waste to a Class I Disposal Site. Submit a copy of uniform hazardous waste manifest forms within 24 hours of transporting hazardous waste.

The WPC Manager must inspect the following daily:

1. Storage areas for hazardous materials and waste
2. Hazardous waste disposal and transporting activities

Concrete Waste Management

The Contractor will use portable concrete washouts during concrete work. The concrete washout will be located on level ground, at least 50 feet from any stream or watercourses. The concrete washout will be emptied or replaced before freeboard decreases to 4 inches or less.

Sanitary-Septic Waste Management

Portable toilets will be maintained by a licensed subcontractor, toilets will be sited on level ground, at least 50 feet from any waterway or drainage system, and they will be secured to prevent being blown over by high winds when needed. Portable toilets will have secondary containment.

3.4 POST CONSTRUCTION STORMWATER MANAGEMENT MEASURES

Post construction BMPs are permanent measures installed during construction, designed to reduce or eliminate pollutant discharges from the site after construction is completed.

This site is located in an area subject to a Phase I or Phase II Municipal Separate Storm Sewer System (MS4) permit approved Stormwater Management Plan. X Yes ☐ No

Post construction runoff reduction requirements have been satisfied through the MS4 program, this project is exempt from provision XIII A of the General Permit.

The following source control post construction BMPs to comply with General Permit Section XIII.B and local requirements have been identified for the site:

- [LIST or State NONE]
- [LIST or State NONE]

A plan for the post construction funding and maintenance of these BMPs has been developed to address at minimum five years following construction. The post construction BMPs that are described above shall be funded and maintained by the City of Torrance. If required, post construction funding and maintenance will be submitted with the NOT.

Section 4 BMP Inspection and Maintenance

4.1 BMP INSPECTION AND MAINTENANCE

The General Permit requires routine weekly inspections of BMPs, along with inspections before, during, and after qualifying rain events. A BMP inspection checklist must be filled out for inspections and maintained on-site with the SWPPP. The inspection checklist includes the necessary information covered in Section 7.6. A blank inspection checklist can be found in Appendix I. Completed checklists shall be kept in CSMP Attachment 2 "Monitoring Records.

BMPs shall be maintained regularly to ensure proper and effective functionality. If necessary, corrective actions shall be implemented within 72 hours of identified deficiencies and associated amendments to the SWPPP shall be prepared by the QSD.

Specific details for maintenance, inspection, and repair of Construction Site BMPs can be found in the BMP Factsheets in Appendix H.

4.2 RAIN EVENT ACTION PLANS

Rain Event Action Plans (REAPs) are not required for Risk Level 1 projects.

Section 5 Training

Appendix L identifies the QSPs for the project. To promote stormwater management awareness specific for this project, periodic training of job-site personnel shall be included as part of routine project meetings (e.g. daily/weekly tailgate safety meetings), or task specific trainings as needed.

The QSP shall be responsible for providing this information at the meetings, and subsequently completing the training logs shown in Appendix K, which identifies the site-specific stormwater topics covered as well as the names of site personnel who attended the meeting. Tasks may be delegated to trained employees by the QSP provided adequate supervision and oversight is provided. Training shall correspond to the specific task delegated including: SWPPP implementation; BMP inspection and maintenance; and record keeping.

Documentation of training activities (formal and informal) is retained in SWPPP Appendix K.

Section 6 Responsible Parties and Operators

6.1 RESPONSIBLE PARTIES

Approved Signatories who are responsible for SWPPP implementation and have authority to sign permit-related documents are listed below. Written authorizations from the LRP for these individuals are provided in Appendix L. The Approved Signatories assigned to this project are:

Name	Title	Phone Number
TBD	TBD	TBD

QSPs identified for the project are identified in Appendix L. The QSP shall have primary responsibility and significant authority for the implementation, maintenance and inspection/monitoring of SWPPP requirements. The QSP will be available at all times throughout the duration of the project. Duties of the QSP include but are not limited to:

- Implementing all elements of the General Permit and SWPPP, including but not limited to:
  - Ensuring all BMPs are implemented, inspected, and properly maintained;
  - Performing non-stormwater and stormwater visual observations and inspections;
  - Performing non-stormwater and storm sampling and analysis, as required;
  - Performing routine inspections and observations;
  - Implementing non-stormwater management, and materials and waste management activities such as: monitoring discharges; general Site clean-up; vehicle and equipment cleaning, fueling and maintenance; spill control; ensuring that no materials other than stormwater are discharged in quantities which will have an adverse effect on receiving waters or storm drain systems; etc.;
- The QSP may delegate these inspections and activities to an appropriately trained employee, but shall ensure adequacy and adequate deployment.
- Ensuring elimination of unauthorized discharges.
- The QSPs shall be assigned authority by the LRP to mobilize crews in order to make immediate repairs to the control measures.
- Coordinate with the Contractor(s) to assure all of the necessary corrections/repairs are made immediately and that the project complies with the SWPPP, the General Permit and approved plans at all times.

- Notifying the LRP or Authorized Signatory immediately of off-site discharges or other non-compliance events.

6.2 CONTRACTOR LIST

Contractor

Name: (TBD)

Title:

Company:

Address:

Phone Number:

Number (24/7):

Section 7 Construction Site Monitoring Program

7.1 Purpose

This Construction Site Monitoring Program was developed to address the following objectives:

1. To demonstrate that the site is in compliance with the Construction General Permit;
2. To determine whether non-visible pollutants are present at the construction site and are causing or contributing to exceedances of water quality objectives;
3. To determine whether immediate corrective actions, additional Best Management Practices (BMP) implementation, or SWPPP revisions are necessary to reduce pollutants in stormwater discharges and authorized non-stormwater discharges;
4. To determine whether BMPs included in the SWPPP are effective in preventing or reducing pollutants in stormwater discharges and authorized non-stormwater discharges.

7.2 Applicability of Permit Requirements

This project has been determined to be a Risk Level 1 project. The General Permit identifies the following types of monitoring as being applicable for a Risk Level 1 project.

Risk Level 1

- Visual inspections of Best Management Practices (BMPs);
- Visual monitoring of the site related to qualifying storm events;
- Visual monitoring of the site for non-stormwater discharges;
- Sampling and analysis of construction site runoff for non-visible pollutants when applicable; and
  Sampling and analysis of construction site runoff as required by the Regional Water

7.3. Weather and Rain Event Tracking

Visual monitoring and inspections requirements of the General Permit are triggered by a qualifying rain event. The General Permit defines a qualifying rain event as any event that produces ½ inch of precipitation. A minimum of 48 hours of dry weather will be used to distinguish between separate qualifying storm events.

7.3.1 Weather Tracking

The QSP should daily consult the National Oceanographic and Atmospheric Administration (NOAA) for the weather forecasts. These forecasts can be obtained at http://www.srh.noaa.gov/. Weather reports should be printed and maintained with the SWPPP in CSMP Attachment 1 "Weather Reports".

7.3.2 Rain Gauges

The QSP shall install one rain gauge(s) on the project site. Locate the gauge in an open area away from obstructions such as trees or overhangs. Mount the gauge on a post at a height of 3 to 5 feet with the gauge extending several inches beyond the post. Make sure that the top of the gauge is level. Make sure the post is not in an area where rainwater can indirectly splash from sheds, equipment, trailers, etc.

The rain gauge(s) shall be read daily during normal site scheduled hours. The rain gauge should be read at approximately the same time every day and the date and time of each reading recorded. Log rain gauge readings in CSMP Attachment 1 "Weather Records". Follow the rain gauge instructions to obtain accurate measurements.

Once the rain gauge reading has been recorded, accumulated rain shall be emptied and the gauge reset.

For comparison with the site rain gauge, the nearest appropriate governmental rain gauge(s) is located at Dominguez Water Company, Carson, CA (www.dominguezrancho.org).

7.4 Monitoring Locations

Monitoring locations are shown on the Site Maps in Appendix B. Monitoring locations are described in the Sections 7.6 and 7.7.

Whenever changes in the construction site might affect the appropriateness of sampling locations, the sampling locations shall be revised accordingly. All such revisions shall be implemented as soon as feasible and the SWPPP amended. Temporary changes that result in a one-time additional sampling location do not require a SWPPP amendment.

7.5 Safety and Monitoring Exemptions

Safety practices for sample collection will be in accordancewith the Contractor's health and safety Plan.

This project is not required to collect samples or conduct visual observations (inspections) under the following conditions:

- During dangerous weather conditions such as flooding and electrical storms.
- Outside of scheduled site business hours.

Scheduled site business hours are anticipated to be: M-F, 7am to 4pm.

If monitoring (visual monitoring or sample collection) of the site is unsafe because of the dangerous conditions noted above then the QSP shall document the conditions for why an exception to performing the monitoring was necessary. The exemption documentation shall be filed in CSMP Attachment 2 "Monitoring Records".

7.6 Visual Monitoring

Visual monitoring includes observations and inspections. Inspections of BMPs are required to identify and record BMPs that need maintenance to operate effectively, that have failed, or that could fail to operate as intended. Visual observations of the site are required to observe storm water drainage areas to identify any spills, leaks, or uncontrolled pollutant sources.

Table 7.1 identifies the required frequency of visual observations and inspections. Inspections and observations will be conducted at the locations identified in Section 7.6.3.

Table 7.1 Summary of Visual Monitoring and Inspections

Type of Inspection	Frequency
Routine Inspections	
BMP Inspections	Weekly[1]
BMP Inspections – Tracking Control	Daily
Non-Stormwater Discharge Observations	Quarterly during daylight hours
Rain Event Triggered Inspections	
Site Inspections Prior to a Qualifying Event	Within 48 hours of a qualifying event [2]
BMP Inspections During an Extended Storm Event	Every 24-hour period of a rain event[3]
Site Inspections Following a Qualifying Event	Within 48 hours of a qualifying event[2]

[1] Most BMPs must be inspected weekly; those identified below must be inspected more frequently.

[2] Inspections are required during scheduled site operating hours.

[3] Inspections are required during scheduled site operating hours regardless of the amount of precipitation on any given day.

7.6.1 Routine Observations and Inspections

Routine site inspections and visual monitoring are necessary to ensure that the project is in compliance with the requirements of the Construction General Permit.

7.6.1.1 Routine BMP Inspections

Inspections of BMPs are conducted to identify and record:

- BMPs that are properly installed;
- BMPs that need maintenance to operate effectively;
- BMPs that have failed; or
- BMPs that could fail to operate as intended.

7.6.1.2 Non-Stormwater Discharge Observations

Each drainage area will be inspected for the presence of or indications of prior unauthorized and authorized non-stormwater discharges. Inspections will record:

- Presence or evidence of any non-stormwater discharge (authorized or unauthorized);
- Pollutant characteristics (floating and suspended material, sheen, discoloration, turbidity, odor, etc.); and
- Source of discharge.

7.6.2 Rain-Event Triggered Observations and Inspections

Visual observations of the site and inspections of BMPs are required prior to a qualifying rain event; following a qualifying rain event, and every 24-hour period during a qualifying rain event. Pre-rain inspections will be conducted after consulting NOAA and determining that a precipitation event with a 50% or greater probability of precipitation has been predicted.

7.6.2.1 Visual Observations Prior to a Forecasted Qualifying Rain Event

Within 48-hours prior to a qualifying event a stormwater visual monitoring site inspection will include observations of the following locations:

- Stormwater drainage areas to identify any spills, leaks, or uncontrolled pollutant sources;
- BMPs to identify if they have been properly implemented;
- Any stormwater storage and containment areas to detect leaks and ensure maintenance of adequate freeboard.

Consistent with guidance from the State Water Resources Control Board, pre-rain BMP inspections and visual monitoring will be triggered by a NOAA forecast that indicates a probability of precipitation of 50% or more in the project area.

7.6.2.2 BMP Inspections During an Extended Storm Event

During an extended rain event BMP inspections will be conducted to identify and record:

- BMPs that are properly installed;
- BMPs that need maintenance to operate effectively;
- BMPs that have failed; or
- BMPs that could fail to operate as intended.

If the construction site is not accessible during the rain event, the visual inspections shall be performed at all relevant outfalls, discharge points, downstream locations. The inspections should record any projected maintenance activities.

7.6.2.3 Visual Observations Following a Qualifying Rain Event

Within 48 hours following a qualifying rain event (0.5 inches of rain) a stormwater visual monitoring site inspection is required to observe:

- Stormwater drainage areas to identify any spills, leaks, or uncontrolled pollutant sources;
- BMPs to identify if they have been properly designed, implemented, and effective;
- Need for additional BMPs;
- Any stormwater storage and containment areas to detect leaks and ensure maintenance of adequate freeboard; and
- Discharge of stored or contained rain water.

7.6.3 Visual Monitoring Procedures

Visual monitoring shall be conducted by the QSP or staff trained by and under the supervision of the QSP.

The name(s) and contact number(s) of the site visual monitoring personnel are listed below and their training qualifications are provided in Appendix K.

Assigned inspector:	Contact phone:
Alternate inspector:	Contact phone:

Stormwater observations shall be documented on the *Visual Inspection Field Log Sheet* (see CSMP Attachment 3 "Example Forms"). BMP inspections shall be documented on the site specific BMP inspection checklist. Any photographs used to document observations will be referenced on stormwater site inspection report and maintained with the Monitoring Records in Attachment 2.

The QSP shall within 2 days of the inspection submit copies of the completed inspection report to Ted Semaan.

The completed reports will be kept in CSMP Attachment 2 "Monitoring Records".

7.6.4 Visual Monitoring Follow-Up and Reporting

Correction of deficiencies identified by the observations or inspections, including required repairs or maintenance of BMPs, shall be initiated and completed as soon as possible.

If identified deficiencies require design changes, including additional BMPs, the implementation of changes will be initiated within 72 hours of identification and be completed as soon as possible. When design changes to BMPs are required, the SWPPP shall be amended to reflect the changes.

Deficiencies identified in site inspection reports and correction of deficiencies will be tracked on the *Inspection Field Log Sheet* or *BMP Inspection Report* and shall be submitted to the QSP and shall be kept in CSMP Attachment 2 "Monitoring Records".

The QSP shall within 2 days of the inspection submit copies of the completed *Inspection Field Log Sheet* or *BMP Inspection Report* with the corrective actions to Ted Semaan.

Results of visual monitoring must be summarized and reported in the Annual Report.

7.6.5 Visual Monitoring Locations

The inspections and observations identified in Sections 7.6.1 and 7.6.2 will be conducted at the locations identified in this section.

BMP locations are shown on the Site Maps in Appendix B.

There are 4 drainage area(s) on the project site and the contractor's yard, staging areas, and storage areas. Drainage area(s) are shown on the Site Maps in Appendix B and Table 7.2 identifies each drainage area by location.

Table 7.2 Site Drainage Areas

Location No.	Location
	As shown on Site Maps

There are 4 stormwater storage or containment area(s) are on the project site. Stormwater storage or containment area(s) are shown on the Site Maps in Appendix B and Table 7.3 identifies each stormwater storage or containment area by location.

Table 7.3 Stormwater Storage and Containment Areas

Location No.	Location
	As shown on Site Maps

There are 2 discharge location(s) on the project site. Site stormwater discharge location(s) are shown on the Site Maps in Appendix B and Table 7.4 identifies each stormwater discharge location.

Table 7.4 Site Stormwater Discharge Locations

Location No.	Location
1	Northeast corner of the site (to Crenshaw Blvd.)
2	Southeast corner of the site (to County 72" storm drain)

7.7 Water Quality Sampling and Analysis

7.7.1 Sampling and Analysis Plan for Non-Visible Pollutants in Stormwater Runoff Discharges

This Sampling and Analysis Plan for Non-Visible Pollutants describes the sampling and analysis strategy and schedule for monitoring non-visible pollutants in stormwater runoff discharges from the project site.

Sampling for non-visible pollutants will be conducted when (1) a breach, leakage, malfunction, or spill is observed; and (2) the leak or spill has not been cleaned up prior to the rain event; and (3) there is the potential for discharge of non-visible pollutants to surface waters or drainage system.

The following construction materials, wastes, or activities, as identified in Section 2.6, are potential sources of non-visible pollutants to stormwater discharges from the project. Storage, use, and operational locations are shown on the Site Maps in Appendix B.

- None

The following existing site features, as identified in Section 2.6, are potential sources of non-visible pollutants to stormwater discharges from the project. Locations of existing site features contaminated with non-visible pollutants are shown on the Site Maps in Appendix B.

- None

The following soil amendments have the potential to change the chemical properties, engineering properties, or erosion resistance of the soil and will be used on the project site. Locations of soil amendment application are shown on the Site Maps in Appendix B.

- None

7.7.1.1 Sampling Schedule

Samples for the potential non-visible pollutant(s) and a sufficiently large unaffected background sample shall be collected during the first two hours of discharge from rain events that result in a sufficient discharge for sample collection. Samples shall be collected during the site's scheduled hours and shall be collected regardless of the time of year and phase of the construction.

Collection of discharge samples for non-visible pollutant monitoring will be triggered when any of the following conditions are observed during site inspections conducted prior to or during a rain event.

- Materials or wastes containing potential non-visible pollutants are not stored under watertight conditions. Watertight conditions are defined as (1) storage in a watertight container, (2) storage under a watertight roof or within a building, or (3) protected by temporary cover and containment that prevents stormwater contact and runoff from the storage area.
- Materials or wastes containing potential non-visible pollutants are stored under watertight conditions, but (1) a breach, malfunction, leakage, or spill is observed, (2) the leak or spill is not cleaned up prior to the rain event, and (3) there is the potential for discharge of non-visible pollutants to surface waters or a storm drain system.
- A construction activity, including but not limited to those in Section 2.6, with the potential to contribute non-visible pollutants (1) was occurring during or within 24 hours prior to the rain event, (2) BMPs were observed to be breached, malfunctioning, or improperly implemented, and (3) there is the potential for discharge of non-visible pollutants to surface waters or a storm drain system.
- Soil amendments that have the potential to change the chemical properties, engineering properties, or erosion resistance of the soil have been applied, and there is the potential for discharge of non-visible pollutants to surface waters or a storm drain system.
- Stormwater runoff from an area contaminated by historical usage of the site has been observed to combine with stormwater runoff from the site, and there is the potential for discharge of non-visible pollutants to surface waters or a storm drain system.

7.7.1.2 Sampling Locations

Sampling locations are based on proximity to planned non-visible pollutant storage, occurrence or use; accessibility for sampling, and personnel safety. Planned non-visible pollutant sampling locations are shown on the Site Maps in Appendix B and include the locations identified in Tables 7.5 through 7.9.

Two sampling location(s) on the project site and the contractor's yard have been identified for the collection of samples of runoff from planned material and waste storage areas and areas where non-visible pollutant producing construction activities are planned.

Table 7.5 Non-Visible Pollutant Sample Locations – Contractors' Yard		
Sample Location Number	**Sample Location Description**	**Sample Location Latitude and Longitude** (Decimal Degrees)
SAP-1	Northeast corner of the site	
SAP-2	Southeast corner of the site	

No sampling locations have been identified for the collection of samples of runoff from drainage areas where soil amendments will be applied that have the potential to affect water quality.

No sampling locations have been identified for the collection of samples of runoff from drainage areas contaminated by historical usage of the site.

Two sampling location(s) has been identified for the collection of an uncontaminated sample of runoff as a background sample for comparison with the samples being analyzed for non-visible pollutants. This location(s) was selected such that the sample will not have come in contact with the operations, activities, or areas identified in Section 7.7.1 or with disturbed soils areas.

Table 7.8 Non-Visible Pollutant Sample Locations – Background (Unaffected Sample)		
Sample Location Number	**Sample Location**	**Sample Location Latitude and Longitude** (Decimal Degrees)
SAP-3	Northeast corner of the site	
SAP-4	Southeast corner of the site	

If a stormwater visual monitoring site inspection conducted prior to or during a storm event identifies the presence of a material storage, waste storage, or operations area with spills or the potential for the discharge of non-visible pollutants to surface waters or a storm drain system that is at a location not listed above and has not been identified on the Site Maps, sampling locations will be selected by the QSP using the same rationale as that used to identify planned locations. Non-visible pollutant sampling locations shall be identified by the QSP on the pre-rain event inspection form prior to a forecasted qualifying rain event.

7.7.1.3 Monitoring Preparation

Non-visible pollutant samples will be collected by:

Contractor	X Yes	☐ No
Consultant	☐ Yes	☐ No
Laboratory	☐ Yes	☐ No

Samples on the project site will be collected by the following contractor sampling personnel:

Name/Telephone Number: TBD

Alternate(s)/Telephone Number: TBD

An adequate stock of monitoring supplies and equipment for monitoring non-visible pollutants will be available on the project site prior to a sampling event. Monitoring supplies and equipment will be stored in a cool temperature environment that will not come into contact with rain or direct sunlight. Sampling personnel will be available to collect samples in accordance with the sampling schedule. Supplies maintained at the project site will include, but are not limited to, clean powder-free nitrile gloves, sample collection equipment, coolers, appropriate number and volume of sample bottles, identification labels, re-sealable storage bags, paper towels, personal rain gear, ice, and *Effluent Sampling Field Log Sheets* and Chain of Custody (CoC) forms, which are provided in CSMP Attachment 3 "Example Forms".

7.7.1.4 Analytical Constituents

Table 7.10 lists the specific sources and types of potential non-visible pollutants on the project site and the water quality indicator constituent(s) for that pollutant.

Table 7.10 Potential Non-Visible Pollutants and Water Quality Indicator Constituents

Common Non-Visible Pollutants and Water Quality Indicator Constituents Worksheet	
General Work Activity/Potential Pollutants	**Water Quality Indicators of Potential Constituents** (Review product literature and Material Safety Data Sheets to confirm potential constituents)
Adhesives	COD, Phenols, SVOCs
Asphalt Work	VOCs
Cleaning	
Acids	pH
Bleaches	Residual chlorine
TSP	Phosphate
Solvents	VOCs, SVOCs
Detergents	MBAS
Concrete / Masonry Work	
Sealant (Methyl methacrylate)	SVOC
Curing compounds	VOCs, SVOCs, pH

Table 7.10 Potential Non-Visible Pollutants and Water Quality Indicator Constituents

Common Non-Visible Pollutants and Water Quality Indicator Constituents Worksheet	
General Work Activity/Potential Pollutants	**Water Quality Indicators of Potential Constituents** (Review product literature and Material Safety Data Sheets to confirm potential constituents)
Ash, slag, sand	pH, Al, Ca, Va, Zn
Drywall	Cu, Al, General Minerals
Framing / Carpentry	
Treated Wood	Cu, Cr, As, Zn
Particle Board	Formaldehyde
Untreated wood	BOD
Grading / Earthworks	
Gypsum / Lime amendments	pH
Contaminated Soil	Constituents specific to known contaminants, check with Laboratory
Heating, Ventilation, Air Conditioning	Freon
Insulation	Al, Zn
Landscaping	
Pesticides / Herbicides	Product dependent, see label and check with Laboratory
Fertilizers	TKN, NO_3, BOD, COD, DOC, Sulfate, NH_3, Phosphate, Potassium
Aluminum sulfate	Al, TDS, Sulfate
Liquid Waste	Constituents specific to known contaminants, check with Laboratory
Painting	
Resins	COD, SVOCs
Thinners	COD, VOCs
Paint strippers	VOCs, SVOCs, metals
Lacquers, varnishes, enamels	COD, VOCs, SVOCs
Sealants	COD
Adhesives	Phenols, SVOCs
Planting / Vegetation Management	
Vegetation stockpiles	BOD
Fertilizers	TKN, NO_3, BOD, COD, DOC, Sulfate, NH_3,

Table 7.10 Potential Non-Visible Pollutants and Water Quality Indicator Constituents

Common Non-Visible Pollutants and Water Quality Indicator Constituents Worksheet	
General Work Activity/Potential Pollutants	**Water Quality Indicators of Potential Constituents** (Review product literature and Material Safety Data Sheets to confirm potential constituents)
	Phosphate, Potassium
Pesticides / Herbicides	Product dependent, see label and check with Laboratory
Plumbing	
Solder, flux, pipe fitting	Cu, Pb, Sn, Zn
Pools and Fountains	Residual chlorine Cu, chloramines
Removal of existing structures	Zn, VOCs, PCBs (see also other applicable activity categories, e.g., grading, painting)
Sanitary Waste Sewer line breaks and Portable Toilets (using clear fluid – blue fluid is visible if discharged)	BOD, Total/Fecal coliform
Soil Preparation / Amendments / Dust Control	
Polymer / Co-polymers	TKN, NO_3, BOD, COD, DOC, Sulfate, Ni
Lignin sulfate	TDS, alkalinity
Psyllium	COD, TOC
Guar / Plant Gums	COD, TOC, Ni
Solid Waste (leakage)	BOD
Utility Line Testing and Flushing	Residual chlorine, chloramines
Vehicle and Equipment Use	
Batteries	Sulfuric acid; Pb, pH

Adapted from Attachment S, Caltrans SWPPP/WPCP Preparation Manual, February 2003, and CASQA Construction BMP Handbook, 2003

7.7.1.5 Sample Collection

Samples of discharge shall be collected at the designated non-visible pollutant sampling locations shown on the Site Maps in Appendix B or in the locations determined by observed breaches, malfunctions, leakages, spills, operational areas, soil amendment application areas, and historical site usage areas that triggered the sampling event.

Grab samples shall be collected and preserved in accordance with the methods identified in the Table, "Sample Collection, Preservation and Analysis for Monitoring Non-Visible Pollutants" provided in Section 7.7.1.6. Only the QSP, or personnel trained in water quality sampling under the direction of the QSP shall collect samples.

Sample collection and handling requirements are described in Section 7.7.7.

7.7.1.6 Sample Analysis

Samples shall be analyzed using the analytical methods identified in the Table 7.11.

Samples will be analyzed by:

Laboratory Name:	TBD
Street Address:	
City, State Zip:	
Telephone Number:	
Point of Contact:	
ELAP Certification Number:	

Samples will be delivered to the laboratory by:

Driven by Contractor	☐ Yes	☐ No
Picked up by Laboratory Courier	☐ Yes	☐ No
Shipped	☐ Yes	☐ No

Table 7.11 Sample Collection, Preservation and Analysis for Monitoring Non-Visible Pollutants

Constituent	Analytical Method	Minimum Sample Volume	Sample Containers	Sample Preservation	Reporting Limit	Maximum Holding Time
VOCs-Solvents	EPA 8260B	3 x 40 mL	VOA-glass	Store at 4° C HCL to pH<2	1 µg/L	14 days
SVOCs	EPA 8270C	1 x 1 L	Glass-Amber	Store at 4° C	10 µg/L	7 days
BOD	EPA 405.1	1 x 500 mL	Polypropylene	Store at 4° C	1 mg/L	48 hours
COD	EPA 410.4	1 x 250 mL	Glass-Amber	Store at 4° C H_2SO_4 to pH<2	5 mg/L	28 days
DO	SM 4500-O G	1 x 250 mL	Glass-Amber	Store at 4° C	Check Lab	8 hours
pH	EPA 150.1	500 ml	Polypropylene	Store at 4° C	Unitless	2 days
Alkalinity	SM 2320B	1 x 250 mL	Polypropylene	Store at 4° C	1 mg/L	14 days
Metals (Al, Sb, As, Ba, Be, Cd, Ca, Cr, Co, Cu, Fe, Pb, Mg, Mn, Mo, Ni, Se, Na, Th, Va, Zn)	EPA 600B/7470A	1 x 250 mL	Polypropylene	Store at 4° C HNO_3 to pH<2	1 mg/L	
Metals (Chromium V)	EPA 7199	1 x 500 mL	Polypropylene	Store at 4° C	1 µg/L	24 hours

Notes:

°C – Degrees Celsius
BOD – Biochemical Oxygen Demand
COD – Chemical Oxygen Demand
DO – Dissolved Oxygen
EPA – Environmental Protection Agency
HCl – Hydrochloric Acid
HNO_3 – Nitric Acid
L – Liter
mg/L - Milliliter
PCB – Polychlorinated Biphenyl
SVOC – Semi-Volatile Organic Compound
SM – Standard Method
H_2SO_4 – Sulfuric Acid
VOA – Volatile Organic Analysis
VOC – Volatile Organic Compound

7.7.1.7 Data Evaluation and Reporting

The QSP shall complete an evaluation of the water quality sample analytical results.

Runoff/downgradient results shall be compared with the associated upgradient/unaffected results and any associated run-on results. Should the runoff/downgradient sample show an increased level of the tested analyte relative to the unaffected background sample, which cannot be explained by run-on results, the BMPs, site conditions, and surrounding influences shall be assessed to determine the probable cause for the increase.

As determined by the site and data evaluation, appropriate BMPs shall be repaired or modified to mitigate discharges of non-visible pollutant concentrations. Any revisions to the BMPs shall be recorded as an amendment to the SWPPP.

The General Permit prohibits the storm water discharges that contain hazardous substances equal to or in excess of reportable quantities established in 40 C.F.R. §§ 117.3 and 302.4. The results of any non-stormwater discharge results that indicate the presence of a hazardous substance in excess of established reportable quantities shall be immediately reported to the Regional Water Board and other agencies as required by 40 C.F.R. §§ 117.3 and 302.4.

Results of non-visible pollutant monitoring shall be reported in the Annual Report.

7.7.2 Sampling and Analysis Plan for pH and Turbidity in Stormwater Runoff Discharges

Sampling and analysis of runoff for pH and turbidity is not required for Risk Level 1 projects.

7.7.3 Sampling and Analysis Plan for pH, Turbidity, and SSC in Receiving Water

This project is not subject to Receiving Water Monitoring.

7.7.4 Sampling and Analysis Plan for Non-Stormwater Discharges

This project is not subject to the non-stormwater sampling and analysis requirements of the General Permit because it is a Risk Level 1 project.

7.7.5 Sampling and Analysis Plan for Other Pollutants Required by the Regional Water Board

The Regional Water Board has not specified monitoring for additional pollutants.

7.7.6 Training of Sampling Personnel

Sampling personnel shall be trained to collect, maintain, and ship samples in accordance with the Surface Water Ambient Monitoring program (SWAMP) 2008 Quality Assurance Program Plan (QAPrP). Training records of designated contractor sampling personnel are provided in Appendix K.

The stormwater sampler(s) and alternate(s) have received the following stormwater sampling training:

Name	Training
	INSERT LIST OF TRAINING COURSES
	INSERT LIST OF TRAINING COURSES

The stormwater sampler(s) and alternates have the following stormwater sampling experience:

Name	Experience
	INSERT LIST OF STORMWATER SAMPLING EXPERIENCE
	INSERT LIST OF STORMWATER SAMPLING EXPERIENCE

7.7.7 Sample Collection and Handling

7.7.7.1 Sample Collection

Samples shall be collected at the designated sampling locations shown on the Site Maps and listed in the preceding sections. Samples shall be collected, maintained and shipped in accordance with the SWAMP 2008 Quality Assurance Program Plan (QAPrP).

Grab samples shall be collected and preserved in accordance with the methods identified in preceding sections.

To maintain sample integrity and prevent cross-contamination, sample collection personnel shall follow the protocols below.

- Collect samples (for laboratory analysis) only in analytical laboratory-provided sample containers;
- Wear clean, powder-free nitrile gloves when collecting samples;
- Change gloves whenever something not known to be clean has been touched;
- Change gloves between sites;
- Decontaminate all equipment (e.g. bucket, tubing) prior to sample collection using a trisodium phosphate water wash, distilled water rinse, and final rinse with distilled water.

(Dispose of wash and rinse water appropriately, i.e., do not discharge to storm drain or receiving water). Do not decontaminate laboratory provided sample containers;

- Do not smoke during sampling events;
- Never sample near a running vehicle;
- Do not park vehicles in the immediate sample collection area (even non-running vehicles);
- Do not eat or drink during sample collection; and
- Do not breathe, sneeze, or cough in the direction of an open sample container.

The most important aspect of grab sampling is to collect a sample that represents the entire runoff stream. Typically, samples are collected by dipping the collection container in the runoff flow paths and streams as noted below.

i. For small streams and flow paths, simply dip the bottle facing upstream until full.
ii. For larger stream that can be safely accessed, collect a sample in the middle of the flow stream by directly dipping the mouth of the bottle. Once again making sure that the opening of the bottle is facing upstream as to avoid any contamination by the sampler.
iii. For larger streams that cannot be safely waded, pole-samplers may be needed to safely access the representative flow.
iv. Avoid collecting samples from ponded, sluggish or stagnant water.
v. Avoid collecting samples directly downstream from a bridge as the samples can be affected by the bridge structure or runoff from the road surface.

Note, that depending upon the specific analytical test, some containers may contain preservatives. These containers should **never** be dipped into the stream, but filled indirectly from the collection container.

SSC samples should be taken as a normal grab sample, where the bottle is submerged facing upstream and filled. SSC samples need to be collected in a separate bottle because the analysis requires the entire volume of the bottle. Do not collect in a larger container and partition into the laboratory sample container.

7.7.7.2 Sample Handling

Turbidity and pH measurements must be conducted immediately. Do not store turbidity or pH samples for later measurement.

Samples for laboratory analysis must be handled as follows. Immediately following sample collection:

- Cap sample containers;
- Complete sample container labels;
- Sealed containers in a re-sealable storage bag;
- Place sample containers into an ice-chilled cooler;
- Document sample information on the *Effluent Sampling Field Log Sheet*; and
- Complete the CoC.

All samples for laboratory analysis must be maintained between 0-6 degrees Celsius during delivery to the laboratory. Samples must be kept on ice, or refrigerated, from sample collection through delivery to the laboratory. Place samples to be shipped inside coolers with ice. Make

sure the sample bottles are well packaged to prevent breakage and secure cooler lids with packaging tape.

Ship samples that will be laboratory analyzed to the analytical laboratory right away. Hold times are measured from the time the sample is collected to the time the sample is analyzed. The General Permit requires that samples be received by the analytical laboratory within 48 hours of the physical sampling (unless required sooner by the analytical laboratory).

Laboratory Name:	
Address:	
City, State Zip:	
Telephone Number:	
Point of Contact:	

7.7.7.3 Sample Documentation Procedures

All original data documented on sample bottle identification labels, *Effluent Sampling Field Log Sheet*, and CoCs shall be recorded using waterproof ink. These shall be considered accountable documents. If an error is made on an accountable document, the individual shall make corrections by lining through the error and entering the correct information. The erroneous information shall not be obliterated. All corrections shall be initialed and dated.

Duplicate samples shall be identified consistent with the numbering system for other samples to prevent the laboratory from identifying duplicate samples. Duplicate samples shall be identified in the Effluent Sampling Field Log Sheet.

Sample documentation procedures include the following:

Sample Bottle Identification Labels: Sampling personnel shall attach an identification label to each sample bottle. Sample identification shall uniquely identify each sample location.

Field Log Sheets: Sampling personnel shall complete the *Effluent Sampling Field Log Sheet* and *Receiving Water Sampling Field Log Sheet* for each sampling event, as appropriate.

Chain of Custody: Sampling personnel shall complete the CoC for each sampling event for which samples are collected for laboratory analysis. The sampler will sign the CoC when the sample(s) is turned over to the testing laboratory or courier.

7.8 Active Treatment System Monitoring

An Active Treatment System (ATS) will be deployed on the site?

☐ Yes X No

This project does not require a project specific Sampling and Analysis Plan for an ATS because deployment of an ATS is not planned.

7.9 Bioassessment Monitoring

This project is not subject to bioassessment monitoring because it is not a Risk Level 3 project.

7.10 Watershed Monitoring Option

This project is not participating in a watershed monitoring option.

7.11 Quality Assurance and Quality Control

An effective Quality Assurance and Quality Control (QA/QC) plan shall be implemented as part of the CSMP to ensure that analytical data can be used with confidence. QA/QC procedures to be initiated include the following:

- Field logs;
- Clean sampling techniques;
- CoCs;
- QA/QC Samples; and
- Data verification.

Each of these procedures is discussed in more detail in the following sections.

7.11.1 Field Logs

The purpose of field logs is to record sampling information and field observations during monitoring that may explain any uncharacteristic analytical results. Sampling information to be included in the field log include the date and time of water quality sample collection, sampling personnel, sample container identification numbers, and types of samples that were collected. Field observations should be noted in the field log for any abnormalities at the sampling location (color, odor, BMPs, etc.). Field measurements for pH and turbidity should also be recorded in the field log. A Visual Inspection Field Log, an Effluent Sampling Field Log Sheet are included in CSMP Attachment 3 "Example Forms".

7.11.2 Clean Sampling Techniques

Clean sampling techniques involve the use of certified clean containers for sample collection and clean powder-free nitrile gloves during sample collection and handling. As discussed in Section 7.7.7, adoption of a clean sampling approach will minimize the chance of field contamination and questionable data results.

7.11.3 Chain of Custody

The sample CoC is an important documentation step that tracks samples from collection through analysis to ensure the validity of the sample. Sample CoC procedures include the following:

- Proper labeling of samples;
- Use of CoC forms for all samples; and
- Prompt sample delivery to the analytical laboratory.

Analytical laboratories usually provide CoC forms to be filled out for sample containers. An example CoC is included in CSMP Attachment 3 "Example Forms".

7.11.4 QA/QC Samples

QA/QC samples provide an indication of the accuracy and precision of the sample collection; sample handling; field measurements; and analytical laboratory methods. The following types of QA/QC will be conducted for this project:

☐ Field Duplicates at a frequency of 1 duplicate minimum per sampling event.
(Required for all sampling plans with field measurements or laboratory analysis)

☐ Equipment Blanks at a frequency of [Insert frequency required by method]
(Only needed if equipment used to collect samples could add the pollutants to sample)

☐ Field Blanks at a frequency of [Insert frequency required by method]
(Only required if sampling method calls for field blanks)

☐ Travel Blanks at a frequency of [Insert frequency required by method]
(Required for sampling plans that include VOC laboratory analysis)

7.11.4.1 Field Duplicates

Field duplicates provide verification of laboratory or field analysis and sample collection. Duplicate samples shall be collected, handled, and analyzed using the same protocols as primary samples. The sample location where field duplicates are collected shall be randomly selected from the discharge locations. Duplicate samples shall be collected immediately after the primary sample has been collected. Duplicate samples must be collected in the same manner and as close in time as possible to the original sample. Duplicate samples shall not influence any evaluations or conclusion.

7.11.4.2 Equipment Blanks

Equipment blanks provide verification that equipment has not introduced a pollutant into the sample. Equipment blanks are typically collected when:

- New equipment is used;
- Equipment that has been cleaned after use at a contaminated site;
- Equipment that is not dedicated for surface water sampling is used; or
- Whenever a new lot of filters is used when sampling metals.

7.11.4.3 Field Blanks

Field blanks assess potential sample contamination levels that occur during field sampling activities. De-ioninzed water field blanks are taken to the field, transferred to the appropriate container, and treated the same as the corresponding sample type during the course of a sampling event.

7.11.4.4 Travel Blanks

Travel blanks assess the potential for cross-contamination of volatile constituents between sample containers during shipment from the field to the laboratory. De-ioninzed water blanks are taken along for the trip and held unopened in the same cooler with the VOC samples.

7.11.5 Data Verification

After results are received from the analytical laboratory, the QSP shall verify the data to ensure that it is complete, accurate, and the appropriate QA/QC requirements were met. Data must be verified as soon as the data reports are received. Data verification shall include:

- Check the CoC and laboratory reports.
  Make sure all requested analyses were performed and all samples are accounted for in the reports.
- Check laboratory reports to make sure hold times were met and that the reporting levels meet or are lower than the reporting levels agreed to in the contract.
- Check data for outlier values and follow up with the laboratory.
  Occasionally typographical errors, unit reporting errors, or incomplete results are reported and should be easily detected. These errors need to be identified, clarified, and corrected quickly by the laboratory. The QSP should especially note data that is an order of magnitude or more different than similar locations, or is inconsistent with previous data from the same location.
- Check laboratory QA/QC results.
  EPA establishes QA/QC checks and acceptable criteria for laboratory analyses. These data are typically reported along with the sample results. The QSP shall evaluate the reported QA/QC data to check for contamination (method, field, and equipment blanks), precision (laboratory matrix spike duplicates), and accuracy (matrix spikes and laboratory control samples). When QA/QC checks are outside acceptable ranges, the laboratory must flag the data, and usually provides an explanation of the potential impact to the sample results.
- Check the data set for outlier values and, accordingly, confirm results and re-analyze samples where appropriate.
  Sample re-analysis should only be undertaken when it appears that some part of the QA/QC resulted in a value out of the accepted range. Sample results may not be discounted unless the analytical laboratory identifies the required QA/QC criteria were not met and confirms this in writing.

Field data including inspections and observations must be verified as soon as the field logs are received, typically at the end of the sampling event. Field data verification shall include:

- Check field logs to make sure all required measurements were completed and appropriately documented;
- Check reported values that appear out of the typical range or inconsistent;
  Follow-up immediately to identify potential reporting or equipment problems, if appropriate, recalibrate equipment after sampling;
- Verify equipment calibrations;
- Review observations noted on the field logs; and
- Review notations of any errors and actions taken to correct the equipment or recording errors.

7.12 Records Retention

All records of stormwater monitoring information and copies of reports (including Annual Reports) must be retained for a period of at least three years from date of submittal or longer if required by the Regional Water Board.

Results of visual monitoring, field measurements, and laboratory analyses must be kept in the SWPPP along with CoCs, and other documentation related to the monitoring.

Records are to be kept onsite while construction is ongoing. Records to be retained include:

- The date, place, and time of inspections, sampling, visual observations, and/or measurements, including precipitation;
- The individual(s) who performed the inspections, sampling, visual observation, and/or field measurements;
- The date and approximate time of field measurements and laboratory analyses;
- The individual(s) who performed the laboratory analyses;
- A summary of all analytical results, the method detection limits and reporting limits, and the analytical techniques or methods used;
- Rain gauge readings from site inspections;
- QA/QC records and results;
- Calibration records;
- Visual observation and sample collection exemption records;
- The records of any corrective actions and follow-up activities that resulted from analytical results, visual observations, or inspections.

CSMP Attachment 1: Weather Reports

CSMP Attachment 2: Monitoring Records

CSMP Attachment 3: Example Forms

Rain Gauge Log Sheet				
Construction Site Name:				
WDID #:				
Date (mm/dd/yy)	Time (24-hr)	Initials	Rainfall Depth (Inches)	Notes:

Risk Level 1, 2, 3
Visual Inspection Field Log Sheet

Date and Time of Inspection:	Report Date:

Inspection Type:	☐ Weekly	☐ Before predicted rain	☐ During rain event	☐ Following qualifying rain event	☐ Contained stormwater release	☐ Quarterly non-stormwater

Site Information

Construction Site Name:	
Construction stage and completed activities:	Approximate area of exposed site:

Weather and Observations

Date Rain Predicted to Occur:	Predicted % chance of rain:

Estimate storm beginning: _____ (date and time)	Estimate storm duration:_____ (hours)	Estimate time since last storm: _____ (days or hours)	Rain gauge reading:_____ (inches)

Observations: If yes identify location		
Odors	Yes ☐	No ☐
Floating material	Yes ☐	No ☐
Suspended Material	Yes ☐	No ☐
Sheen	Yes ☐	No ☐
Discolorations	Yes ☐	No ☐
Turbidity	Yes ☐	No ☐

Site Inspections

Outfalls or BMPs Evaluated	Deficiencies Noted
(add additional sheets or attached detailed BMP Inspection Checklists)	

Photos Taken:	Yes ☐	No ☐	Photo Reference IDs:

Corrective Actions Identified (note if SWPPP/REAP change is needed)

Inspector Information

Inspector Name:	Inspector Title:
Signature:	Date:

Risk Level 2
Effluent Sampling Field Log Sheets

Construction Site Name:	Date:	Time Start:
Sampler:		

Sampling Event Type:	☐ Stormwater	☐ Non-stormwater	☐ Non-visible pollutant

Field Meter Calibration

pH Meter ID No./Desc.: Calibration Date/Time:	Turbidity Meter ID No./Desc.: Calibration Date/Time:

Field pH and Turbidity Measurements

Discharge Location Description	pH	Turbidity	Time

Grab Samples Collected

Discharge Location Description	Sample Type	Time

Additional Sampling Notes:

Time End:

Risk Level 3 ***Effluent Sampling Field Log Sheets***			
Construction Site Name:		Date:	Time Start:
Sampler:			
Sampling Event Type:	☐ Stormwater	☐ Non-stormwater	☐ Non-visible pollutant

Field Meter Calibration	
pH Meter ID No./Desc.: Calibration Date/Time:	Turbidity Meter ID No./Desc.: Calibration Date/Time:

Field pH and Turbidity Measurements			
Discharge Location Description	pH	Turbidity	Time

Grab Samples Collected		
Discharge Location Description	Other (specify)	Time

Additional Sampling Notes:
Time End:

Risk Level 3
Receiving Water Sampling Field Log Sheets

Construction Site Name:	Date:	Time Start:
Sampler:		

Receiving Water Description and Observations

Receiving Water Name/ID:	
Observations:	
Odors	Yes ☐ No ☐
Floating material	Yes ☐ No ☐
Suspended Material	Yes ☐ No ☐
Sheen	Yes ☐ No ☐
Discolorations	Yes ☐ No ☐
Turbidity	Yes ☐ No ☐

Field Meter Calibration

pH Meter ID No./Desc.:	Turbidity Meter ID No./Desc.:
Calibration Date/Time:	Calibration Date/Time:

Field pH and Turbidity Measurements and SSC Grab Sample

Upstream Location

Type	Result	Time	Notes
pH			
Turbidity			
SSC	Collected Yes ☐ No ☐		

Downstream Location

Type	Result	Time	Notes
pH			
Turbidity			
SSC	Collected Yes ☐ No ☐		

Additional Sampling Notes:

Time End:

NAL Exceedance Evaluation Summary Report	Page __ of __
Project Name	
Project WDID	
Project Location	
Date of Exceedance	
Type of Exceedance	NAL Daily Average ☐ pH ☐ Turbidity ☐ Other (specify) _____
Measurement or Analytical Method	☐ Field meter (Sensitivity: _____) ☐ Lab method (specify) _____ (Reporting Limit: ____) (MDL: _____)
Calculated Daily Average	☐ pH _____ pH units ☐ Turbidity _____ NTU
Rain Gauge Measurement	_____ inches
Compliance Storm Event	_____ inches (5-year, 24-hour event)
Visual Observations on Day of Exceedance	

NAL Exceedance Evaluation Summary Report	Page __ of __
Description of BMPs in Place at Time of Event	
Initial Assessment of Cause	
Corrective Actions Taken (deployed after exceedance)	
Additional Corrective Actions Proposed	
Report Completed By	_____ (Print Name, Title)
Signature	_____

CHAIN-OF-CUSTODY **DATE:** **Lab ID:**

DESTINATION LAB:

ATTN:

ADDRESS:

Office Phone:

Cell Phone:

SAMPLED BY:

Contact:

Project Name

REQUESTED ANALYSIS

Notes:

Client Sample ID	Sample Date	Sample Time	Sample Matrix	Container #	Container Type	Container Pres.				

SENDER COMMENTS:

RELINQUISHED BY

Signature:

Print:

Company:

Date: TIME:

LABORATORY COMMENTS:

RECEIVED BY

Signature:

Print:

Company:

Date: TIME:

Section 8 References

Project Plans and Specifications No. [Insert Number] dated [insert date], prepared by [entity preparing plans and specifications]

State Water Resources Control Board (2009). Order 2009-0009-DWQ, NPDES General Permit No. CAS000002: National Pollutant Discharges Elimination System (NPDES) California General Permit for Storm Water Discharge Associated with Construction and Land Disturbing Activities. Available on-line at: http://www.waterboards.ca.gov/water_issues/programs/stormwater/construction.shtml.

State Water Resources Control Board (2010). Order 2010-0014-DWQ, NPDES General Permit No. CAS000002: National Pollutant Discharges Elimination System (NPDES) California General Permit for Storm Water Discharge Associated with Construction and Land Disturbing Activities. Available on-line at: http://www.waterboards.ca.gov/water_issues/programs/stormwater/construction.shtml.

State Water Resources Control Board (2012). Order 2012-00xx-DWQ, NPDES General Permit No. CAS000002: National Pollutant Discharges Elimination System (NPDES) California General Permit for Storm Water Discharge Associated with Construction and Land Disturbing Activities. Available on-line at: http://www.waterboards.ca.gov/water_issues/programs/stormwater/construction.shtml.

[Include additional references as needed]

CASQA 2009, *Stormwater BMP Handbook Portal: Construction*, November 2009, www.casqa.org

Appendix A: Calculations

Computation Sheet for Determining Runoff Coefficients

PROJECT: TORRANCE TRANSIT PARK & RIDE REGIONAL TERMINAL
PROJECT NO.: 5FWA010100
DATE: 3/13/2014

Total Site Area	=	15.7	Acres	(A)

Existing Site Conditions

Impervious Area	=	0	Acres	(B)
Impervious Area Runoff Coefficient	=	0.95		(C)
Pervious Area	=	15.7	Acres	(D)
Pervious Area Runoff Coefficient	=	0.3		(E)
Existing Site Runoff Coefficient (BxC)+(DxE)/(A)	=	**0.30**		(F)

Post-Construction Site Conditions

Impervious Area	=	6.4	Acres	(G)
Impervious Area Runoff Coefficient	=	0.9		(H)
Pervious Area	=	9.3	Acres	(I)
Pervious Area Runoff Coefficient	=	0.4		(J)
Post-Construction Runoff Coefficient (GxH)+(IxJ)/(A)	=	**0.60**		(K)

Figure 819.2A

Runoff Coefficients for Undeveloped Areas
Watershed Types

	Extreme	High	Normal	Low
Relief	**.28 -.35** Steep, rugged terrain with average slopes above 30%	**.20 -.28** Hilly, with average slopes of 10 to 30%	**.14 -.20** Rolling, with average slopes of 5 to 10%	**.08 -.14** Relatively flat land, with average slopes of 0 to 5%
Soil Infiltration	**.12 -.16** No effective soil cover, either rock or thin soil mantle of negligible infiltration capacity	**.08 -.12** Slow to take up water, clay or shallow loam soils of low infiltration capacity, imperfectly or poorly drained	**.06 -.08** Normal; well drained light or medium textured soils, sandy loams, silt and silt loams	**.04 -.06** High; deep sand or other soil that takes up water readily, very light well drained soils
Vegetal Cover	**.12 -.16** No effective plant cover, bare or very sparse cover	**.08 -.12** Poor to fair; clean cultivation crops, or poor natural cover, less than 20% of drainage area over good cover	**.06 -.08** Fair to good; about 50% of area in good grassland or wood-land, not more than 50% of area in cultivated crops	**.04 -.06** Good to excellent; about 90% of drainage area in good grassland, woodland or equivalent cover.
Surface Storage	**.10 -.12** Negligible surface depression few and shallow; drainageways steep and small, no marshes	**.08 -.10** Low; well defined system of small drainageways; no ponds or marshes	**.06 -.08** Normal; considerable surface depression storage; lakes and pond marshes	**.04 -.06** High; surface stor-age, high; drainage system not sharply defined; large flood plain storage or large number of ponds or marshes.

Given An undeveloped watershed consisting of;

1) rolling terrain with average slopes of 5%,
2) clay type soils,
3) good grassland area, and
4) normal surface depressions.

Solution:

Relief	0.14
Soil Infiltration	0.08
Vegetal Cover	0.04
Surface Storage	0.06
C=	0.32

Find The runoff coefficient, C, for the above watershed.

.08
.10
.08
.04
.30

Table 819.2B

Runoff Coefficients for Developed Areas

Type of Drainage Area	Runoff Coefficient
Business:	
Downtown areas	0.70 - 0.95
Neighborhood areas	0.50 - 0.70
Residential:	
Single-family areas	0.30 - 0.50
Multi-units, detached	0.40 - 0.60
Multi-units, attached	0.60 - 0.75
Suburban	0.25 - 0.40
Apartment dwelling areas	0.50 - 0.70
Industrial:	
Light areas	0.50 - 0.80
Heavy areas	0.60 - 0.90
Parks, cemeteries:	0.10 - 0.25
Playgrounds:	0.20 - 0.40
Railroad yard areas:	0.20 - 0.40
Unimproved areas:	0.10 - 0.30
Lawns:	
Sandy soil, flat, 2%	0.05 - 0.10
Sandy soil, average, 2-7%	0.10 - 0.15
Sandy soil, steep, 7%	0.15 - 0.20
Heavy soil, flat, 2%	0.13 - 0.17
Heavy soil, average, 2-7%	0.18 - 0.25
Heavy soil, steep, 7%	0.25 - 0.35
Streets:	
Asphaltic	0.70 - 0.95
Concrete	0.80 - 0.95
Brick	0.70 - 0.85
Drives and walks	0.75 - 0.85
Roofs:	0.75 - 0.95

Table 1
Hydrologic Analysis Input Summary

Watershed ID	Area	% Imp	Frequency	Soil Type	Length	Slope
	(ac)		(year)		(ft)	(ft/ft)
SUB-BASIN A						
1	0.416	0	10	13	547	0.004
2	1.052	95	10	13	569	0.005
3	0.142	95	10	13	50	0.005
4	0.120	95	10	13	60	0.005
5	0.350	95	10	13	191	0.007
6	0.202	95	10	13	177	0.017
7	1.045	75	10	13	263	0.010
8	0.329	95	10	13	254	0.013
A	0.507	25	10	13	100	0.005
B	0.387	0	10	13	100	0.005
SUB-BASIN B						
9	0.457	95	10	13	445	0.009
10	1.976	95	10	13	438	0.009
SUB-BASIN C						
C	5.745	0	10	13	443	0.014
SUB-BASIN D						
11	2.268	0	10	13	479	0.007
SUB-BASIN E						
12	0.714	95	10	13	528	0.004
ENTIRE SITE						
Existing Site	15.710	0	10	13	950	0.007
Former PPG Site	15.710	90	10	13	1000	0.005
Crenshaw (South of 208th)	0.888	95	10	13	1000	0.005
Crenshaw (North of 208th)	1.104	95	10	13	1050	0.005

Appendix B: Site Maps

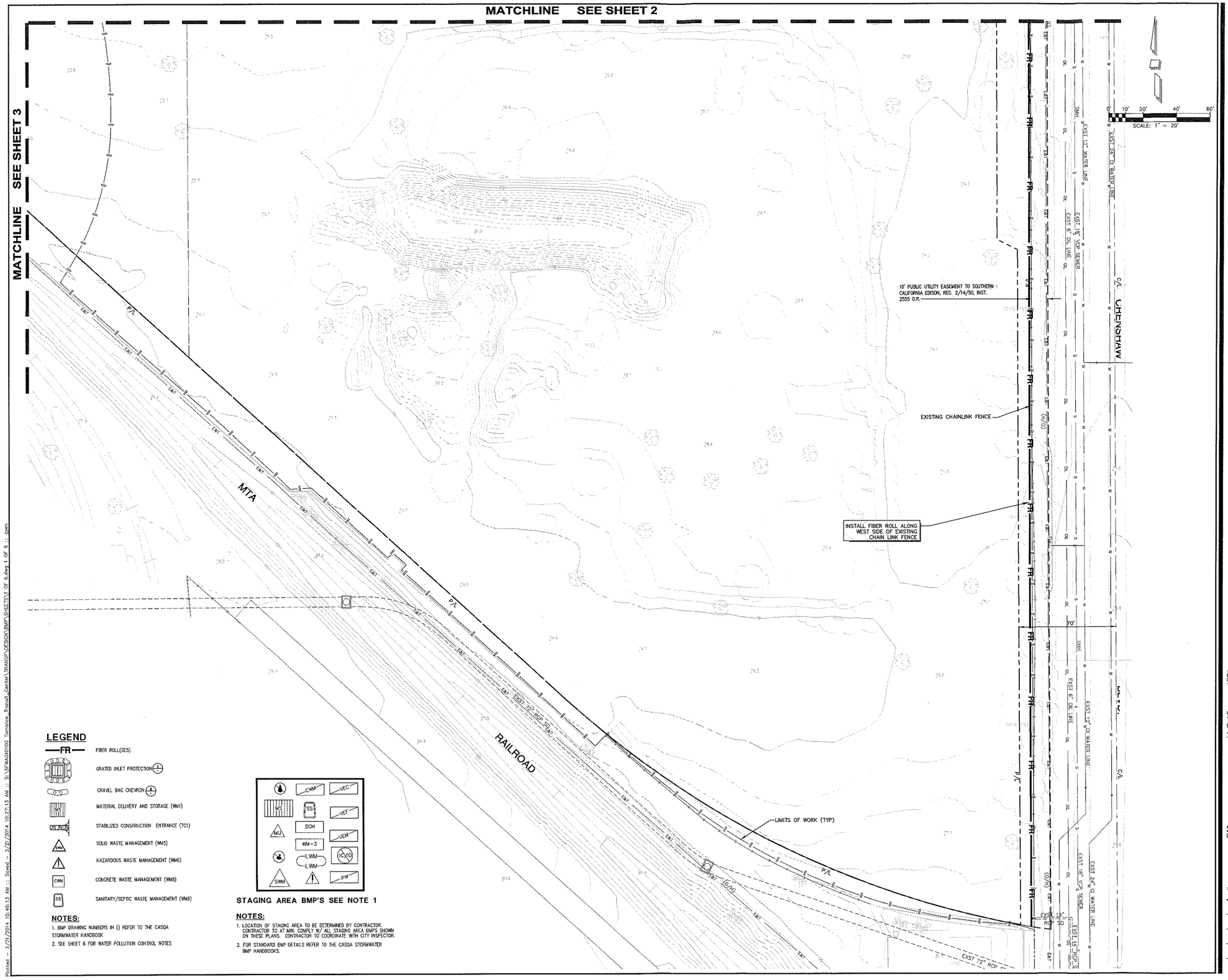

LEGEND

- FR — FIBER ROLL(SES)
- GRATED INLET PROTECTION
- GRAVEL BAG CHEVRON
- MATERIAL DELIVERY AND STORAGE (WM1)
- STABILIZED CONSTRUCTION ENTRANCE (TC1)
- SOLID WASTE MANAGEMENT (WM5)
- HAZARDOUS WASTE MANAGEMENT (WM6)
- CONCRETE WASTE MANAGEMENT (WM8)
- SANITARY/SEPTIC WASTE MANAGEMENT (WM9)

NOTES:

1. BMP DRAWING NUMBERS IN () REFER TO THE CASQA STORMWATER HANDBOOK
2. SEE SHEET 6 FOR WATER POLLUTION CONTROL NOTES

STAGING AREA BMP'S SEE NOTE 1

NOTES:

1. LOCATION OF STAGING AREA TO BE DETERMINED BY CONTRACTOR. CONTRACTOR TO AT MIN. COMPLY W/ ALL STAGING AREA BMPS SHOWN ON THESE PLANS. CONTRACTOR TO COORDINATE WITH CITY INSPECTOR.
2. FOR STANDARD BMP DETAILS REFER TO THE CASQA STORMWATER BMP HANDBOOKS.

FRANK R. WEBB ARCHITECTS
www.frankrwebb.com Los Angeles | Pasadena

6107 Venice Boulevard Los Angeles, CA 90034
tel: 310. 559. 4757 fax: 310. 559. 9174

THESE DRAWINGS AND SPECIFICATIONS AND IDEAL DESIGNS AND ARRANGEMENTS REPRESENTED THEREBY ARE AND SHALL REMAIN THE PROPERTY OF THE ARCHITECT. THEY ARE NOT TO BE LOANED, GIVEN, PROCEEDED TO OTHERS, OR USED IN CONNECTION WITH ANY WORK OR PROJECT OTHER THAN THE SPECIFIED PROJECT FOR WHICH THEY HAVE BEEN PREPARED AND DEVELOPED WITHOUT THE WRITTEN CONSENT OF THE ARCHITECT. WRITTEN DIMENSIONS ON THESE DRAWINGS TAKE PRECEDENCE OVER SCALED DIMENSIONS. COMMENCEMENT OF WORK IMPLIES ACCEPTANCE OF THESE RESTRICTIONS.

No.	Distribution/Revision	Date
	30% Design Review/Cost Estimate	8.10.2013
	60% Construction Documents	11.15.2013
	City Submittal	12.17.2013
	95% Construction Documents	3.7.2014

PSOMAS
3111 Camino Del Rio North, Suite 702
San Diego, CA 92108
(619) 961-2800 (619) 961-2392 fax
www.psomas.com

City of Torrance
Torrance Transit Park & Ride
Regional Terminal
465 Crenshaw Blvd.
Torrance, CA 90503

Torrance Transit Park and Ride Regional Terminal

CLIENT PROJECT #:B2013-15

Drawing Title: SITE MAP- WATER POLLUTION CONTROL PLAN (BMP'S TO BE INSTALLED PRIOR TO START OF ANY CONSTRUCTION)

Scale: 1" = 20'
IF DRAWING IS NOT 30X42 THEN IT IS NOT TO SCALE

Location	LA
Project Manager	KF
Project No.	13025
Date Plotted	12/17/2013

Drawing No. 1 of 6

Plotted – 3/21/2014 10:46:13 AM :: Saved – 3/21/2014 10:27:13 AM :: S:\EPWA01010 Torrance_Transit_Center\TRANSP\DESIGN\BMP\SHEETS\1 OF 6.dwg 1 OF 6 :: gwen

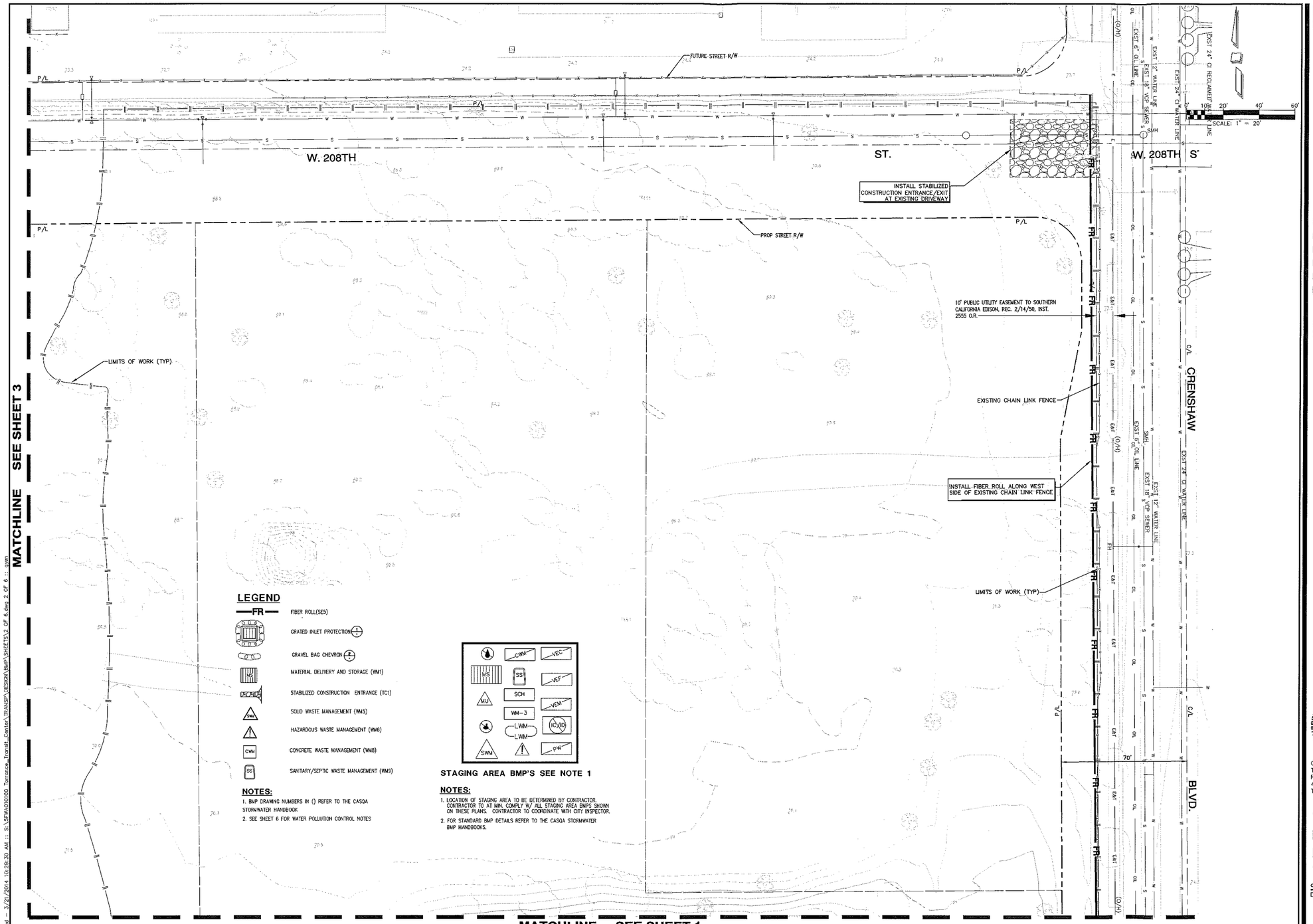

LEGEND

- FR — FIBER ROLL(SE5)
- GRATED INLET PROTECTION
- GRAVEL BAG CHEVRON
- MATERIAL DELIVERY AND STORAGE (WM1)
- STABILIZED CONSTRUCTION ENTRANCE (TC1)
- SOLID WASTE MANAGEMENT (WM5)
- HAZARDOUS WASTE MANAGEMENT (WM6)
- CONCRETE WASTE MANAGEMENT (WM8)
- SANITARY/SEPTIC WASTE MANAGEMENT (WM9)

NOTES:

1. BMP DRAWING NUMBERS IN () REFER TO THE CASQA STORMWATER HANDBOOK
2. SEE SHEET 6 FOR WATER POLLUTION CONTROL NOTES

STAGING AREA BMP'S SEE NOTE 1

NOTES:

1. LOCATION OF STAGING AREA TO BE DETERMINED BY CONTRACTOR. CONTRACTOR TO AT MIN. COMPLY W/ ALL STAGING AREA BMPS SHOWN ON THESE PLANS. CONTRACTOR TO COORDINATE WITH CITY INSPECTOR.
2. FOR STANDARD BMP DETAILS REFER TO THE CASQA STORMWATER BMP HANDBOOKS.

FRANK R. WEBB ARCHITECTS
www.frankrwebb.com Los Angeles | Fullerton

5657 Venice Boulevard Los Angeles, CA 90034
Tel: 310. 559. 4717 Fax: 310. 559. 4174

THESE DRAWINGS AND SPECIFICATIONS AND IDEAS, DESIGNS AND ARRANGEMENTS REPRESENTED THEREBY ARE AND SHALL REMAIN THE PROPERTY OF FRANK R. WEBB ARCHITECTS. THEY ARE NOT TO BE ASSIGNED TO OTHERS, OR USED IN CONNECTION WITH ANY WORK OR PROJECT OTHER THAN THE SPECIFIED PROJECT FOR WHICH THEY HAVE BEEN PREPARED AND DEVELOPED WITHOUT THE WRITTEN CONSENT OF THE ARCHITECT. REGARDING CONFLICTS WITH THESE DRAWINGS OR SPECIFICATIONS SHALL CONSTITUTE CONCLUSIVE EVIDENCE OF ACCEPTANCE OF THESE RESTRICTIONS.

No.	Distribution/Revision	Date
	30% Design Review/Cost Estimate	8.19.2013
	60% Construction Documents	11.15.2013
	City Submittal	12.17.2013
	99% Construction Documents	3.7.2014

PSOMAS
3111 Camino Del Rio North, Suite 702
San Diego, CA 92108
(619) 961-2800 (619) 961-2392 fax
www.psomas.com

City of Torrance
Torrance Transit Park & Ride
Regional Terminal
465 Crenshaw Blvd.
Torrance, CA 90503

Torrance Transit Park and Ride Regional Terminal

CLIENT PROJECT #:B2013-15

Drawing Title

SITE MAP-
WATER POLLUTION
CONTROL PLAN
(BMP'S TO BE INSTALLED
PRIOR TO START OF ANY
CONSTRUCTION)

Scale: 1" = 20'

IF DRAWING IS NOT 30X42 THEN IT IS NOT TO SCALE

Location	LA
Project Manager	KF
Project No.	13025
Date Plotted	12/17/2013

Drawing No.

2 of 6

Plotted – 3/21/2014 10:46:42 AM :: Saved – 3/21/2014 10:28:30 AM :: S:\SFWA010100 Torrance_Transit_Center\TRANSP\DESIGN\BMP\SHEETS\2 OF 6.dwg 2 OF 6 :: gwen

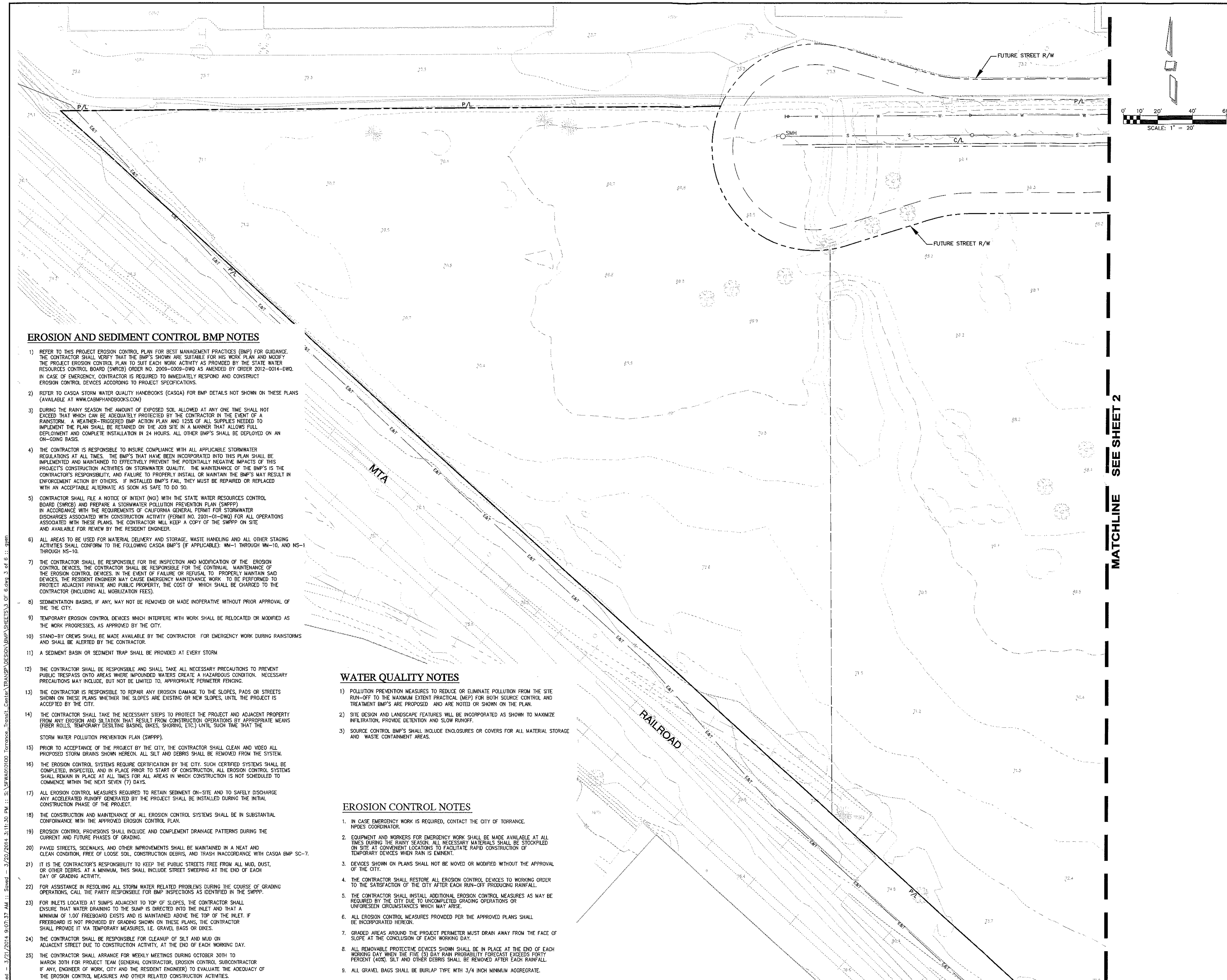

EROSION AND SEDIMENT CONTROL BMP NOTES

1) REFER TO THIS PROJECT EROSION CONTROL PLAN FOR BEST MANAGEMENT PRACTICES (BMP) FOR GUIDANCE. THE CONTRACTOR SHALL VERIFY THAT THE BMP'S SHOWN ARE SUITABLE FOR HIS WORK PLAN AND MODIFY THE PROJECT EROSION CONTROL PLAN TO SUIT EACH WORK ACTIVITY AS PROVIDED BY THE STATE WATER RESOURCES CONTROL BOARD (SWRCB) ORDER NO. 2009-0009-DWQ AS AMENDED BY ORDER 2012-0014-DWQ. IN CASE OF EMERGENCY, CONTRACTOR IS REQUIRED TO IMMEDIATELY RESPOND AND CONSTRUCT EROSION CONTROL DEVICES ACCORDING TO PROJECT SPECIFICATIONS.

2) REFER TO CASQA STORM WATER QUALITY HANDBOOKS (CASQA) FOR BMP DETAILS NOT SHOWN ON THESE PLANS (AVAILABLE AT WWW.CABMPHANDBOOKS.COM)

3) DURING THE RAINY SEASON THE AMOUNT OF EXPOSED SOIL ALLOWED AT ANY ONE TIME SHALL NOT EXCEED THAT WHICH CAN BE ADEQUATELY PROTECTED BY THE CONTRACTOR IN THE EVENT OF A RAINSTORM. A WEATHER-TRIGGERED BMP ACTION PLAN AND 125% OF ALL SUPPLIES NEEDED TO IMPLEMENT THE PLAN SHALL BE RETAINED ON THE JOB SITE IN A MANNER THAT ALLOWS FULL DEPLOYMENT AND COMPLETE INSTALLATION IN 24 HOURS. ALL OTHER BMP'S SHALL BE DEPLOYED ON AN ON-GOING BASIS.

4) THE CONTRACTOR IS RESPONSIBLE TO INSURE COMPLIANCE WITH ALL APPLICABLE STORMWATER REGULATIONS AT ALL TIMES. THE BMP'S THAT HAVE BEEN INCORPORATED INTO THIS PLAN SHALL BE IMPLEMENTED AND MAINTAINED TO EFFECTIVELY PREVENT THE POTENTIALLY NEGATIVE IMPACTS OF THIS PROJECT'S CONSTRUCTION ACTIVITIES ON STORMWATER QUALITY. THE MAINTENANCE OF THE BMP'S IS THE CONTRACTOR'S RESPONSIBILITY, AND FAILURE TO PROPERLY INSTALL OR MAINTAIN THE BMP'S MAY RESULT IN ENFORCEMENT ACTION BY OTHERS. IF INSTALLED BMP'S FAIL, THEY MUST BE REPAIRED OR REPLACED WITH AN ACCEPTABLE ALTERNATE AS SOON AS SAFE TO DO SO.

5) CONTRACTOR SHALL FILE A NOTICE OF INTENT (NOI) WITH THE STATE WATER RESOURCES CONTROL BOARD (SWRCB) AND PREPARE A STORMWATER POLLUTION PREVENTION PLAN (SWPPP) IN ACCORDANCE WITH THE REQUIREMENTS OF CALIFORNIA GENERAL PERMIT FOR STORMWATER DISCHARGES ASSOCIATED WITH CONSTRUCTION ACTIVITY (PERMIT NO. 2001-01-DWQ) FOR ALL OPERATIONS ASSOCIATED WITH THESE PLANS. THE CONTRACTOR WILL KEEP A COPY OF THE SWPPP ON SITE AND AVAILABLE FOR REVIEW BY THE RESIDENT ENGINEER.

6) ALL AREAS TO BE USED FOR MATERIAL DELIVERY AND STORAGE, WASTE HANDLING AND ALL OTHER STAGING ACTIVITIES SHALL CONFORM TO THE FOLLOWING CASQA BMP'S (IF APPLICABLE): WM-1 THROUGH WM-10, AND NS-1 THROUGH NS-10.

7) THE CONTRACTOR SHALL BE RESPONSIBLE FOR THE INSPECTION AND MODIFICATION OF THE EROSION CONTROL DEVICES, THE CONTRACTOR SHALL BE RESPONSIBLE FOR THE CONTINUAL MAINTENANCE OF THE EROSION CONTROL DEVICES. IN THE EVENT OF FAILURE OR REFUSAL TO PROPERLY MAINTAIN SAID DEVICES, THE RESIDENT ENGINEER MAY CAUSE EMERGENCY MAINTENANCE WORK TO BE PERFORMED TO PROTECT ADJACENT PRIVATE AND PUBLIC PROPERTY, THE COST OF WHICH SHALL BE CHARGED TO THE CONTRACTOR (INCLUDING ALL MOBILIZATION FEES).

8) SEDIMENTATION BASINS, IF ANY, MAY NOT BE REMOVED OR MADE INOPERATIVE WITHOUT PRIOR APPROVAL OF THE THE CITY.

9) TEMPORARY EROSION CONTROL DEVICES WHICH INTERFERE WITH WORK SHALL BE RELOCATED OR MODIFIED AS THE WORK PROGRESSES, AS APPROVED BY THE CITY.

10) STAND-BY CREWS SHALL BE MADE AVAILABLE BY THE CONTRACTOR FOR EMERGENCY WORK DURING RAINSTORMS AND SHALL BE ALERTED BY THE CONTRACTOR.

11) A SEDIMENT BASIN OR SEDIMENT TRAP SHALL BE PROVIDED AT EVERY STORM

12) THE CONTRACTOR SHALL BE RESPONSIBLE AND SHALL TAKE ALL NECESSARY PRECAUTIONS TO PREVENT PUBLIC TRESPASS ONTO AREAS WHERE IMPOUNDED WATERS CREATE A HAZARDOUS CONDITION. NECESSARY PRECAUTIONS MAY INCLUDE, BUT NOT BE LIMITED TO, APPROPRIATE PERIMETER FENCING.

13) THE CONTRACTOR IS RESPONSIBLE TO REPAIR ANY EROSION DAMAGE TO THE SLOPES, PADS OR STREETS SHOWN ON THESE PLANS WHETHER THE SLOPES ARE EXISTING OR NEW SLOPES, UNTIL THE PROJECT IS ACCEPTED BY THE CITY.

14) THE CONTRACTOR SHALL TAKE THE NECESSARY STEPS TO PROTECT THE PROJECT AND ADJACENT PROPERTY FROM ANY EROSION AND SILTATION THAT RESULT FROM CONSTRUCTION OPERATIONS BY APPROPRIATE MEANS (FIBER ROLLS, TEMPORARY DESILTING BASINS, DIKES, SHORING, ETC.) UNTIL SUCH TIME THAT THE

STORM WATER POLLUTION PREVENTION PLAN (SWPPP).

15) PRIOR TO ACCEPTANCE OF THE PROJECT BY THE CITY, THE CONTRACTOR SHALL CLEAN AND VIDEO ALL PROPOSED STORM DRAINS SHOWN HEREON. ALL SILT AND DEBRIS SHALL BE REMOVED FROM THE SYSTEM.

16) THE EROSION CONTROL SYSTEMS REQUIRE CERTIFICATION BY THE CITY. SUCH CERTIFIED SYSTEMS SHALL BE COMPLETED, INSPECTED, AND IN PLACE PRIOR TO START OF CONSTRUCTION, ALL EROSION CONTROL SYSTEMS SHALL REMAIN IN PLACE AT ALL TIMES FOR ALL AREAS IN WHICH CONSTRUCTION IS NOT SCHEDULED TO COMMENCE WITHIN THE NEXT SEVEN (7) DAYS.

17) ALL EROSION CONTROL MEASURES REQUIRED TO RETAIN SEDIMENT ON-SITE AND TO SAFELY DISCHARGE ANY ACCELERATED RUNOFF GENERATED BY THE PROJECT SHALL BE INSTALLED DURING THE INITIAL CONSTRUCTION PHASE OF THE PROJECT.

18) THE CONSTRUCTION AND MAINTENANCE OF ALL EROSION CONTROL SYSTEMS SHALL BE IN SUBSTANTIAL CONFORMANCE WITH THE APPROVED EROSION CONTROL PLAN.

19) EROSION CONTROL PROVISIONS SHALL INCLUDE AND COMPLEMENT DRAINAGE PATTERNS DURING THE CURRENT AND FUTURE PHASES OF GRADING.

20) PAVED STREETS, SIDEWALKS, AND OTHER IMPROVEMENTS SHALL BE MAINTAINED IN A NEAT AND CLEAN CONDITION, FREE OF LOOSE SOIL, CONSTRUCTION DEBRIS, AND TRASH INACCORDANCE WITH CASQA BMP SC-7.

21) IT IS THE CONTRACTOR'S RESPONSIBILITY TO KEEP THE PUBLIC STREETS FREE FROM ALL MUD, DUST, OR OTHER DEBRIS. AT A MINIMUM, THIS SHALL INCLUDE STREET SWEEPING AT THE END OF EACH DAY OF GRADING ACTIVITY.

22) FOR ASSISTANCE IN RESOLVING ALL STORM WATER RELATED PROBLEMS DURING THE COURSE OF GRADING OPERATIONS, CALL THE PARTY RESPONSIBLE FOR BMP INSPECTIONS AS IDENTIFIED IN THE SWPPP.

23) FOR INLETS LOCATED AT SUMPS ADJACENT TO TOP OF SLOPES, THE CONTRACTOR SHALL ENSURE THAT WATER DRAINING TO THE SUMP IS DIRECTED INTO THE INLET AND THAT A MINIMUM OF 1.00' FREEBOARD EXISTS AND IS MAINTAINED ABOVE THE TOP OF THE INLET. IF FREEBOARD IS NOT PROVIDED BY GRADING SHOWN ON THESE PLANS, THE CONTRACTOR SHALL PROVIDE IT VIA TEMPORARY MEASURES, I.E. GRAVEL BAGS OR DIKES.

24) THE CONTRACTOR SHALL BE RESPONSIBLE FOR CLEANUP OF SILT AND MUD ON ADJACENT STREET DUE TO CONSTRUCTION ACTIVITY, AT THE END OF EACH WORKING DAY.

25) THE CONTRACTOR SHALL ARRANGE FOR WEEKLY MEETINGS DURING OCTOBER 30TH TO MARCH 30TH FOR PROJECT TEAM (GENERAL CONTRACTOR, EROSION CONTROL SUBCONTRACTOR IF ANY, ENGINEER OF WORK, CITY AND THE RESIDENT ENGINEER) TO EVALUATE THE ADEQUACY OF THE EROSION CONTROL MEASURES AND OTHER RELATED CONSTRUCTION ACTIVITIES.

WATER QUALITY NOTES

1) POLLUTION PREVENTION MEASURES TO REDUCE OR ELIMINATE POLLUTION FROM THE SITE RUN-OFF TO THE MAXIMUM EXTENT PRACTICAL (MEP) FOR BOTH SOURCE CONTROL AND TREATMENT BMP'S ARE PROPOSED AND ARE NOTED OR SHOWN ON THE PLAN.

2) SITE DESIGN AND LANDSCAPE FEATURES WILL BE INCORPORATED AS SHOWN TO MAXIMIZE INFILTRATION, PROVIDE DETENTION AND SLOW RUNOFF.

3) SOURCE CONTROL BMP'S SHALL INCLUDE ENCLOSURES OR COVERS FOR ALL MATERIAL STORAGE AND WASTE CONTAINMENT AREAS.

EROSION CONTROL NOTES

1. IN CASE EMERGENCY WORK IS REQUIRED, CONTACT THE CITY OF TORRANCE. NPDES COORDINATOR.
2. EQUIPMENT AND WORKERS FOR EMERGENCY WORK SHALL BE MADE AVAILABLE AT ALL TIMES DURING THE RAINY SEASON. ALL NECESSARY MATERIALS SHALL BE STOCKPILED ON SITE AT CONVENIENT LOCATIONS TO FACILITATE RAPID CONSTRUCTION OF TEMPORARY DEVICES WHEN RAIN IS EMINENT.
3. DEVICES SHOWN ON PLANS SHALL NOT BE MOVED OR MODIFIED WITHOUT THE APPROVAL OF THE CITY.
4. THE CONTRACTOR SHALL RESTORE ALL EROSION CONTROL DEVICES TO WORKING ORDER TO THE SATISFACTION OF THE CITY AFTER EACH RUN-OFF PRODUCING RAINFALL.
5. THE CONTRACTOR SHALL INSTALL ADDITIONAL EROSION CONTROL MEASURES AS MAY BE REQUIRED BY THE CITY DUE TO UNCOMPLETED GRADING OPERATIONS OR UNFORESEEN CIRCUMSTANCES WHICH MAY ARISE.
6. ALL EROSION CONTROL MEASURES PROVIDED PER THE APPROVED PLANS SHALL BE INCORPORATED HEREON.
7. GRADED AREAS AROUND THE PROJECT PERIMETER MUST DRAIN AWAY FROM THE FACE OF SLOPE AT THE CONCLUSION OF EACH WORKING DAY.
8. ALL REMOVABLE PROTECTIVE DEVICES SHOWN SHALL BE IN PLACE AT THE END OF EACH WORKING DAY WHEN THE FIVE (5) DAY RAIN PROBABILITY FORECAST EXCEEDS FORTY PERCENT (40%). SILT AND OTHER DEBRIS SHALL BE REMOVED AFTER EACH RAINFALL.
9. ALL GRAVEL BAGS SHALL BE BURLAP TYPE WITH 3/4 INCH MINIMUM AGGREGATE.

Plotted - 3/21/2014 9:07:37 AM :: Saved - 3/20/2014 3:11:30 PM :: S:\5FWA010100 Torrance_Transit_Center\TRANSP\DESIGN\BMP\SHEETS\3 OF 6.dwg 3 of 6 :: gyen

FRANK R. WEBB ARCHITECTS
www.teamfwa.com Los Angeles | Fullerton
8407 Venice Boulevard Los Angeles, CA 90034
tel: 310. 557. 4717 fax: 310. 557. 7174

THESE DRAWINGS AND SPECIFICATIONS AND IDEAS, DESIGNS AND ARRANGEMENTS REPRESENTED THEREBY ARE AND SHALL REMAIN THE PROPERTY OF THE ARCHITECT; NO PART THEREOF SHALL BE COPIED, DISCLOSED TO OTHERS, OR USED IN CONNECTION WITH ANY WORK OR PROJECT OTHER THAN THE SPECIFIED PROJECT FOR WHICH THEY HAVE BEEN PREPARED AND DEVELOPED WITHOUT THE WRITTEN CONSENT OF THE ARCHITECT. VISUAL CONTACT WITH THESE DRAWINGS OR SPECIFICATIONS SHALL CONSTITUTE CONCLUSIVE EVIDENCE OF ACCEPTANCE OF THESE RESTRICTIONS.

No.	Distribution/Revision	Date
	30% Design Review/Cost Estimate	8.15.2013
	65% Construction Documents	11.15.2013
	City Submittal	12.17.2013
	95% Construction Documents	3.7.2014

PSOMAS
3111 Camino Del Rio North, Suite 702
San Diego, CA 92108
(619) 961-2800 (619) 961-2392 fax
www.psomas.com

City of Torrance
Torrance Transit Park & Ride
Regional Terminal
465 Crenshaw Blvd.
Torrance, CA 90503

Torrance Transit Park and Ride Regional Terminal

CLIENT PROJECT #:B2013-15

Drawing Title: SITE MAP-
WATER POLLUTION
CONTROL PLAN
(BMP'S TO BE INSTALLED PRIOR TO START OF ANY CONSTRUCTION)

Scale: 1" = 20'
IF DRAWING IS NOT 30X42 THEN IT IS NOT TO SCALE

Location: LA
Project Manager: KF
Project No.: 13025
Date Plotted: 12/17/2013

Drawing No.
3 of 6

SEE SHEET 3 | MATCHLINE SEE SHEET 5

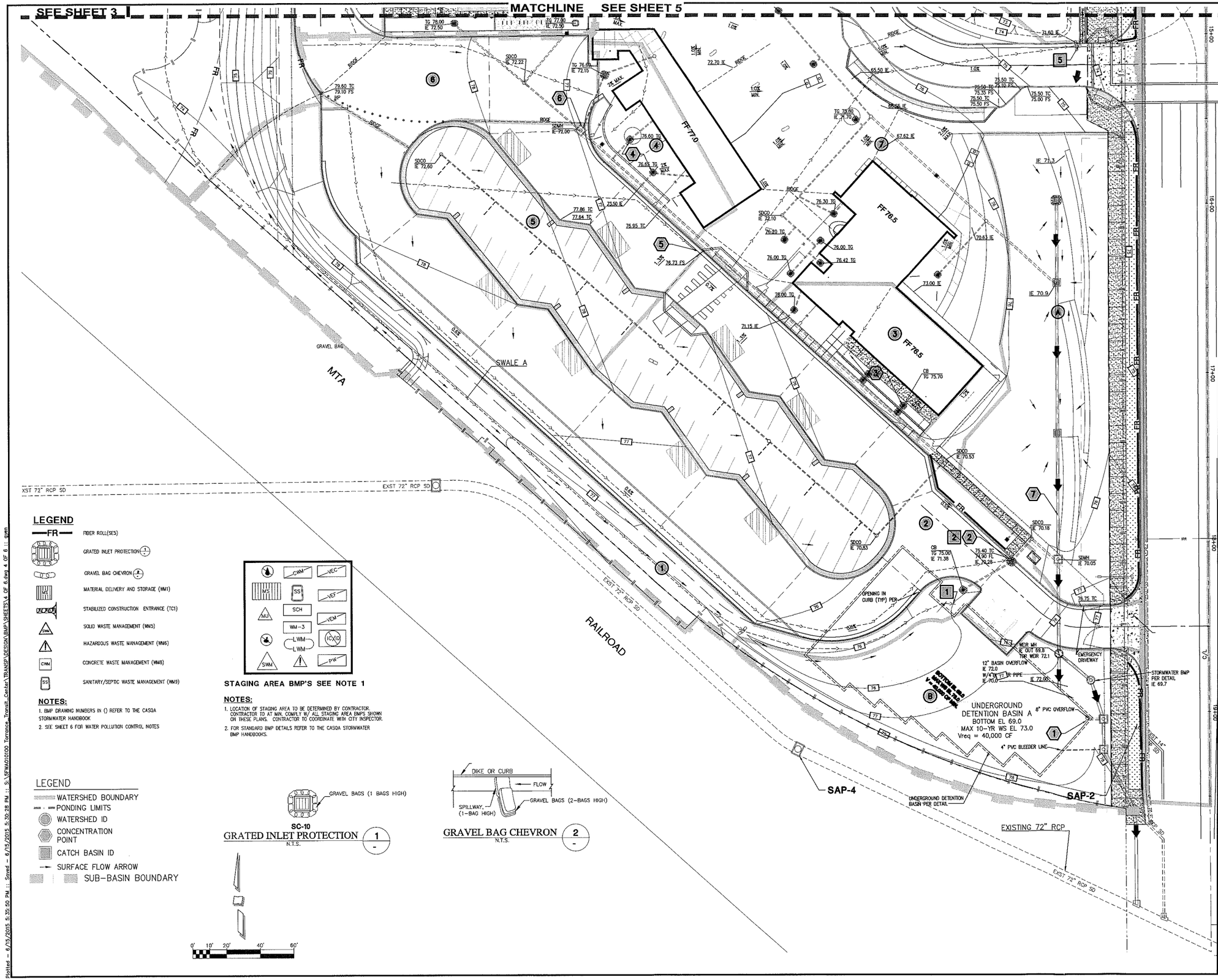

LEGEND

- FR — FIBER ROLL(SES)
- GRATED INLET PROTECTION
- GRAVEL BAG CHEVRON
- WM1 — MATERIAL DELIVERY AND STORAGE (WM1)
- TC-3.05 — STABILIZED CONSTRUCTION ENTRANCE (TC1)
- SWM — SOLID WASTE MANAGEMENT (WM5)
- HAZARDOUS WASTE MANAGEMENT (WM6)
- CWM — CONCRETE WASTE MANAGEMENT (WM8)
- SS — SANITARY/SEPTIC WASTE MANAGEMENT (WM9)

NOTES:

1. BMP DRAWING NUMBERS IN () REFER TO THE CASQA STORMWATER HANDBOOK
2. SEE SHEET 6 FOR WATER POLLUTION CONTROL NOTES

STAGING AREA BMP'S SEE NOTE 1

NOTES:

1. LOCATION OF STAGING AREA TO BE DETERMINED BY CONTRACTOR. CONTRACTOR TO AT MIN. COMPLY W/ ALL STAGING AREA BMPS SHOWN ON THESE PLANS. CONTRACTOR TO COORDINATE WITH CITY INSPECTOR.
2. FOR STANDARD BMP DETAILS REFER TO THE CASQA STORMWATER BMP HANDBOOKS.

LEGEND

- WATERSHED BOUNDARY
- PONDING LIMITS
- WATERSHED ID
- CONCENTRATION POINT
- CATCH BASIN ID
- SURFACE FLOW ARROW
- SUB-BASIN BOUNDARY

SC-10
GRATED INLET PROTECTION (1)
N.T.S.

GRAVEL BAG CHEVRON (2)
N.T.S.

FRANK R. WEBB ARCHITECTS
www.frankrwebb.com Los Angeles | Fullerton

8407 Venice Boulevard Los Angeles, CA 90034
Tel: 310. 839. 4717 Fax: 310. 839. 9174

THESE DRAWINGS AND SPECIFICATIONS AND IDEAS, DESIGNS AND ARRANGEMENTS REPRESENTED THEREBY ARE AND SHALL REMAIN THE PROPERTY OF THE ARCHITECT; NO PART THEREOF SHALL BE COPIED, DISCLOSED TO OTHERS, OR USED IN CONNECTION WITH ANY WORK OR PROJECT OTHER THAN THE SPECIFIED PROJECT FOR WHICH THEY HAVE BEEN PREPARED AND DEVELOPED WITHOUT THE WRITTEN CONSENT OF THE ARCHITECT; VISUAL CONTACT WITH THESE DRAWINGS OR SPECIFICATIONS SHALL CONSTITUTE CONCLUSIVE EVIDENCE OF ACCEPTANCE OF THESE RESTRICTIONS.

No.	Distribution/Revision	Date
	30% Design Review/Cost Estimate	8.15.2013
	65% Construction Documents	11.15.2013
	City Submittal	12.17.2013
	95% Construction Documents	3.7.2014

PSOMAS
3111 Camino Del Rio North, Suite 702
San Diego, CA 92108
(619) 961-2800 (619) 961-2392 fax
www.psomas.com

City of Torrance
Torrance Transit Park & Ride
Regional Terminal
465 Crenshaw Blvd.
Torrance, CA 90503

Torrance Transit Park and Ride Regional Terminal

CLIENT PROJECT #:B2013-15

Drawing Title SITE MAP-
WATER POLLUTION
CONTROL PLAN
(BMP'S TO BE INSTALLED AS WORK PROGRESSES)

Scale: 1"=20'

IF DRAWING IS NOT 30X42 THEN IT IS NOT TO SCALE

Location	LA
Project Manager	KF
Project No.	13025
Date Plotted	12/17/2013

Drawing No.
4
of
6

Plotted – 6/15/2015 5:35:50 PM :: Saved – 6/15/2015 5:30:28 PM :: S:\EPWA01010\0 Torrance_Transit_Center\TRANSP\DESIGN\BMP\SHEETS\4 OF 6.dwg 4 OF 6 :: gwen

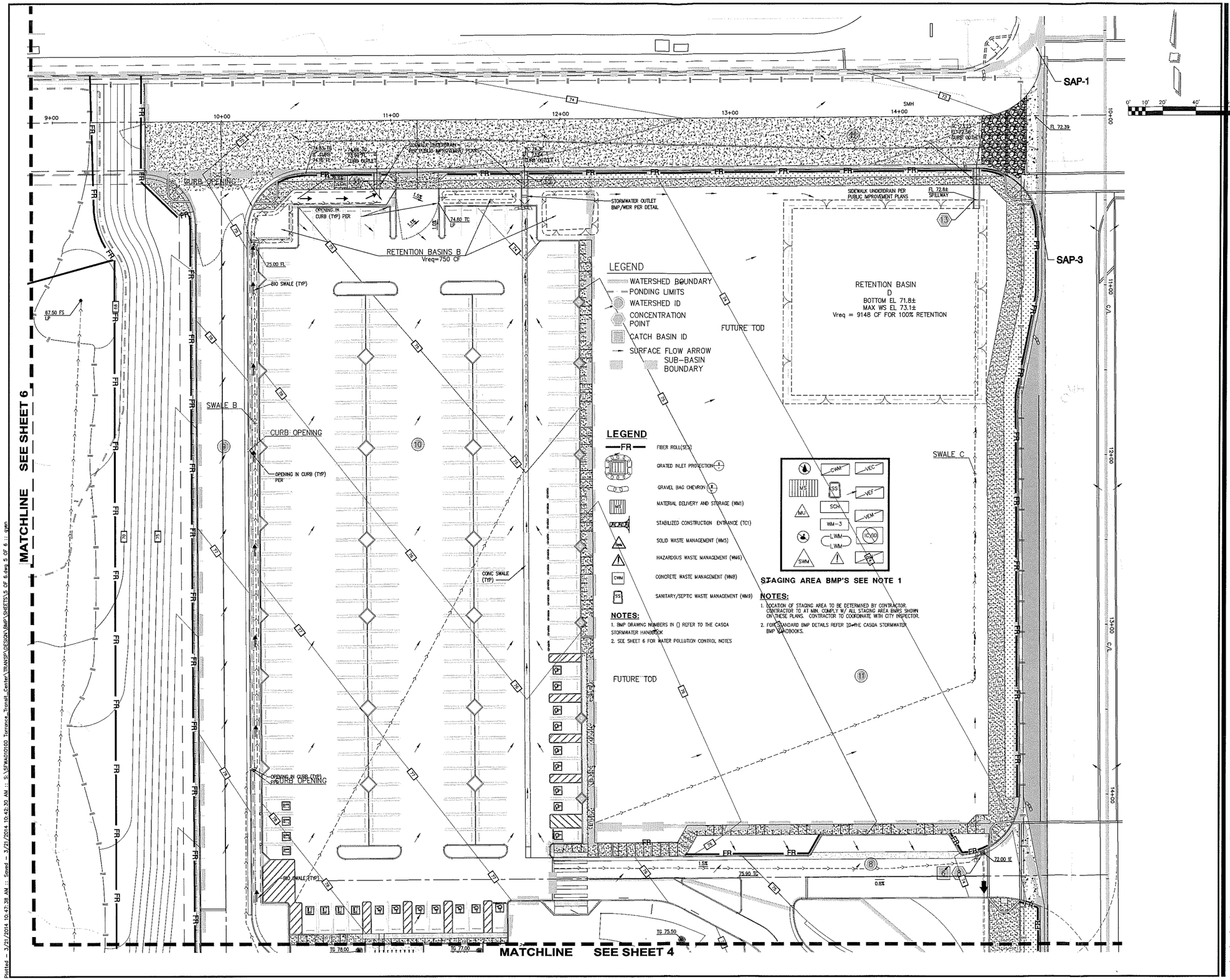

FRANK R. WEBB ARCHITECTS
www.frankrwebb.com Los Angeles | Pollution

3107 Venice Boulevard Los Angeles, CA 90034
Tel: 310. 559. 2177 Fax: 310. 559. 9174

THESE DRAWINGS AND SPECIFICATIONS AND, SEALS, DESIGNS AND ARRANGEMENTS REPRESENTED THEREBY ARE AND SHALL REMAIN THE PROPERTY OF THE ARCHITECT; NO PART THEREOF SHALL BE COPIED, DISCLOSED TO OTHERS, OR USED IN CONNECTION WITH ANY WORK OR PROJECT OTHER THAN THE SPECIFIED PROJECT FOR WHICH THEY HAVE BEEN PREPARED AND PUBLISHED WITHOUT THE WRITTEN CONSENT OF THE ARCHITECT. VISUAL CONTACT WITH THESE DRAWINGS OR SPECIFICATIONS SHALL CONSTITUTE CONCLUSIVE EVIDENCE OF ACCEPTANCE OF THESE RESTRICTIONS.

No.	Distribution/Revision	Date
	30% Design Review/Cost Estimate	8.15.2013
	65% Construction Documents	11.15.2013
	City Submittal	12.17.2013
	99% Construction Documents	3.7.2014

PSOMAS
3111 Camino Del Rio North, Suite 702
San Diego, CA 92108
(619) 961-2800 (619) 961-2392 fax
www.psomas.com

City of Torrance
Torrance Transit Park & Ride
Regional Terminal
465 Crenshaw Blvd.
Torrance, CA 90503

Torrance Transit Park and Ride Regional Terminal

CLIENT PROJECT #:B2013-15

Drawing Title SITE MAP-
WATER POLLUTION
CONTROL PLAN
(BMP'S TO BE INSTALLED AS
WORK PROGRESSES)

Scale: 1"=20'

IF DRAWING IS NOT 30X42 THEN IT IS NOT TO SCALE

Drawn	LA
Project Manager	KF
Project No.	13025
Date Plotted	12/17/2013

Drawing No.
5 of 6

Plotted – 3/21/2014 10:47:38 AM :: Saved – 3/21/2014 10:42:30 AM :: S:\SFWA01060 Torrance_Transit_Center\TRANSA\DESIGN\BMP\SHEETS\5 OF 6.dwg 5 OF 6 :: sywn

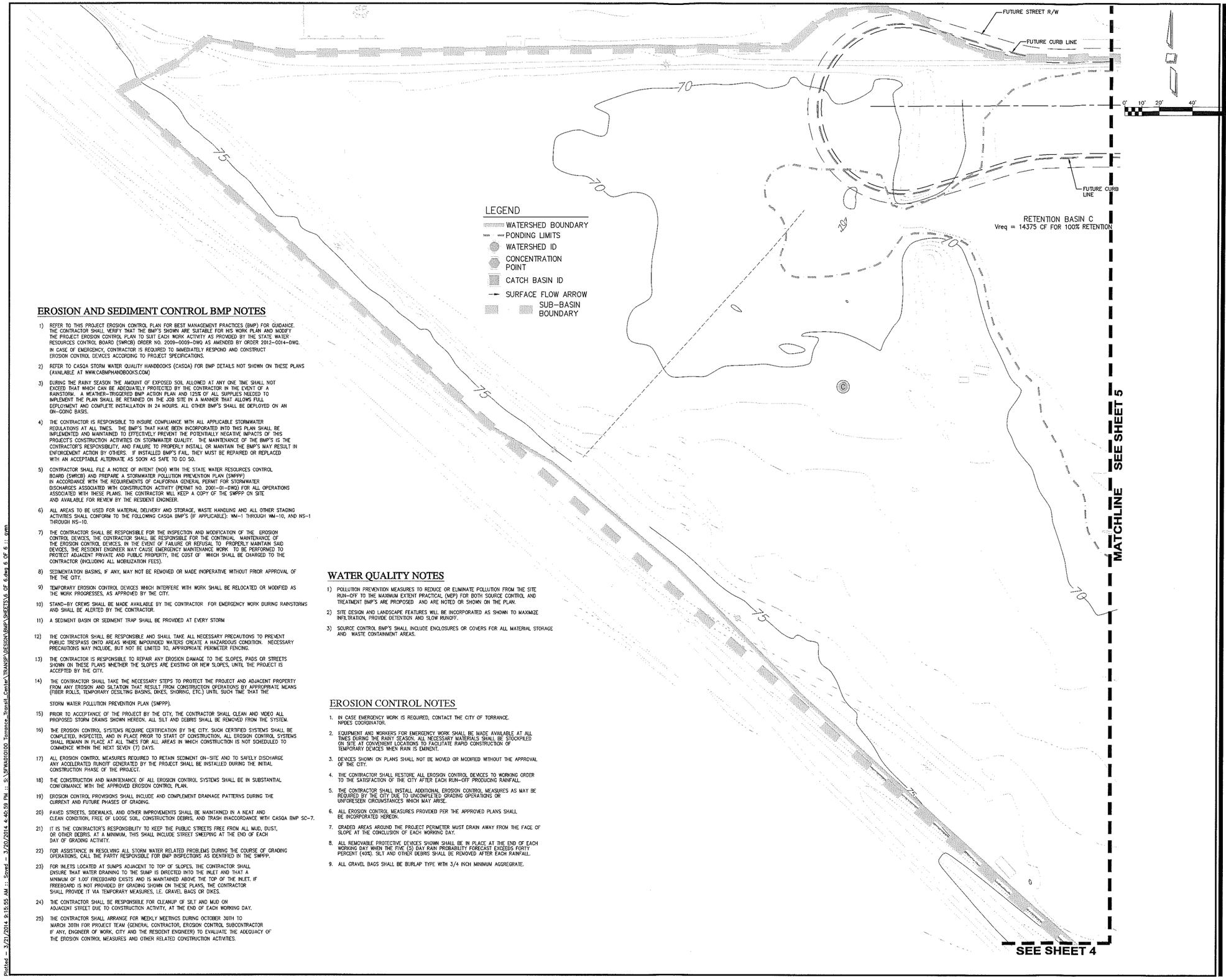

EROSION AND SEDIMENT CONTROL BMP NOTES

1) REFER TO THIS PROJECT EROSION CONTROL PLAN FOR BEST MANAGEMENT PRACTICES (BMP) FOR GUIDANCE. THE CONTRACTOR SHALL VERIFY THAT THE BMP'S SHOWN ARE SUITABLE FOR HIS WORK PLAN AND MODIFY THE PROJECT EROSION CONTROL PLAN TO SUIT EACH WORK ACTIVITY AS PROVIDED BY THE STATE WATER RESOURCES CONTROL BOARD (SWRCB) ORDER NO. 2009-0009-DWQ AS AMENDED BY ORDER 2012-0014-DWQ.
IN CASE OF EMERGENCY, CONTRACTOR IS REQUIRED TO IMMEDIATELY RESPOND AND CONSTRUCT EROSION CONTROL DEVICES ACCORDING TO PROJECT SPECIFICATIONS.

2) REFER TO CASQA STORM WATER QUALITY HANDBOOKS (CASQA) FOR BMP DETAILS NOT SHOWN ON THESE PLANS (AVAILABLE AT WWW.CABMPHANDBOOKS.COM)

3) DURING THE RAINY SEASON THE AMOUNT OF EXPOSED SOIL ALLOWED AT ANY ONE TIME SHALL NOT EXCEED THAT WHICH CAN BE ADEQUATELY PROTECTED BY THE CONTRACTOR IN THE EVENT OF A RAINSTORM. A WEATHER-TRIGGERED BMP ACTION PLAN AND 125% OF ALL SUPPLIES NEEDED TO IMPLEMENT THE PLAN SHALL BE RETAINED ON THE JOB SITE IN A MANNER THAT ALLOWS FULL DEPLOYMENT AND COMPLETE INSTALLATION IN 24 HOURS. ALL OTHER BMP'S SHALL BE DEPLOYED ON AN ON-GOING BASIS.

4) THE CONTRACTOR IS RESPONSIBLE TO INSURE COMPLIANCE WITH ALL APPLICABLE STORMWATER REGULATIONS AT ALL TIMES. THE BMP'S THAT HAVE BEEN INCORPORATED INTO THIS PLAN SHALL BE IMPLEMENTED AND MAINTAINED TO EFFECTIVELY PREVENT THE POTENTIALLY NEGATIVE IMPACTS OF THIS PROJECT'S CONSTRUCTION ACTIVITIES ON STORMWATER QUALITY. THE MAINTENANCE OF THE BMP'S IS THE CONTRACTOR'S RESPONSIBILITY, AND FAILURE TO PROPERLY INSTALL OR MAINTAIN THE BMP'S MAY RESULT IN ENFORCEMENT ACTION BY OTHERS. IF INSTALLED BMP'S FAIL, THEY MUST BE REPAIRED OR REPLACED WITH AN ACCEPTABLE ALTERNATE AS SOON AS SAFE TO DO SO.

5) CONTRACTOR SHALL FILE A NOTICE OF INTENT (NOI) WITH THE STATE WATER RESOURCES CONTROL BOARD (SWRCB) AND PREPARE A STORMWATER POLLUTION PREVENTION PLAN (SWPPP) IN ACCORDANCE WITH THE REQUIREMENTS OF CALIFORNIA GENERAL PERMIT FOR STORMWATER DISCHARGES ASSOCIATED WITH CONSTRUCTION ACTIVITY (PERMIT NO. 2001-01-DWQ) FOR ALL OPERATIONS ASSOCIATED WITH THESE PLANS. THE CONTRACTOR WILL KEEP A COPY OF THE SWPPP ON SITE AND AVAILABLE FOR REVIEW BY THE RESIDENT ENGINEER.

6) ALL AREAS TO BE USED FOR MATERIAL DELIVERY AND STORAGE, WASTE HANDLING AND ALL OTHER STAGING ACTIVITIES SHALL CONFORM TO THE FOLLOWING CASQA BMP'S (IF APPLICABLE): WM-1 THROUGH WM-10, AND NS-1 THROUGH NS-10.

7) THE CONTRACTOR SHALL BE RESPONSIBLE FOR THE INSPECTION AND MODIFICATION OF THE EROSION CONTROL DEVICES. THE CONTRACTOR SHALL BE RESPONSIBLE FOR THE CONTINUAL MAINTENANCE OF THE EROSION CONTROL DEVICES. IN THE EVENT OF FAILURE OR REFUSAL TO PROPERLY MAINTAIN SAID DEVICES, THE RESIDENT ENGINEER MAY CAUSE EMERGENCY MAINTENANCE WORK TO BE PERFORMED TO PROTECT ADJACENT PRIVATE AND PUBLIC PROPERTY, THE COST OF WHICH SHALL BE CHARGED TO THE CONTRACTOR (INCLUDING ALL MOBILIZATION FEES).

8) SEDIMENTATION BASINS, IF ANY, MAY NOT BE REMOVED OR MADE INOPERATIVE WITHOUT PRIOR APPROVAL OF THE THE CITY.

9) TEMPORARY EROSION CONTROL DEVICES WHICH INTERFERE WITH WORK SHALL BE RELOCATED OR MODIFIED AS THE WORK PROGRESSES, AS APPROVED BY THE CITY.

10) STAND-BY CREWS SHALL BE MADE AVAILABLE BY THE CONTRACTOR FOR EMERGENCY WORK DURING RAINSTORMS AND SHALL BE ALERTED BY THE CONTRACTOR.

11) A SEDIMENT BASIN OR SEDIMENT TRAP SHALL BE PROVIDED AT EVERY STORM

12) THE CONTRACTOR SHALL BE RESPONSIBLE AND SHALL TAKE ALL NECESSARY PRECAUTIONS TO PREVENT PUBLIC TRESPASS ONTO AREAS WHERE IMPOUNDED WATERS CREATE A HAZARDOUS CONDITION. NECESSARY PRECAUTIONS MAY INCLUDE, BUT NOT BE LIMITED TO, APPROPRIATE PERIMETER FENCING.

13) THE CONTRACTOR IS RESPONSIBLE TO REPAIR ANY EROSION DAMAGE TO THE SLOPES, PADS OR STREETS SHOWN ON THESE PLANS WHETHER THE SLOPES ARE EXISTING OR NEW SLOPES, UNTIL THE PROJECT IS ACCEPTED BY THE CITY.

14) THE CONTRACTOR SHALL TAKE THE NECESSARY STEPS TO PROTECT THE PROJECT AND ADJACENT PROPERTY FROM ANY EROSION AND SILTATION THAT RESULT FROM CONSTRUCTION OPERATIONS BY APPROPRIATE MEANS (FIBER ROLLS, TEMPORARY DESILTING BASINS, DIKES, SHORING, ETC.) UNTIL SUCH TIME THAT THE

STORM WATER POLLUTION PREVENTION PLAN (SWPPP).

15) PRIOR TO ACCEPTANCE OF THE PROJECT BY THE CITY, THE CONTRACTOR SHALL CLEAN AND VIDEO ALL PROPOSED STORM DRAINS SHOWN HEREON. ALL SILT AND DEBRIS SHALL BE REMOVED FROM THE SYSTEM.

16) THE EROSION CONTROL SYSTEMS REQUIRE CERTIFICATION BY THE CITY. SUCH CERTIFIED SYSTEMS SHALL BE COMPLETED, INSPECTED, AND IN PLACE PRIOR TO START OF CONSTRUCTION. ALL EROSION CONTROL SYSTEMS SHALL REMAIN IN PLACE AT ALL TIMES FOR ALL AREAS IN WHICH CONSTRUCTION IS NOT SCHEDULED TO COMMENCE WITHIN THE NEXT SEVEN (7) DAYS.

17) ALL EROSION CONTROL MEASURES REQUIRED TO RETAIN SEDIMENT ON-SITE AND TO SAFELY DISCHARGE ANY ACCELERATED RUNOFF GENERATED BY THE PROJECT SHALL BE INSTALLED DURING THE INITIAL CONSTRUCTION PHASE OF THE PROJECT.

18) THE CONSTRUCTION AND MAINTENANCE OF ALL EROSION CONTROL SYSTEMS SHALL BE IN SUBSTANTIAL CONFORMANCE WITH THE APPROVED EROSION CONTROL PLAN.

19) EROSION CONTROL PROVISIONS SHALL INCLUDE AND COMPLEMENT DRAINAGE PATTERNS DURING THE CURRENT AND FUTURE PHASES OF GRADING.

20) PAVED STREETS, SIDEWALKS, AND OTHER IMPROVEMENTS SHALL BE MAINTAINED IN A NEAT AND CLEAN CONDITION, FREE OF LOOSE SOIL, CONSTRUCTION DEBRIS, AND TRASH INACCORDANCE WITH CASQA BMP SC-7.

21) IT IS THE CONTRACTOR'S RESPONSIBILITY TO KEEP THE PUBLIC STREETS FREE FROM ALL MUD, DUST, OR OTHER DEBRIS. AT A MINIMUM, THIS SHALL INCLUDE STREET SWEEPING AT THE END OF EACH DAY OF GRADING ACTIVITY.

22) FOR ASSISTANCE IN RESOLVING ALL STORM WATER RELATED PROBLEMS DURING THE COURSE OF GRADING OPERATIONS, CALL THE PARTY RESPONSIBLE FOR BMP INSPECTIONS AS IDENTIFIED IN THE SWPPP.

23) FOR INLETS LOCATED AT SUMPS ADJACENT TO TOP OF SLOPES, THE CONTRACTOR SHALL ENSURE THAT WATER DRAINING TO THE SUMP IS DIRECTED INTO THE INLET AND THAT A MINIMUM OF 1.00' FREEBOARD EXISTS AND IS MAINTAINED ABOVE THE TOP OF THE INLET. IF FREEBOARD IS NOT PROVIDED BY GRADING SHOWN ON THESE PLANS, THE CONTRACTOR SHALL PROVIDE IT VIA TEMPORARY MEASURES, I.E. GRAVEL BAGS OR DIKES.

24) THE CONTRACTOR SHALL BE RESPONSIBLE FOR CLEANUP OF SILT AND MUD ON ADJACENT STREET DUE TO CONSTRUCTION ACTIVITY, AT THE END OF EACH WORKING DAY.

25) THE CONTRACTOR SHALL ARRANGE FOR WEEKLY MEETINGS DURING OCTOBER 30TH TO MARCH 30TH FOR PROJECT TEAM (GENERAL CONTRACTOR, EROSION CONTROL SUBCONTRACTOR IF ANY, ENGINEER OF WORK, CITY AND THE RESIDENT ENGINEER) TO EVALUATE THE ADEQUACY OF THE EROSION CONTROL MEASURES AND OTHER RELATED CONSTRUCTION ACTIVITIES.

WATER QUALITY NOTES

1) POLLUTION PREVENTION MEASURES TO REDUCE OR ELIMINATE POLLUTION FROM THE SITE RUN-OFF TO THE MAXIMUM EXTENT PRACTICAL (MEP) FOR BOTH SOURCE CONTROL AND TREATMENT BMP'S ARE PROPOSED AND ARE NOTED OR SHOWN ON THE PLAN.

2) SITE DESIGN AND LANDSCAPE FEATURES WILL BE INCORPORATED AS SHOWN TO MAXIMIZE INFILTRATION, PROVIDE DETENTION AND SLOW RUNOFF.

3) SOURCE CONTROL BMP'S SHALL INCLUDE ENCLOSURES OR COVERS FOR ALL MATERIAL STORAGE AND WASTE CONTAINMENT AREAS.

EROSION CONTROL NOTES

1. IN CASE EMERGENCY WORK IS REQUIRED, CONTACT THE CITY OF TORRANCE. NPDES COORDINATOR.
2. EQUIPMENT AND WORKERS FOR EMERGENCY WORK SHALL BE MADE AVAILABLE AT ALL TIMES DURING THE RAINY SEASON. ALL NECESSARY MATERIALS SHALL BE STOCKPILED ON SITE AT CONVENIENT LOCATIONS TO FACILITATE RAPID CONSTRUCTION OF TEMPORARY DEVICES WHEN RAIN IS EMINENT.
3. DEVICES SHOWN ON PLANS SHALL NOT BE MOVED OR MODIFIED WITHOUT THE APPROVAL OF THE CITY.
4. THE CONTRACTOR SHALL RESTORE ALL EROSION CONTROL DEVICES TO WORKING ORDER TO THE SATISFACTION OF THE CITY AFTER EACH RUN-OFF PRODUCING RAINFALL.
5. THE CONTRACTOR SHALL INSTALL ADDITIONAL EROSION CONTROL MEASURES AS MAY BE REQUIRED BY THE CITY DUE TO UNCOMPLETED GRADING OPERATIONS OR UNFORESEEN CIRCUMSTANCES WHICH MAY ARISE.
6. ALL EROSION CONTROL MEASURES PROVIDED PER THE APPROVED PLANS SHALL BE INCORPORATED HEREON.
7. GRADED AREAS AROUND THE PROJECT PERIMETER MUST DRAIN AWAY FROM THE FACE OF SLOPE AT THE CONCLUSION OF EACH WORKING DAY.
8. ALL REMOVABLE PROTECTIVE DEVICES SHOWN SHALL BE IN PLACE AT THE END OF EACH WORKING DAY WHEN THE FIVE (5) DAY RAIN PROBABILITY FORECAST EXCEEDS FORTY PERCENT (40%). SILT AND OTHER DEBRIS SHALL BE REMOVED AFTER EACH RAINFALL.
9. ALL GRAVEL BAGS SHALL BE BURLAP TYPE WITH 3/4 INCH MINIMUM AGGREGRATE.

FRANK R. WEBB ARCHITECTS
www.frwebb.com Los Angeles | Fullerton

5607 Vanden Boulevard Los Angeles, CA 90034
tel: 310. 559. 4717 fax: 310. 559. 4174

THESE DRAWINGS AND SPECIFICATIONS AND IDEAS, DESIGNS AND ARRANGEMENTS REPRESENTED THEREIN ARE AND SHALL REMAIN THE PROPERTY OF THE ARCHITECT; NO PART THEREOF SHALL BE COPIED, DISCLOSED TO OTHERS, OR USED IN CONNECTION WITH ANY WORK OR PROJECT OTHER THAN THE SPECIFIED PROJECT FOR WHICH THEY HAVE BEEN PREPARED AND DEVELOPED WITHOUT THE WRITTEN CONSENT OF THE ARCHITECT. VISUAL CONTACT WITH THESE DRAWINGS OR SPECIFICATIONS SHALL CONSTITUTE CONCLUSIVE EVIDENCE OF ACCEPTANCE OF THESE RESTRICTIONS.

No.	Distribution/Revision	Date
	30% Design Review/Cost Estimate	8.15.2013
	65% Construction Documents	11.15.2013
	City Submittal	12.17.2013
	95% Construction Documents	1.7.2014

PSOMAS
3111 Camino Del Rio North, Suite 702
San Diego, CA 92108
(619) 961-2800 (619) 961-2392 fax
www.psomas.com

City of Torrance
Torrance Transit Park & Ride
Regional Terminal
465 Crenshaw Blvd.
Torrance, CA 90503

Torrance Transit Park and Ride Regional Terminal

CLIENT PROJECT #:B2013-15

Drawing Title: SITE MAP- WATER POLLUTION CONTROL PLAN (BMP'S TO BE INSTALLED AS WORK PROGRESSES)

Scale: 1"=20'
IF DRAWING IS NOT 30X42 THEN IT IS NOT TO SCALE

Drawn by: LA
Project Manager: KF
Project No.: 13025
Date Plotted: 12/17/2013

Drawing No. 6 of 6

Plotted - 3/21/2014 9:15:55 AM :: Saved - 3/20/2014 4:40:59 PM :: S:\SFWA01000 Torrance_Transit_Center\TRANSP\DESIGN\BMP\SHEETS\6 OF 6.dwg 6 OF 6 :: sysm

CITY OF TORRANCE
LOS ANGELES COUNTY, CALIFORNIA

ADVANCED / ROUGH GRADING PLANS FOR THE

TORRANCE TRANSIT PARK & RIDE REGIONAL TERMINAL

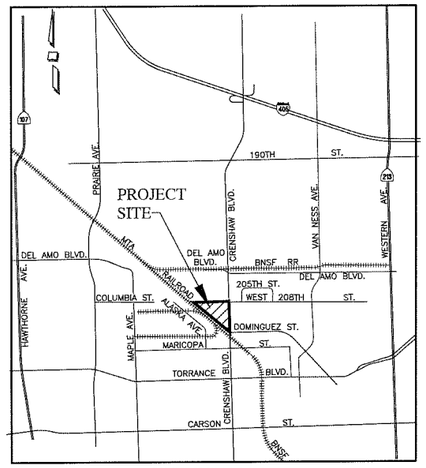

VICINITY MAP
N.T.S.

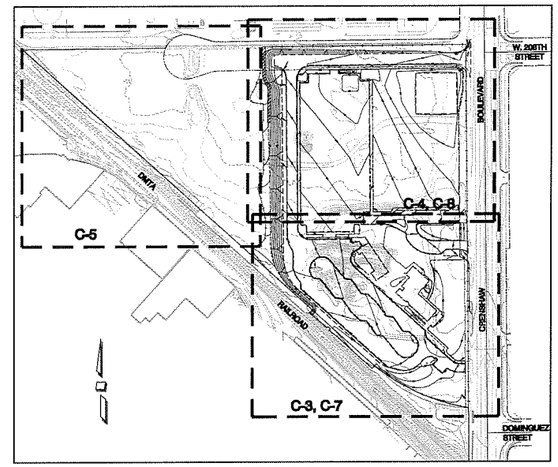

KEY MAP
SCALE: 1=150'

SURVEY MONUMENTS

CONTRACTOR SHALL BE RESPONSIBLE FOR ANY MONUMENTATION AND/OR BENCHMARKS THAT ARE DISTURBED OR DESTROYED BY CONSTRUCTION. SUCH POINTS SHALL BE REFERENCED AND REPLACED WITH APPROPRIATE MONUMENTATION BY A LICENSED LAND SURVEYOR OR REGISTERED ENGINEER AUTHORIZED TO PRACTICE LAND SURVEYING. A CORNER RECORD OF SURVEY AS APPROPRIATE, SHALL BE FILED BY THE LICENSED LAND SURVEYOR OR REGISTERED CIVIL ENGINEER AS REQUIRED BY THE LAND SURVEYOR'S ACT FOR ANY REPLACED MONUMENTATION.

BASIS OF BEARINGS

THE BEARING N00°23'03"W OF THE CENTERLINE OF CRENSHAW BOULEVARD, SHOWN AS N00°34'10"W ON RECORD OF SURVEY FILED IN BOOK 230, PAGE 47 OF RECORDS OF SURVEYS, RECORDS OF LOS ANGELES COUNTY, WAS TAKEN AS THE BASIS OF BEARINGS SHOWN ON THIS MAP.

LEGAL DESCRIPTION

THAT PORTION OF LOT 8 OF TRACT NO. 7873, IN THE CITY OF TORRANCE, COUNTY OF LOS ANGELES, STATE OF CALIFORNIA, AS PER MAP RECORDED IN BOOK 108, PAGES 99 AND 100 OF MAPS, IN THE OFFICE OF THE COUNTY RECORDER OF SAID COUNTY, AND A PORTION OF PARCEL 130 OF SUBDIVISION OF PORTIONS OF THE 730.61 ACRE TRACT ALLOTTED TO SUSANA DOMINGUEZ BY A FINAL DECREE OF PARTITION OF A PORTION OF THE RANCHO SAN PEDRO IN CASE NO. 3284 OF THE SUPERIOR COURT OF LOS ANGELES COUNTY, DESCRIBED AS A WHOLE AS FOLLOWS:

BEGINNING AT THE MOST SOUTHERLY CORNER OF SAID LOT 8; THENCE NORTH 00 DEGREES 34 MINUTES 10 SECONDS WEST ON AND ALONG THE EAST LINE OF SAID LOT 8, 981.22 FEET; THENCE SOUTH 89 DEGREES 25 MINUTES 50 SECONDS WEST 1204.43 FEET, MORE OR LESS, TO A LINE THAT IS PARALLEL WITH AND DISTANT 5 FEET NORTHEASTERLY AT RIGHT ANGLES FROM THE NORTHEASTERLY BOUNDARY LINE OF THE RIGHT OF WAY OF THE ATCHISON, TOPEKA AND SANTA FE RAILWAY COMPANY, AS CONVEYED TO SANTA FE AND LOS ANGELES HARBOR RAILWAY COMPANY, BY DEED OF EASEMENT RECORDED OCTOBER 9, 1942 AS INSTRUMENT NO. 1327 IN BOOK 19635, PAGE 64, OFFICIAL RECORDS; THENCE SOUTH 48 DEGREES 00 MINUTES 00 SECONDS EAST 1247.12 FEET, MORE OR LESS, ALONG SAID PARALLEL LINE AND THE SOUTHEASTERLY PROLONGATION THEREOF TO THE BEGINNING OF A TANGENT CURVE CONCAVE NORTHEASTERLY HAVING A RADIUS OF 546.438 FEET AND WHICH PASSES THROUGH THE POINT OF BEGINNING; THENCE SOUTHEASTERLY ALONG SAID CURVE A DISTANCE OF 321.98 FEET TO THE POINT OF BEGINNING.

APN

7352-002-008

BENCHMARK

BENCH MARK: Y10874

DPW BM TAG IN E CB 1M(3.3FT)
N/O BCR @ NE COR CRENSHAW
BLVD & 208TH ST

TORRANCE QUAD 2005 EL. 72.904

SOURCE OF TOPOGRAPHY

PHOTOGRAMMETRIC TOPOGRAPHY PROVIDED BY: PSOMAS
DATED: 09/10/2013

EROSION CONTROL

THE CONTRACTOR IS RESPONSIBLE TO REPAIR ANY EROSION DAMAGE TO THE SLOPES, PADS OR STREETS SHOWN ON THESE PLANS WHETHER THE SLOPES ARE EXISTING OR NEW SLOPES, UNTIL THE PROJECT IS ACCEPTED BY THE CITY ENGINEER.

LIST OF DRAWINGS

SHEET No.	DESCRIPTION
C-1	TITLE SHEET
C-2	NOTES AND LEGENDS
C-3 THRU C-5	ADVANCED/ROUGH GRADING PLANS
C-6	SITE SECTIONS
C-7 THRU C-8	HORIZONTAL CONTROL PLAN
C-9	DETAILS

FOR EROSION AND WATER POLLUTION CONTROL PLANS, SEE THE SWPPP PREPARED FOR THIS PROJECT.

No.	Distribution/Revision	Date

PSOMAS
3111 Camino Del Rio North, Suite 702
San Diego, CA 92108
(619) 961-2600 (619) 961-2392 fax
www.psomas.com

City of Torrance
Torrance Transit Park & Ride
Regional Terminal
465 Crenshaw Blvd.
Torrance, CA 90503

Torrance Transit Park and Ride Regional Terminal

CLIENT PROJECT #:B2013-15

Drawing Title

TITLE SHEET

Scale: AS SHOWN
IF DRAWING IS NOT 30X42 THEN IT IS NOT TO SCALE

Drawing No.

C-1

Project Manager: LA
Project No: JSB
Date Placed: 13025

Plotted - 6/29/2015 11:04:02 AM :: Saved - 5/4/2015 3:45:36 PM :: S:\SFWA010100 Torrance_Transit_Center\TRANSP\SHEETS\Advanced GP\C-1 TS.dwg C-1 :: gyen

GENERAL NOTES

1. ALL WORK SHALL BE DONE IN ACCORDANCE WITH THE STANDARD SPECIFICATIONS FOR PUBLIC WORKS CONSTRUCTION, LATEST EDITION AND SUPPLEMENTS THERETO, AS WRITTEN AND PROMULGATED BY PUBLIC WORKS STANDARDS, INC., HEREINAFTER REFERRED TO AS THE STANDARD SPECIFICATIONS, THE TORRANCE STANDARDS, THE AMERICAN WATER WORKS ASSOCIATION STANDARDS LATEST EDITION, AND TO THE SATISFACTION OF THE ENGINEERING DIRECTOR.

2. IT SHALL BE THE RESPONSIBILITY OF THE CONTRACTOR TO LOCATE, VERIFY DEPTH AND PROTECT ALL STRUCTURES, INCLUDING SUBSTRUCTURES, SHOWN ON THE PLAN. THE CONTRACTOR SHALL BEAR THE ENTIRE COST OF REPAIRING OR REPLACING ANY OF SAID STRUCTURES DAMAGED BY HIM/HER DURING PROSECUTION OF THE WORK. ALL REPAIRS AND REPLACEMENTS SHALL BE DONE IN THE PRESENCE OF THE INSPECTOR. ALL LOCATIONS SHOWN ON THE PLAN FOR UTILITY LINES HAVE BEEN TAKEN FROM AVAILABLE RECORDS AND THEIR COMPLETENESS AND CORRECTNESS ARE IN NO WAY GUARANTEED.

3. THE CONTRACTOR SHALL NOTIFY UNDERGROUND SERVICE ALERT (USA) AT 1-800-227-2600 AND ALL PUBLIC UTILITY COMPANIES AND OWNERS OF PRIVATE FACILITIES WITHIN THE AREA OF CONSTRUCTION AT LEAST 2 WORKING DAYS IN ADVANCE OF PERFORMING ANY WORK WITHIN SAID AREA.

4. THE CONTRACTOR SHALL OBTAIN ALL NECESSARY PERMITS FROM THE ENGINEERING DIRECTOR BEFORE COMMENCING WORK. TRAFFIC CONTROL WITHIN PUBLIC STREET RIGHTS OF WAY SHALL BE IN CONFORMANCE WITH THE "CONSTRUCTION TRAFFIC CONTROL PROCEDURES ON CITY STREETS", LATEST EDITION AVAILABLE AT THE ENGINEERING DEPARTMENT. THE CONTRACTOR SHALL PROVIDE A 24-HOUR TELEPHONE NUMBER FOR EMERGENCY REPAIRS TO TRAFFIC CONTROL AND PAVEMENT MARKINGS.

5. CAUTION: REVIEW APPROVED CONSTRUCTION PLAN. IF CONSTRUCTION REQUIRES WORKERS AND/OR EQUIPMENT TO BE WITHIN 6 FEET OR CRANES OR HOISTING DEVICES TO BE WITHIN 10 FEET OF OVERHEAD ELECTRIC LINES, CALL SOUTHERN CALIFORNIA EDISON AT 310-783-9339 FOR PROJECTS IN RESIDENTIAL AREAS OR 310-783-9331 FOR PROJECTS IN COMMERCIAL AREAS.

6. PRIOR TO COMMENCEMENT OF WORK, ALL SURVEY MONUMENTS IN THE PROJECT AREA SHALL BE LOCATED AND TIED OUT. ALL CENTERLINE MONUMENTS OR TIES LOST OR DESTROYED BY THIS WORK SHALL BE REPLACED EITHER BY A LICENSED SURVEYOR OR A CIVIL ENGINEER REGISTERED PRIOR TO JANUARY 1, 1982 AND NEW TIE SHEETS PROVIDED. METHOD OF ESTABLISHMENT SHALL BE STATED ON THE TIE SHEET.

7. GRADE SHEETS PREPARED AND STAMPED BY A LICENSED ENGINEER OR SURVEYOR SHALL BE DELIVERED TO THE INSPECTOR PRIOR TO COMMENCEMENT OF WORK.

8. THE CONTRACTOR SHALL NOTIFY THE CITY STREET DEPARTMENT AT 310-781-6900 PRIOR TO TRIMMING, REMOVING OR RELOCATING ANY EXISTING TREES.

9. UNLESS OTHERWISE SHOWN, ALL TRAFFIC SIGNS SHALL BE RELOCATED OR REMOVED BY THE CITY. THE CONTRACTOR SHALL NOTIFY THE STREET DEPARTMENT AT 310-781-6900 AT LEAST 2 WORKING DAYS IN ADVANCE TO ARRANGE THE WORK.

STORM DRAIN NOTES:

1. STORM DRAIN CONNECTIONS TO THE L.A. COUNTY STORM DRAIN SYSTEM REQUIRE A PERMIT FROM L.A. COUNTY (1-626-458-3129) BEFORE ISSUANCE OF A CITY PERMIT.

2. IN CASE OF CONFLICT BETWEEN A CONNECTOR PIPE AND AN EXISTING UNDERGROUND LINE, THE CONNECTOR PIPE MAY BE REALIGNED OVER OR UNDER THE CONFLICTING LINE. CONNECTOR PIPE GRADES SHALL DRAIN POSITIVELY TOWARD THE MAIN LINE, AND WHERE GRADE BREAKS EXCEED FIVE DEGREES A CONCRETE COLLAR PER A.P.W.A. STD. DRAWING 380 SHALL BE CONSTRUCTED. APPROVAL FOR REALIGNMENT SHALL BE OBTAINED FROM THE COMMUNITY DEVELOPMENT/PUBLIC WORKS DIRECTOR PRIOR TO COMMENCEMENT OF WORK.

3. MANHOLE AND CATCH BASIN COVERS SHALL BE CAST WITH THE WORDS "TORRANCE DRAIN" FOR CITY MAINTAINED LINES AND "PRIVATE DRAIN" FOR PRIVATELY MAINTAINED LINES.

4. DURING NON-CONSTRUCTION HOURS, ALL EXCAVATIONS MUST BE APPROPRIATELY SHORED, PLATED OR BACKFILLED EXCEPT BORE PITS WHICH SHALL BE SECURED WITH K-RAIL AND 6' HIGH CHAIN LINK FENCE PANELS SECURED IN PLACE TO THE SATISFACTION OF THE PUBLIC WORKS INSPECTOR. STEEL PLATES SHALL BE TACK WELDED, PINNED AND/OR SECURED IN PLACE BY ANOTHER METHOD APPROVED BY THE INSPECTOR.

GRADING NOTES:

1. GRADING PLAN OPERATIONS SHALL BE IN ACCORDANCE WITH THE CODE OF THE CITY OF TORRANCE AND ALL REVISIONS THERETO.

2. A PRE-JOB MEETING WITH THE CITY GRADING INSPECTOR, (310) 618-5915, IS REQUIRED PRIOR TO THE START OF GRADING OPERATIONS. SUBSEQUENT INSPECTIONS SHALL BE REQUESTED IN ACCORDANCE WITH THE INSPECTOR'S INSTRUCTIONS OF THE FIRST INSPECTION.

3. ESTIMATED EARTHWORK IN YARDAGE INCLUDING RECOMPACTION OF SUMPS OR EXISTING LOOSE FILL:

FILL IN LOTS:	48,340 CUBIC YARDS	MAXIMUM DEPTH OF FILL:	15 FEET
CUT IN LOTS:	6,480 CUBIC YARDS	MAXIMUM DEPTH OF CUT:	7 FEET
OVEREXCAVATION AND RECOMPACTION:	11,615 CUBIC YARDS		1 FEET
PAVING AREA	0 SF		

4. EXISTING GROUND UPON WHICH FILL OR BASE IS TO BE PLACES SHALL BE CLEARED OF WEEDS, DEBRIS, TOPSOIL, AND OTHER DELETERIOUS MATERIALS; NO FILL SHALL BE PLACED UNTIL PREPARATION OF THE EXISTING GROUND HAS BEEN APPROVED BY THE OWNER'S SOILS ENGINEER OF RECORD AND BY THE CITY INSPECTOR.

5. PROTECTIVE MEASURES SHALL BE TAKEN BY THE CONTRACTOR AND THE OWNER TO PROTECT THE ADJACENT PROPERTY, PUBLIC AND UTILITIES DURING GRADING OPERATIONS. THE CONTRACTOR ASSUMES ALL LIABILITY FOR THE UNDERGROUND UTILITY PIPES, CONDUITS OR STRUCTURES, WHETHER SHOWN OR NOT ON THE PLAN.

6. WATER CONTENT SHALL BE CONTROLLED AS DETERMINED BY THE OWNER'S SOILS ENGINEER AND THE CITY INSPECTOR.

7. PERMISSION SHALL BE SECURED FROM THE ENGINEERING DEPARTMENT IF THE TRUCKS ARE LOADED IN THE STREET.

8. UNSUITABLE MATERIAL SHALL BE DISPOSED OF OFF-SITE. THE LOCATION OF DUMPING EXCESS SOIL SHALL BE APPROVED BY THE GRADING INSPECTOR PRIOR TO STARTING EXCAVATION.

9. LOOSE MATERIAL SHALL NOT EXCEED 3" IN DEPTH ON A FILLED SLOPE.

10. ALL SLOPES SO DESIGNATED SHALL BE PLANTED WITH AN APPROVED PERENNIAL FOR EROSION CONTROL. PLANTING SHALL BE SPRINKLERED AND MAINTAINED UNTIL PLANTING HAS REACHED MATURE GROWTH.

11. ALL LOOSE ON SITE FILL SHALL BE REMOVED AND COMPACTED.

12. ALL WORK SHALL BE ACCOMPLISHED IN ACCORDANCE WITH RECOMMENDATIONS SET FORTH IN THE SOILS REPORT DATED APRIL 14, 2014 BY DIAZ-YOURMAN & ASSOCIATES.

13. ALL MAN MADE FILL SHALL BE COMPACTED TO A MINIMUM 90 PERCENT OF THE MAXIMUM DRY DENSITY OF THE FILL MATERIAL PER THE LATEST VERSION OF ASTM D1557.

14. SUFFICIENT TESTING OF THE FILL SOIL SHALL BE MADE THE CITY TO DETERMINE THE RELATIVE COMPACTION OF THE FILL IN ACCORDANCE WITH THE FOLLOWING MINIMUM GUIDELINES:
    A. ONE TEST FOR EACH TWO FEET OF VERTICAL LIFT.
    B. ONE TEST FOR EACH 500 CUBIC YARDS OF MATERIAL PLACED.
    C. ONE TEST AT THE LOCATION OF THE FINAL FILL SLOPE FOR EACH BUILDING SITE IN EACH FOUR FOOT VERTICAL LIFT OR PORTION THEREOF.
    D. ONE TEST IN THE VICINITY OF EACH BUILDING PAD FOR EACH FOUR FOOT VERTICAL LIFT OR PORTION THEREOF.

15. IMPORT SOILS SHOULD CONSIST OF CLEAN, COMPACTABLE MATERIALS POSSESSING EXPANSION CHARACTERISTICS SIMILAR TO OR BETTER THAN THE UPPER ON-SITE SOILS. IMPORT SOILS SHOULD BE FREE OF TRASH, DEBRIS OR OTHER OBJECTIONABLE MATERIALS. CONTRACTOR SHALL NOTIFY THE CITY PROJECT GEOTECHNICAL ENGINEER NOT LESS THAN 72 HOURS IN ADVANCE OF THE LOCATION OF ANY SOILS PROPOSED FOR IMPORT. EACH PROPOSED IMPORT SOURCE SHALL BE SAMPLED, TESTED, AND APPROVED PRIOR TO DELIVERY OF SOILS FOR USE ON THE SITE.

16. ALL FILL UNDER THE BUILDING FOUNDATION MUST BE CERTIFIED BY THE OWNER'S SOILS ENGINEER AS TO PROPER BEARING VALUE DESIGN AND ITS COMPLIANCE WITH THE PRELIMINARY SOILS REPORT ON NOTE 12.

17. ALL SUBGRADE UNDER AREAS TO BE PAVED SHALL BE CERTIFIED BY THE SOILS ENGINEER IN COMPLIANCE WITH SECTION 81.2.34(g) OF THE TORRANCE MUNICIPAL CODE.

18. THE OWNER'S ENGINEERING GEOLOGIST, SOILS ENGINEER, AND CIVIL ENGINEER, IN COMPLIANCE WITH SECTION 81.2.37(g) OF THE TORRANCE MUNICIPAL CODE, SHALL PROVIDE THE DEPARTMENT WITH A GRADING CERTIFICATION UPON COMPLETION OF THE JOB.

19. AN AS-GRADED PLAN PREPARED BY THE CIVIL ENGINEER OF RECORD SHALL BE SUBMITTED WITH THE REQUIRED GRADING CERTIFICATIONS TO THE DEPERTMENT UPON JOB COMPLETION.

20. APPROVAL OF THIS PLAN IS FOR GRADING AND PAVING ON-SITE ONLY AND DOES NOT CONSTITUTE APPROVAL OF ANY BUILDING, WALL OR OTHER STRUCTURE SHOWN ON SITE NOR ANY OFF-SITE IMPROVEMENTS SHOWN.

21. NO FILL SHALL BE PLACED DURING UNFAVORABLE WEATHER CONDITIONS. THE OWNER'S SOILS ENGINEER AND GRADING INSPECTOR SHALL VERIFY MOISTURE CONTENT AND DENSITY PRIOR TO PLACEMENT OF ADDITIONAL FILL AFTER HEAVY RAINS.

22. ALL CONSTRUCTION IN PUBLIC RIGHT-OF-WAY SHALL BE UNDER SEPARATE PERMIT AND APPROVED BY THE ENGINEERING DIVISION.

ABBREVIATIONS

ALL ABBREVIATIONS ARE PER SECTION 1-3 OF THE GREEN BOOK WITH THE ADDITIONS INDICATED BELOW:

ABAND	ABANDONED	MAT'L	MATERIAL
ASS'Y	ASSEMBLY	MIN	MINIMUM
BFD	BACKFLOW DEVICE	MJ	MECHANICAL JOINT
BO	BLOW-OFF	N.I.C.	NOT A PART OF THIS CONTRACT
CATV	CABLE TV		
COMB	COMBINATION	O/H	OVERHEAD
DI	DRAIN INLET	PVC	POLYVINYL CHLORIDE
DG	DECOMPOSED GRANITE	RSD	REGIONAL STANDARD DRAWINGS
E	ELECTRIC		
ELEV	ELEVATION	RT	RIGHT
EXIST.	EXISTING	R/W	RIGHT-OF-WAY
EJ	EXPANSION JOINT	SMH	SEWER MANHOLE
FH	FIRE HYDRANT	SWQ	STORM WATER QUALITY
FLG/FLG'D	FLANGE/FLANGED	SWR	SEWER
FS	FINISHED SURFACE	T	TELEPHONE
GV	GATE VALVE	TB	TOP OF BERM
HDPE	HIGH DENSITY POLYETHYLENE	TG	TOP OF GRATE
		TP	TOP OF PIPE
HP	HIGH PRESSURE	U/G	UNDERGROUND
INT	INTERSECTION	WM	WATER METER
IE	INVERT ELEVATION	WTR	WATER
LT	LEFT		

ENGINEER'S NOTICE TO CONTRACTORS

THE EXISTENCE AND LOCATION OF ANY UNDERGROUND UTILITY PIPES OR STRUCTURES SHOWN ON THESE PLANS WERE OBTAINED BY A SEARCH OF AVAILABLE RECORDS. THESE LOCATIONS ARE APPROXIMATE AND SHALL BE CONFIRMED IN THE FIELD BY THE CONTRACTOR, SO THAT ANY NECESSARY ADJUSTMENT CAN BE MADE IN ALIGNMENT AND/OR GRADE OF THE PROPOSED IMPROVEMENT. THE CONTRACTOR IS REQUIRED TO TAKE DUE PRECAUTIONARY MEASURE TO PROTECT ANY UTILITY LINES SHOWN AND ANY OTHER LINES NOT OF RECORD OR NOT SHOWN ON THESE PLANS.

PRIVATE ENGINEERING NOTE

CONSTRUCTION CONTRACTOR AGREES THAT IN ACCORDANCE WITH GENERALLY ACCEPTED CONSTRUCTION PRACTICES, CONSTRUCTION CONTRACTOR WILL BE REQUIRED TO ASSUME SOLE AND COMPLETE RESPONSIBILITY FOR JOB SITE CONDITIONS DURING THE COURSE OF CONSTRUCTION OF THE PROJECT, INCLUDING SAFETY OF ALL PERSONS AND PROPERTY, THAT THIS REQUIREMENT SHALL BE MADE TO APPLY CONTINUOUSLY AND NOT TO BE LIMITED TO NORMAL WORKING HOURS, AND CONSTRUCTION CONTRACTOR FURTHER AGREES TO DEFEND, INDEMNIFY AND HOLD THE CITY OF TORRANCE AND DESIGN PROFESSIONAL HARMLESS FROM ANY AND ALL LIABILITY, REAL OR ALLEGED, IN CONNECTION WITH THE PERFORMANCE OF WORK ON THIS PROJECT, EXCEPTING LIABILITY ARISING FROM THE SOLE NEGLIGENCE OF THE CITY OF TORRANCE AND/OR DESIGN PROFESSIONAL.

GEOTECHNICAL REPORT

A GEOTECHNICAL REPORT ENTITLED "GEOTECHNICAL INVESTIGATION, TORRANCE TRANSIT PARK & RIDE REGIONAL TERMINAL – PHASE II, 465 CRENSHAW BLVD., TORRANCE, CALIFORNIA" PREPARED BY "DIAZ YOURMAN & ASSOCIATES" DATED APRIL 14, 2014 HAS BEEN PREPARED FOR THIS PROJECT AND IS AVAILABLE FOR REVIEW BY THE CONTRACTOR FOR REFERENCE AT THE OFFICE OF THE CITY ENGINEER.

SWPPP NOTE

CONTRACTOR SHALL BE RESPONSIBLE FOR ACHEARING TO THE PROVISIONS SET FOR THE BY THE STORM WATER POLLUTION PREVENTION PLAN (SWPPP) FOR THIS PROJECT. CONTRACTOR TO PROVIDE APPLICATION FOR GRADING PERMIT TO CITY PRIOR TO ANY SOIL DISTURBANCE. CONTRACTOR MUST MAINTAIN THE SERVICES OF A QUALIFIED SWPPP PRACTITIONER (QSP) DURING WORK OPERATIONS TO MONITOR OR THE WORK AND PROVIDE REQUIRED REPORTING INTO SMARTS.

NATIONAL POLLUTION DISCHARGE ELIMINATION SYSTEM (NPDES) REQUIREMENTS

1. OWNER SHALL KEEP THE CONSTRUCTION AREA SUFFICIENTLY DAMPENED TO CONTROL DUST CAUSED BY GRADING AND CONSTRUCTION. OWNER SHALL, AT ALL TIMES, PROVIDE REASONABLE CONTROL OF DUST CAUSED BY WIND.

2. THE EXPORT OR IMPORT MATERIAL IN EACH TRUCKLOAD SHALL BE KEPT LOW ENOUGH TO PREVENT SPILLAGE AND SHALL BE SUFFICIENTLY WET DOWN TO PREVENT DUST.

3. A STAGING AREA SHALL BE DESIGNATED WHERE EACH TRUCK IS PREPARED FOR ROAD TRAVEL AND ALL LOOSE MATERIAL REMOVED. AND SUBSTANCE TO DROP FROM THE BODY, TIRES, OR WHEELS OF ANY VEHICLE UPON THE PUBLIC RIGHT-OF-WAY SHALL BE REMOVED IMMEDIATELY AND PERMANENTLY.

4. EROSION CONTROL MEASURES SHALL BE IN PLACE FROM NOVEMBER 15 THROUGH APRIL 15.

TOXIC SUBSTANCES NOTE

PRIOR TO EXECUTING ANY EARTHWORK OR IMPORT OF MATERIAL TO THE SITE, THE CONTRACTOR MUST ESTABLISH COMMUNICATION AND NOTIFY DTSC OF ALL EARTHWORK ACTIVATES. THE CONTRACTOR IS RESPONSIBLE TO PROVIDE TECHNICAL REPORTS TO CONFIRM THAT IMPORTED MATERIALS DO NOT EXCEED HAZARDOUS LEVELS ALLOWABLE BY U.S. EPA REGIONAL SCREENING LEVELS (RSL'S). REPORTS WILL BE PROVIDED AT THE CONTRACTORS EXPENSE AS A COMPONENT OF THE SCOPE OF WORK AND WILL BE AUTHORED BY A LAB CERTIFIED BY THE CALIFORNIA ENVIRONMENTAL LABORATORY ACCREDITATION PROGRAM (ELAP). REPORTS ARE TO BE REVIEWED, CONFIRMED AND SIGNED BY THE CITY AND/OR THEIR AUTHORIZED REPRESENTATIVE AND APPROVED BY DTSC PRIOR TO IMPORT. THE CONTRACTOR IS RESPONSIBLE TO FACILITATE THE COMMUNICATION, REVIEW AND APPROVALS BY THE CITY CONTRACTED GEOTECHNICAL ENGINEER AND DTSC IN A TIMELY MANNER IN LINE WITH THEIR PROPOSED SCHEDULE. ALL IMPORT ACTIVITIES MUST BE IN COMPLIANCE WITH PROCEDURES DEFINED ON THE DTSC INFORMATION ADVISORY CLEAN IMPORTED FILL MATERIAL WEB SITE:

HTTPS://WWW.DTSC.CA.GOV/SCHOOLS/UPLOAD/SMP_FS_CLEANFILL-SCHOOLS.PDF

CONTAMINATION WAS NOT OBSERVED DURING THE FIELD EXPLORATION. HOWEVER, THERE IS A HISTORY OF CONTAMINATION AT THE SITE DUE TO THE PREVIOUS INDUSTRIAL FACILITY. THE AWARDED CONTRACTOR IS TO MAKE PROVISIONS FOR THE HANDLING OF CONTAMINATED SOIL DURING CONSTRUCTION. A CHAIN OF COMMUNICATION IS TO BE IN PLACE AND PROCEDURES OUTLINED TO REDUCE CONSTRUCTION INTERRUPTIONS. PROCEDURES FOR HANDLING CONTAMINATED SOIL INCLUDE ONSITE PERSONNEL TRAINED IN ACCORDANCE WITH 29 CODE OF FEDERAL REGULATIONS (CFR) PART 1910.120 , CHAIN-OF-CUSTODY PROCEDURES AND FORMS, EQUIPMENT SUITABLE FOR EXCAVATING AND TRANSPORTING CONTAMINATED SOILS, AND A SITE SELECTED FOR THE PROPER DISPOSAL AND TREATMENT OF CONTAMINATED SOILS. THE CALIFORNIA DEPARTMENT OF TOXIC SUBSTANCES CONTROL SHOULD BE NOTIFIED PRIOR TO ANY EARTHWORK PERFORMED AT THE SITE.

SPECIAL NOTES

1. ALL OPERATIONS CONDUCTED ON THE PREMISES, INCLUDING THE WARMING UP, REPAIR, ARRIVAL, DEPARTURE, OR RUNNING OF TRUCKS, EARTHMOVING EQUIPMENT, CONSTRUCTION EQUIPMENT, AND ANY OTHER ASSOCIATED EQUIPMENT SHALL BE LIMITED TO THE PERIOD BETWEEN 6:00 AM AND 7:00 PM EACH DAY, MONDAY THROUGH FRIDAY, AND NO GRADING OR EARTHMOVING OPERATIONS SHALL BE CONDUCTED ON THE PREMISES ON SATURDAYS, SUNDAYS OR CITY OF TORRANCE HOLIDAYS WITHOUT APPROVAL BY THE CITY ENGINEER. OVERTIME INSPECTIONS SHALL BE AT THE CONTRACTOR'S EXPENSE.

2. THE CONTRACTOR SHALL TAKE ALL PRECAUTIONARY MEASURES TO PROTECT EXISTING IMPROVEMENTS AND THE CITY OF TORRANCE WILL ENFORCE SECTION 7-9 OF THE STANDARD SPECIFICATIONS FOR PUBLIC WORKS CONSTRUCTION.

3. THE CONTRACTOR SHALL DESIGN, PLACE AND MAINTAIN ALL SAFETY DEVICES INCLUDING SHORING AND BARRICADING, AND SHALL BE SOLELY RESPONSIBLE FOR CONFORMING TO ALL LOCAL, STATE AND FEDERAL SAFETY AND HEALTH STANDARDS, LAWS AND REGULATIONS. THE CONTRACTOR IS REFERRED TO SECTION 7-10 "PUBLIC CONVENIENCE AND SAFETY" OF THE STANDARD SPECIFICATIONS FOR PUBLIC WORKS CONSTRUCTION.

4. ANY CONTRACTOR PERFORMING WORK ON THE PROJECT SITE SHALL FAMILIARIZE SELF WITH THE SITE AND SHALL BE SOLELY RESPONSIBLE FOR ANY DAMAGE TO EXISTING FACILITIES RESULTING DIRECTLY OR INDIRECTLY FROM OPERATIONS. THE CONTRACTOR IS REFERRED TO SECTION 7-9 "PROTECTION AND RESTORATION OF EXISTING IMPROVEMENTS" OF THE STANDARD SPECIFICATIONS FOR PUBLIC WORKS CONSTRUCTION.

5. ACCESS FOR FIRE AND OTHER EMERGENCY VEHICLES SHALL BE MAINTAINED AT ALL TIMES DURING PROJECT CONSTRUCTION.

6. THE CONTRACTOR SHALL MAINTAIN ADEQUATE DUST CONTROL MEASURES THROUGHOUT THE DURATION OF PROJECT CONSTRUCTION. PROJECT SITE MAINTENANCE SHALL CONFORM TO SECTION 7-8 "PROJECT SITE MAINTENANCE" OF THE STANDARD SPECIFICATIONS FOR PUBLIC WORKS CONSTRUCTION.

7. ALL DISTANCES AND DIMENSIONS SHOWN ON THE PLANS ARE IN A HORIZONTAL PLANE UNLESS OTHERWISE NOTED.

8. APPROVAL OF THESE PLANS AS SHOWN DOES NOT CONSTITUTE APPROVAL OF ANY CONSTRUCTION OUTSIDE THE PROJECT LIMITS OF WORK.

9. LOCATION AND ELEVATION OF IMPROVEMENTS SHALL BE CONFIRMED BY FIELD MEASUREMENTS PRIOR TO CONSTRUCTION. THE CONTRACTOR SHALL MAKE EXPLORATORY EXCAVATIONS AND LOCATE EXISTING UNDERGROUND FACILITIES SUFFICIENTLY AHEAD OF CONSTRUCTION TO PERMIT REVISIONS TO PLANS IF NECESSARY BECAUSE OF DISCREPANCIES.

10. NEITHER THE OWNER, NOR THE ENGINEER OF WORK, WILL ENFORCE SAFETY MEASURES OR REGULATIONS. THE CONTRACTOR SHALL DESIGN, CONSTRUCT, AND MAINTAIN ALL SAFETY DEVICES, INCLUDING SHORING, AND SHALL BE SOLELY RESPONSIBLE FOR CONFORMING TO ALL LOCAL, STATE, AND FEDERAL SAFETY AND HEALTH STANDARDS, LAWS, AND REGULATIONS.

11. THE CONTRACTOR AGREES TO ASSUME SOLE AND COMPLETE RESPONSIBILITY FOR JOB SITE CONDITIONS DURING THE COURSE OF CONSTRUCTION OF THIS PROJECT, INCLUDING SAFETY OF ALL PERSONS AND PROPERTY; THAT THIS REQUIREMENT SHALL APPLY CONTINUOUSLY AND NOT BE LIMITED TO NORMAL WORKING HOURS; AND THAT THE CONTRACTOR SHALL DEFEND, INDEMNIFY, AND HOLD THE OWNER AND THE ENGINEER HARMLESS FROM ANY AND ALL LIABILITY, REAL OR ALLEGED, IN CONNECTION WITH THE PERFORMANCE OF WORK ON THIS PROJECT, EXCEPTING FOR LIABILITY ARISING FROM THE SOLE NEGLIGENCE OF THE OWNER OR THE ENGINEER.

12. THE ENGINEER OF WORK SHALL NOT BE RESPONSIBLE FOR THE CONTRACTOR'S FAILURE TO CARRY OUT THE CONSTRUCTION WORK IN ACCORDANCE WITH THE CONTRACT DOCUMENTS, NOR SHALL HE BE REQUIRED TO SUPERVISE THE CONDUCT OF THE WORK OR THE CONSTRUCTION PROCEDURES FOLLOWED BY THE CONTRACTOR OR SUBCONTRACTORS OR THEIR RESPECTIVE EMPLOYEES OR BY ANY OTHER PERSON AT THE JOB SITE OTHER THAN THAT OF THE ENGINEER'S EMPLOYEES.

GRADING PERMIT REQUIREMENTS

CONTRACTOR IS RESPONSIBLE FOR PULLING THE GRADING PERMIT, INCLUDING PAYMENT OF ALL PERMIT FEES, FROM THE CITY FOR THIS PROJECT PRIOR TO THE START OF CONSTRUCTION.

WORK TO BE DONE

THE IMPROVEMENTS CONSIST OF THE FOLLOWING WORK TO BE DONE ACCORDING TO THESE PLANS AND THE SPECIFICATIONS AND STANDARD DRAWINGS LISTED BELOW.

STANDARD SPECIFICATIONS

1) STANDARD SPECIFICATIONS FOR PUBLIC WORKS CONSTRUCTION (LATEST EDITION)

2) CALIFORNIA DEPARTMENT OF TRANSPORTATION, "MANUAL OF TRAFFIC CONTROLS FOR CONSTRUCTION AND MAINTENANCE WORK ZONES" (MAY 19, 2004)

STANDARD DRAWINGS

CITY OF TORRANCE STANDARD DRAWINGS, (LATEST EDITION)

STANDARD PLANS FOR PUBLIC WORKS CONSTRUCTION (SPPWC)

NEW IMPROVEMENTS

DESCRIPTION	STD DWG NO./DETAIL NO.	SYMBOL
FUTURE 6" CURB (SEE C-7 & C-8)	SPPWC 120	
FUTURE 6" CURB & GUTTER (SEE C-7 & C-8)	SPPWC 120	
STORM DRAIN CLEANOUT	1/C4	SDCO
STORM DRAIN (SIZE/TYPE AS SHOWN)	1/C4	
TEMPORARY CATCH BASIN (TO BE REMOVED DURING FINAL GRADING)	3/C4	
CONCRETE CATCH BASIN	1/C4	
TEMPORARY CATCH BASIN AT FUTURE CATCH BASIN LOCATION	3/C4	
RISER PIPE FOR FUTURE CATCH BASIN	3/C4	RP
CURBSIDE GRATED CATCH BASIN	SPPWC 303-3	
MANHOLE	SPPWC 321-2	
TOP OF SLOPE		
TOE OF SLOPE		
STORM WATER BMP	PER SD-504	
WEIR MANHOLE	PER SD-504	
UNDERGROUND DETENTION BASIN	PER SD-504	

EXISTING CONDITIONS

ITEM	SYMBOL
EXISTING SEWER LINE	
EXISTING SEWER CLEANOUT	
EXISTING SEWER MANHOLE	SMH OR SMH
EXISTING WATER LINE	
EXISTING WATER METER	WM
EXISTING WATER VALVE	
EXISTING FIRE HYDRANT	
EXISTING STORM DRAIN LINE	
EXISTING STORM DRAIN INLET	DI
EXISTING POWER POLE	
EXISTING ELECTRIC OR UNDERGROUND	
EXISTING STREET LIGHT	
EXISTING GAS LINE	
EXISTING TELEPHONE LINE	
EXISTING TELEPHONE PEDESTAL	
EXISTING CABLE TV LINE	CATV
EXISTING PULL BOX	
EXISTING SIGN	
EXISTING TREE/BUSH	
EXISTING BOLLARD	
EXISTING FENCE	

No.	Distribution/Revision	Date

PSOMAS
3111 Camino Del Rio North, Suite 702
San Diego, CA 92108
(619) 961-2600 (619) 961-2592 fax
www.psomas.com

City of Torrance
Torrance Transit Park & Ride
Regional Terminal
465 Crenshaw Blvd.
Torrance, CA 90503

Torrance Transit Park and Ride Regional Terminal

CLIENT PROJECT #:B2013-15

Drawing Title

NOTES AND LEGENDS

Scale: NONE

IF DRAWING IS NOT 30X42 THEN IT IS NOT TO SCALE

Designer: LA
Project Manager: JSB
Project No.: 13025
Date Plotted: -

Drawing No.

C-2

Plotted – 6/29/2015 11:04:08 AM :: Saved – 6/17/2015 3:21:40 PM :: S:\SFWA010100 Torrance_Transit_Center\TRANSPI\SHEETS\Advanced GPVC-2 GN.dwg C-2 :: gyen

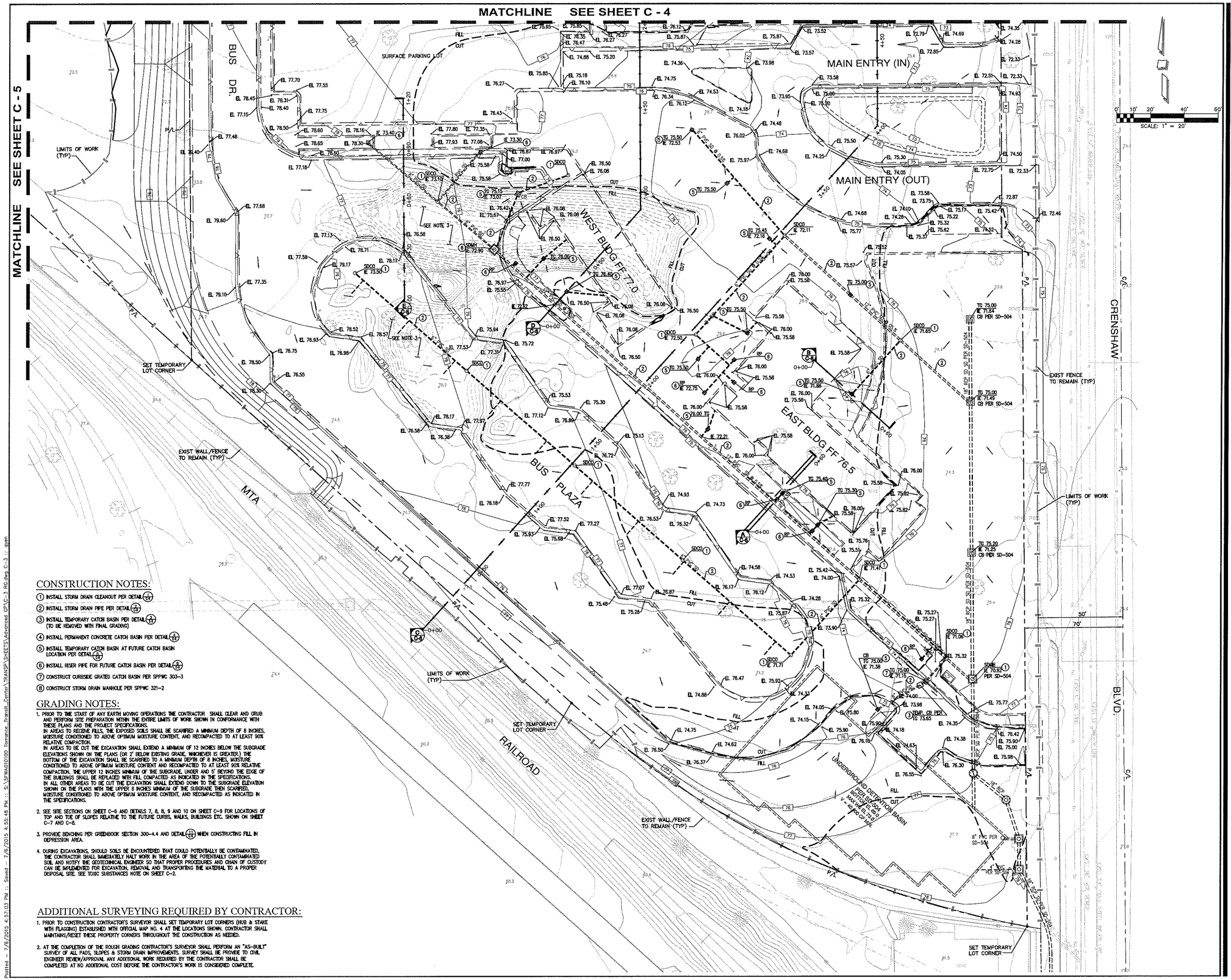

CONSTRUCTION NOTES:

1. INSTALL STORM DRAIN CLEANOUT PER DETAIL
2. INSTALL STORM DRAIN PIPE PER DETAIL
3. INSTALL TEMPORARY CATCH BASIN PER DETAIL (TO BE REMOVED WITH FINAL GRADING)
4. INSTALL PERMANENT CONCRETE CATCH BASIN PER DETAIL
5. INSTALL TEMPORARY CATCH BASIN AT FUTURE CATCH BASIN LOCATION PER DETAIL
6. INSTALL RISER PIPE FOR FUTURE CATCH BASIN PER DETAIL
7. CONSTRUCT CURBSIDE GRATED CATCH BASIN PER SPPWC 303-3
8. CONSTRUCT STORM DRAIN MANHOLE PER SPPWC 321-2

GRADING NOTES:

1. PRIOR TO THE START OF ANY EARTH MOVING OPERATIONS THE CONTRACTOR SHALL CLEAR AND GRUB AND PERFORM SITE PREPARATION WITHIN THE ENTIRE LIMITS OF WORK SHOWN IN CONFORMANCE WITH THESE PLANS AND THE PROJECT SPECIFICATIONS.
   IN AREAS TO RECEIVE FILLS, THE EXPOSED SOILS SHALL BE SCARIFIED A MINIMUM DEPTH OF 8 INCHES, MOISTURE CONDITIONED TO ABOVE OPTIMUM MOISTURE CONTENT, AND RECOMPACTED TO AT LEAST 90% RELATIVE COMPACTION.
   IN AREAS TO BE CUT THE EXCAVATION SHALL EXTEND A MINIMUM OF 12 INCHES BELOW THE SUBGRADE ELEVATIONS SHOWN ON THE PLANS (OR 2' BELOW EXISTING GRADE, WHICHEVER IS GREATER.) THE BOTTOM OF THE EXCAVATION SHALL BE SCARIFIED TO A MINIMUM DEPTH OF 8 INCHES, MOISTURE CONDITIONED TO ABOVE OPTIMUM MOISTURE CONTENT AND RECOMPACTED TO AT LEAST 90% RELATIVE COMPACTION. THE UPPER 12 INCHES MINIMUM OF THE SUBGRADE, UNDER AND 5' BEYOND THE EDGE OF THE BUILDINGS SHALL BE REPLACED WITH FILL COMPACTED AS INDICATED IN THE SPECIFICATIONS.
   IN ALL OTHER AREAS TO BE CUT THE EXCAVATION SHALL EXTEND DOWN TO THE SUBGRADE ELEVATION SHOWN ON THE PLANS WITH THE UPPER 8 INCHES MINIMUM OF THE SUBGRADE THEN SCARIFIED, MOISTURE CONDITIONED TO ABOVE OPTIMUM MOISTURE CONTENT, AND RECOMPACTED AS INDICATED IN THE SPECIFICATIONS.
2. SEE SITE SECTIONS ON SHEET C-6 AND DETAILS 7, 8, 8, 9 AND 10 ON SHEET C-9 FOR LOCATIONS OF TOP AND TOE OF SLOPES RELATIVE TO THE FUTURE CURBS, WALKS, BUILDINGS ETC. SHOWN ON SHEET C-7 AND C-8.
3. PROVIDE BENCHING PER GEENBOOK SECTION 300-4.4 AND DETAIL WHEN CONSTRUCTING FILL IN DEPRESSION AREA.
4. DURING EXCAVATIONS, SHOULD SOILS BE ENCOUNTERED THAT COULD POTENTIALLY BE CONTAMINATED, THE CONTRACTOR SHALL IMMEDIATELY HALT WORK IN THE AREA OF THE POTENTIALLY CONTAMINATED SOIL AND NOTIFY THE GEOTECHNICAL ENGINEER SO THAT PROPER PROCEDURES AND CHAIN OF CUSTODY CAN BE IMPLEMENTED FOR EXCAVATION, REMOVAL AND TRANSPORTING THE MATERIAL TO A PROPER DISPOSAL SITE. SEE TOXIC SUBSTANCES NOTE ON SHEET C-2.

ADDITIONAL SURVEYING REQUIRED BY CONTRACTOR:

1. PRIOR TO CONSTRUCTION CONTRACTOR'S SURVEYOR SHALL SET TEMPORARY LOT CORNERS (HUB & STAKE WITH FLAGGING) ESTABLISHED WITH OFFICIAL MAP NO. 4 AT THE LOCATIONS SHOWN. CONTRACTOR SHALL MAINTAINS/RESET THESE PROPERTY CORNERS THROUGHOUT THE CONSTRUCTION AS NEEDED.
2. AT THE COMPLETION OF THE ROUGH GRADING CONTRACTOR'S SURVEYOR SHALL PERFORM AN "AS-BUILT" SURVEY OF ALL PADS, SLOPES & STORM DRAIN IMPROVEMENTS. SURVEY SHALL BE PROVIDE TO CIVIL ENGINEER REVIEW/APPROVAL ANY ADDITIONAL WORK REQUIRED BY THE CONTRACTOR SHALL BE COMPLETED AT NO ADDITIONAL COST BEFORE THE CONTRACTOR'S WORK IS CONSIDERED COMPLETE.

No.	Distribution/Revision	Date

PSOMAS
3111 Camino Del Rio North, Suite 702
San Diego, CA 92108
(619) 961-2800 (619) 961-2392 fax
www.psomas.com

City of Torrance
Torrance Transit Park & Ride
Regional Terminal
465 Crenshaw Blvd.
Torrance, CA 90503

Torrance Transit Park and Ride Regional Terminal

CLIENT PROJECT #:B2013-15

Drawing Title

ADVANCED / ROUGH GRADING PLAN

Scale: 1" = 20'

IF DRAWING IS NOT 30X42 THEN IT IS NOT TO SCALE

Drawn: LA

Project Manager: JSB

Project No.: 13025

Date Plotted: -

Drawing No. C-3

Plotted: 7/6/2015 4:57:03 PM :: Saved: 7/6/2015 4:55:48 PM :: S:\EFWA01010\0 Torrance Transit Center\TRANSP\SHEETS\Advanced GP\C-3 RG.dwg C-3 :: dyan

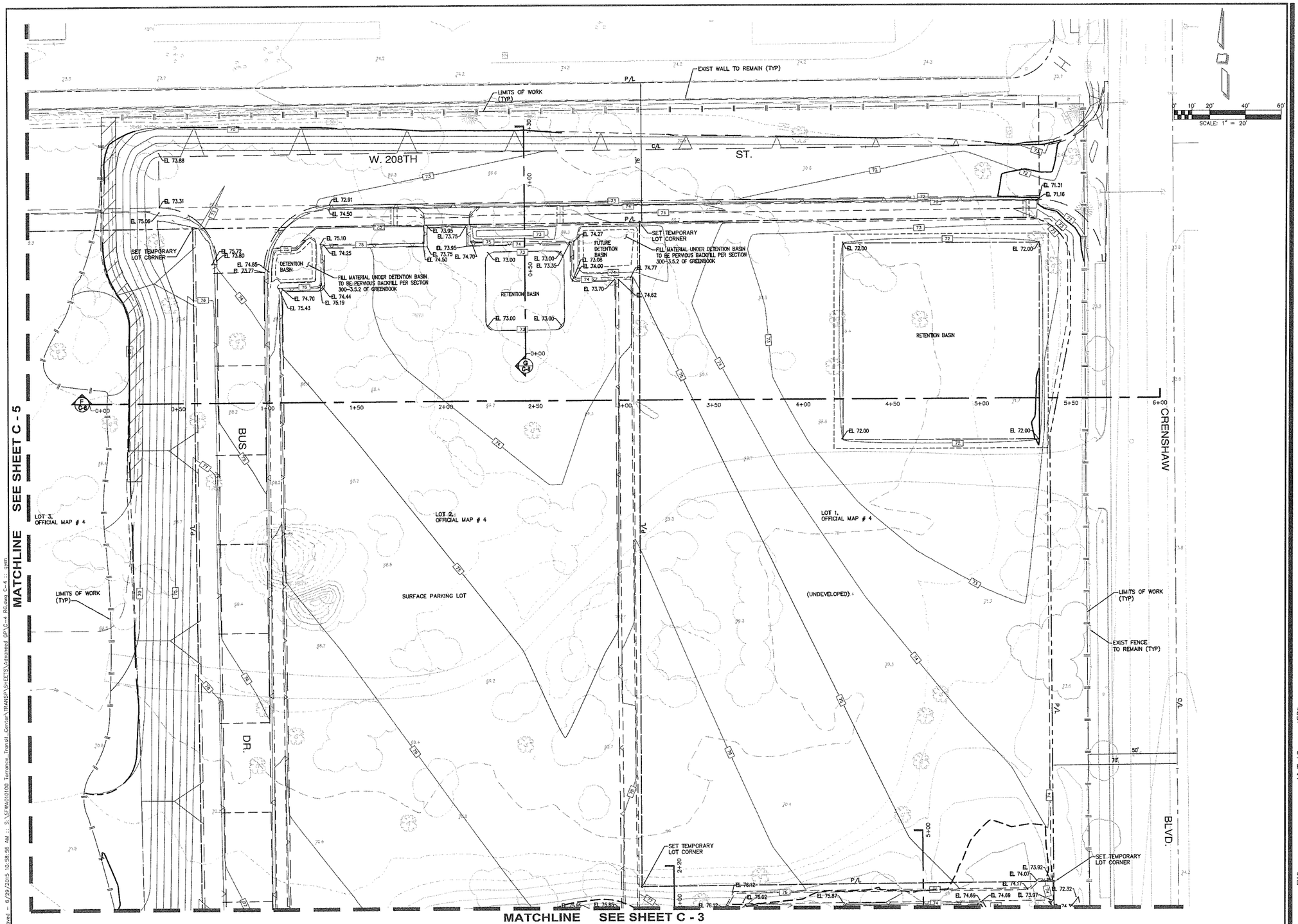

No.	Distribution/Revision	Date

PSOMAS

3111 Camino Del Rio North, Suite 702
San Diego, CA 92108
(619) 961-2800 (619) 961-2392 fax
www.psomas.com

City of Torrance
Torrance Transit Park & Ride
Regional Terminal
465 Crenshaw Blvd.
Torrance, CA 90503

Torrance Transit Park and Ride Regional Terminal

CLIENT PROJECT #:B2013-15

Drawing Title

ADVANCED / ROUGH GRADING PLAN

Scale: 1" = 20'

IF DRAWING IS NOT 30X42 THEN IT IS NOT TO SCALE

Location: LA

Project Manager: JSB

Project No.: 13025

Date Plotted:

Drawing No.

C-4

Plotted – 6/29/2015 11:04:16 AM :: Saved – 6/29/2015 10:58:56 AM :: S:\SFWA010100 Torrance Transit Center\TRANSP\SHEETS\Advanced GP\C-4 RG.dwg C-4 :: gyen

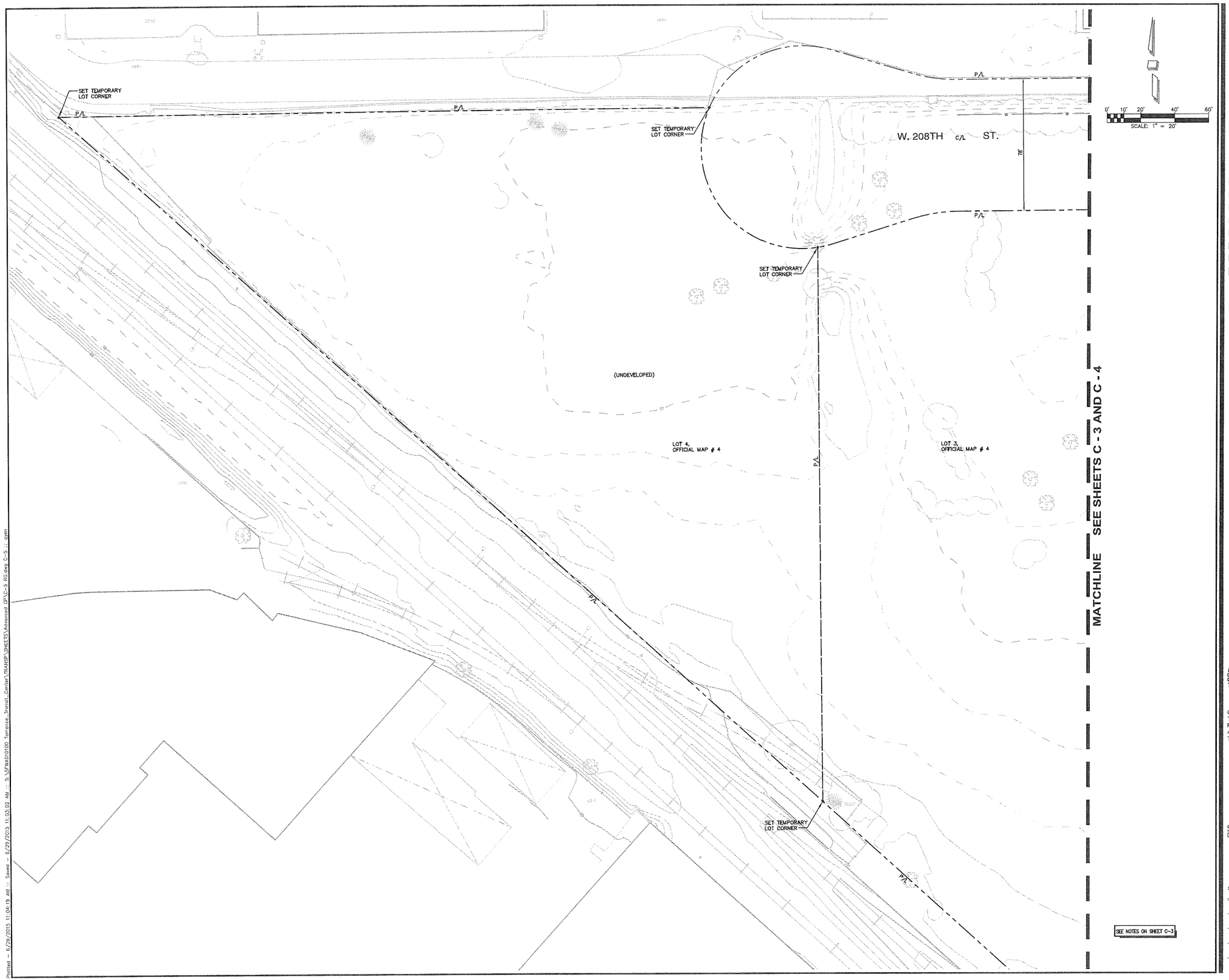

No.	Distribution/Revision	Date

PSOMAS

3111 Camino Del Rio North, Suite 702
San Diego, CA 92108
(619) 881-2800 (619) 881-2392 fax
www.psomas.com

City of Torrance
Torrance Transit Park & Ride
Regional Terminal
465 Crenshaw Blvd.
Torrance, CA 90503

Torrance Transit Park and Ride Regional Terminal

CLIENT PROJECT #:B2013-15

Drawing Title

ADVANCED / ROUGH GRADING PLAN

Scale: 1" = 20'

IF DRAWING IS NOT 30X42 THEN IT IS NOT TO SCALE

Location: LA

Project Manager: JSB

Project No: 13026

Date Plotted:

Drawing No.

C-5

Plotted: 6/29/2015 11:04:19 AM :: Saved: 6/29/2015 11:03:02 AM :: S:\SFWA010100_Torrance_Transit_Center\TRANSP\SHEETS\Advanced GP\C-5 RG.dwg C-5 :: dyem

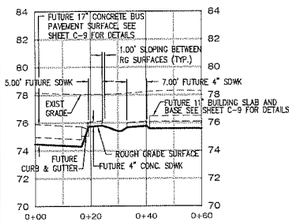

SITE SECTION (A)
SCALE: 1"=20' H, 1"=4' V

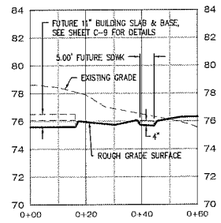

SITE SECTION (B)
SCALE: 1"=20' H, 1"=4' V

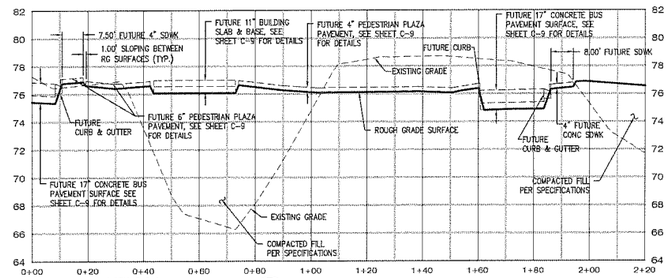

SITE SECTION (D)
SCALE: 1"=20' H, 1"=4' V

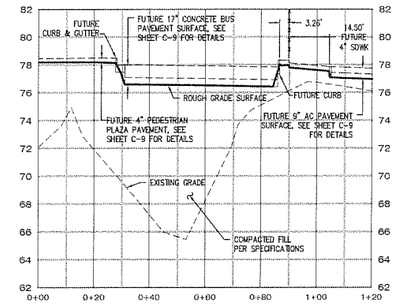

SITE SECTION (E)
SCALE: 1"=20' H, 1"=4' V

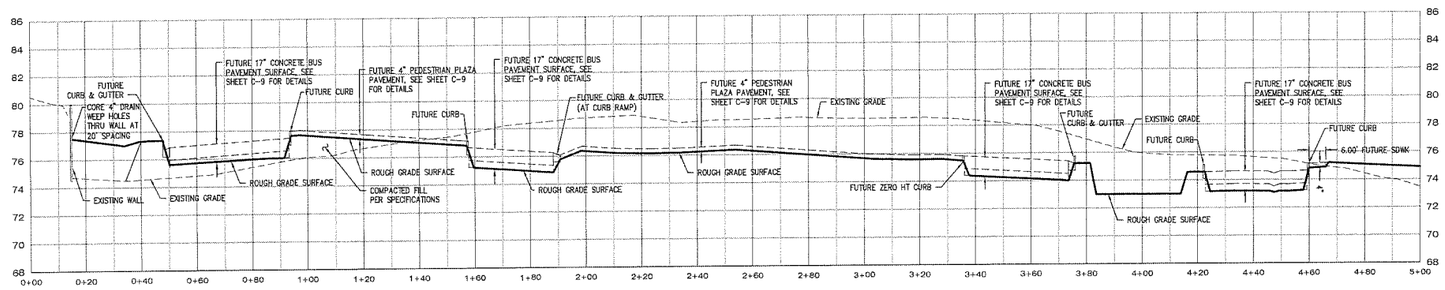

SITE SECTION (C)
SCALE: 1"=20' H, 1"=4' V

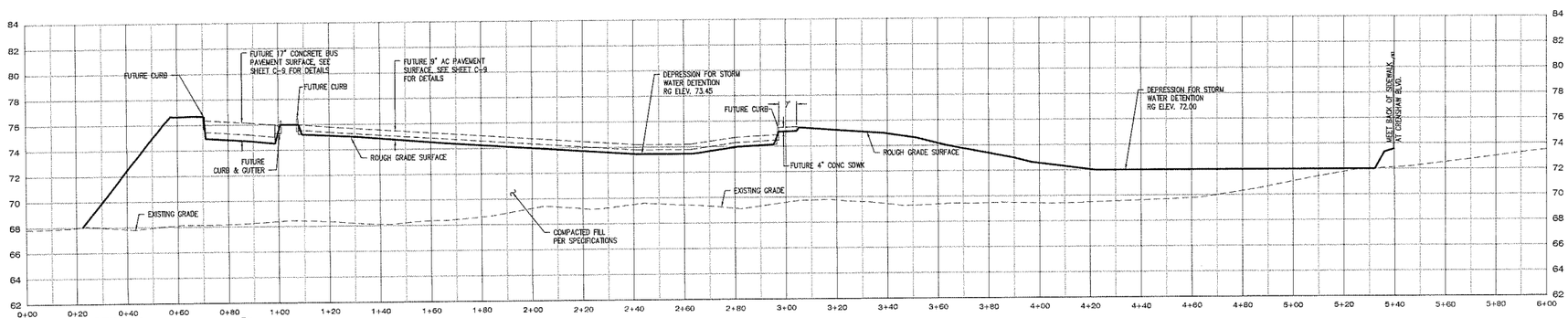

SITE SECTION (F)
SCALE: 1"=20' H, 1"=4' V

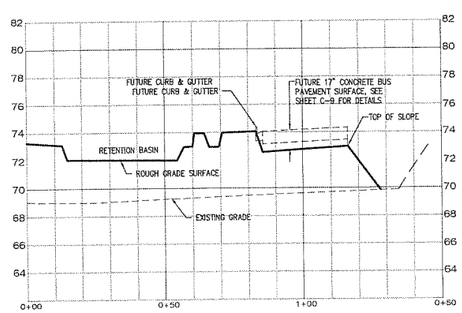

SITE SECTION (G)
SCALE: 1"=20' H, 1"=4' V

No.	Distribution/Revision	Date

PSOMAS
3111 Camino Del Rio North, Suite 702
San Diego, CA 92108
(619) 961-2800 (619) 961-2392 fax
www.psomas.com

City of Torrance
Torrance Transit Park & Ride
Regional Terminal
485 Crenshaw Blvd.
Torrance, CA 90503

Torrance Transit Park and Ride Regional Terminal

CLIENT PROJECT #:B2013-15

Drawing Title

SITE SECTIONS

Scale: NONE

IF DRAWING IS NOT 30X42 THEN IT IS NOT TO SCALE

Drawn: LA

Project Manager: JSB

Project No: 13025

Date Plotted: -

Drawing No.

C-6

Plotted - 6/29/2015 11:04:32 AM :: Saved - 6/17/2015 3:02:22 PM :: S:\SPW&010100 Torrance_Transit_Center\TRANSP\SHEETS\Advanced GP\C-6 XS.dwg C-6 :: gyen

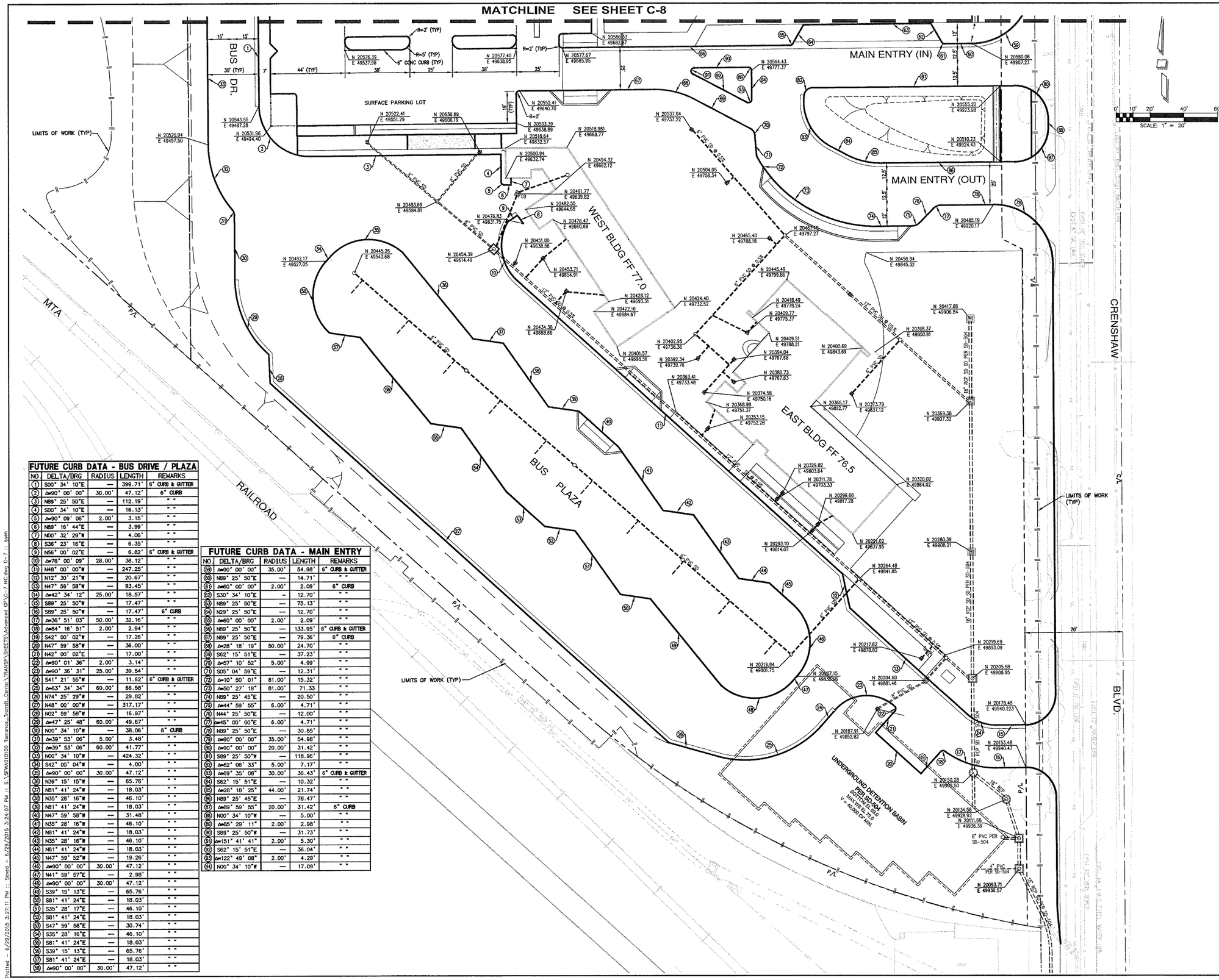

FUTURE CURB DATA - BUS DRIVE / PLAZA

NO.	DELTA/BRG	RADIUS	LENGTH	REMARKS
(1)	S00° 34' 10"E	—	399.71'	6" CURB & GUTTER
(2)	Δ=90° 00' 00"	30.00'	47.12'	6" CURB
(3)	N89° 25' 50"E	—	112.19'	" "
(4)	S00° 34' 10"E	—	16.13'	" "
(5)	Δ=90° 09' 06"	2.00'	3.15'	" "
(6)	N89° 16' 44"E	—	3.99'	" "
(7)	N00° 32' 29"W	—	4.06'	" "
(8)	S36° 23' 16"E	—	6.35'	" "
(9)	N56° 00' 02"E	—	6.82'	6" CURB & GUTTER
(10)	Δ=78° 00' 09"	28.00'	38.12'	" "
(11)	N48° 00' 00"W	—	247.25'	" "
(12)	N12° 30' 21"W	—	20.67'	" "
(13)	N47° 59' 58"W	—	93.45'	" "
(14)	Δ=42° 34' 12"	25.00'	18.57'	" "
(15)	S89° 25' 50"W	—	17.47'	" "
(16)	S89° 25' 50"W	—	17.47'	6" CURB
(17)	Δ=36° 51' 03"	50.00'	32.16'	" "
(18)	Δ=84° 16' 51"	2.00'	2.94'	" "
(19)	S42° 00' 02"W	—	17.26'	" "
(20)	N47° 59' 58"W	—	36.00'	" "
(21)	N42° 00' 02"E	—	17.00'	" "
(22)	Δ=90° 01' 36"	2.00'	3.14'	" "
(23)	Δ=90° 36' 31"	25.00'	39.54'	" "
(24)	S41° 21' 55"W	—	11.62'	6" CURB & GUTTER
(25)	Δ=63° 34' 34"	60.00'	66.58'	" "
(26)	N74° 25' 29"W	—	29.82'	" "
(27)	N48° 00' 00"W	—	317.17'	" "
(28)	N02° 59' 58"W	—	16.97'	" "
(29)	Δ=47° 25' 48"	60.00'	49.67'	" "
(30)	N00° 34' 10"W	—	38.06'	6" CURB
(31)	Δ=39° 53' 06"	5.00'	3.48'	" "
(32)	Δ=39° 53' 06"	60.00'	41.77'	" "
(33)	N00° 34' 10"W	—	424.32'	" "
(34)	S42° 00' 04"W	—	4.00'	" "
(35)	Δ=90° 00' 00"	30.00'	47.12'	" "
(36)	N39° 15' 15"W	—	65.76'	" "
(37)	N81° 41' 24"W	—	18.03'	" "
(38)	N35° 28' 16"W	—	46.10'	" "
(39)	N81° 41' 24"W	—	18.03'	" "
(40)	N47° 59' 58"W	—	31.48'	" "
(41)	N35° 28' 16"W	—	46.10'	" "
(42)	N81° 41' 24"W	—	18.03'	" "
(43)	N35° 28' 16"W	—	46.10'	" "
(44)	N81° 41' 24"W	—	18.03'	" "
(45)	N47° 59' 52"W	—	19.26'	" "
(46)	Δ=90° 00' 00"	30.00'	47.12'	" "
(47)	N41° 59' 57"E	—	2.98'	" "
(48)	Δ=90° 00' 00"	30.00'	47.12'	" "
(49)	S39° 15' 13"E	—	65.76'	" "
(50)	S81° 41' 24"E	—	18.03'	" "
(51)	S35° 28' 17"E	—	46.10'	" "
(52)	S81° 41' 24"E	—	18.03'	" "
(53)	S47° 59' 58"E	—	30.74'	" "
(54)	S35° 28' 16"E	—	46.10'	" "
(55)	S81° 41' 24"E	—	18.03'	" "
(56)	S39° 15' 13"E	—	65.76'	" "
(57)	S81° 41' 24"E	—	18.03'	" "
(58)	Δ=90° 00' 00"	30.00'	47.12'	" "

FUTURE CURB DATA - MAIN ENTRY

NO.	DELTA/BRG	RADIUS	LENGTH	REMARKS
(59)	Δ=90° 00' 00"	35.00'	54.98'	6" CURB & GUTTER
(60)	N89° 25' 50"E	—	14.71'	" "
(61)	Δ=60° 00' 00"	2.00'	2.09'	6" CURB
(62)	S30° 34' 10"E	—	12.70'	" "
(63)	N89° 25' 50"E	—	75.13'	" "
(64)	N29° 25' 50"E	—	12.70'	" "
(65)	Δ=60° 00' 00"	2.00'	2.09'	" "
(66)	N89° 25' 50"E	—	133.95'	6" CURB & GUTTER
(67)	N89° 25' 50"E	—	79.36'	6" CURB
(68)	Δ=28° 18' 19"	50.00'	24.70'	" "
(69)	S62° 15' 51"E	—	37.23'	" "
(70)	Δ=57° 10' 52"	5.00'	4.99'	" "
(71)	S05° 04' 59"E	—	12.31'	" "
(72)	Δ=10° 50' 01"	81.00'	15.32'	" "
(73)	Δ=50° 27' 19"	81.00'	71.33	" "
(74)	N89° 25' 45"E	—	20.50'	" "
(75)	Δ=44° 59' 55"	6.00'	4.71'	" "
(76)	N44° 25' 50"E	—	12.00'	" "
(77)	Δ=45° 00' 00"E	6.00'	4.71'	" "
(78)	N89° 25' 50"E	—	30.85'	" "
(79)	Δ=90° 00' 00"	35.00'	54.98'	" "
(80)	Δ=90° 00' 00"	20.00'	31.42'	" "
(81)	S89° 25' 50"W	—	118.96'	" "
(82)	Δ=82° 06' 33"	5.00'	7.17'	" "
(83)	Δ=69° 35' 08"	30.00'	36.43'	6" CURB & GUTTER
(84)	S62° 15' 51"E	—	10.32'	" "
(85)	Δ=28° 18' 25"	44.00'	21.74'	" "
(86)	N89° 25' 45"E	—	78.47'	" "
(87)	Δ=89° 59' 55"	20.00'	31.42'	6" CURB
(88)	N00° 34' 10"W	—	5.00'	" "
(89)	Δ=85° 29' 11"	2.00'	2.98'	" "
(90)	S89° 25' 50"W	—	31.73'	" "
(91)	Δ=151° 41' 41"	2.00'	5.30'	" "
(92)	S62° 15' 51"E	—	36.04'	" "
(93)	Δ=122° 49' 08"	2.00'	4.29'	" "
(94)	N00° 34' 10"W	—	17.09'	" "

No.	Distribution/Revision	Date

PSOMAS
3111 Camino Del Rio North, Suite 702
San Diego, CA 92108
(619) 961-2800 (619) 961-2392 fax
www.psomas.com

City of Torrance
Torrance Transit Park & Ride
Regional Terminal
465 Crenshaw Blvd.
Torrance, CA 90503

Torrance Transit Park and Ride Regional Terminal

CLIENT PROJECT #:B2013-15

Drawing Title

HORIZONTAL CONTROL PLAN

Scale: 1" = 20'

IF DRAWING IS NOT 30X42 THEN IT IS NOT TO SCALE

Drawing No.

C-7

Drawn	LA
Project Manager	JSB
Project No.	13025
Date Plotted	-

Plotted: 6/29/2015 3:27:11 PM :: Saved: 6/29/2015 3:24:07 PM :: S:\SPM\013100 Torrance_Transit Center\TRANSP\SHEETS\Advanced CP\C-7 HC.dwg C-7 :: gyem

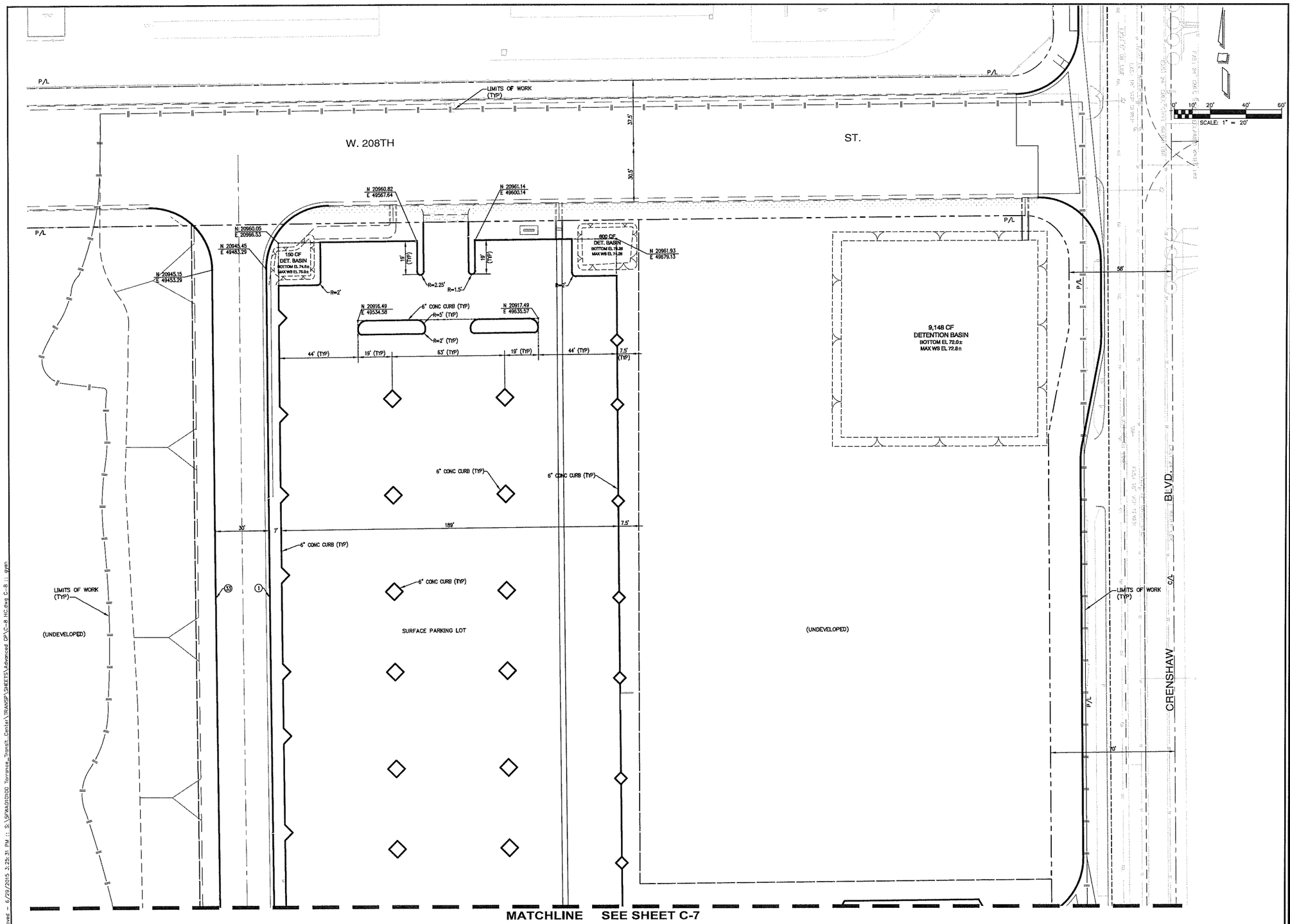

FUTURE CURB DATA - BUS DRIVE / PLAZA				
NO.	DELTA/BRG	RADIUS	LENGTH	REMARKS
1	S00° 34' 10"E	—	399.71'	6" CURB & GUTTER
33	N00° 34' 10"W	—	424.32'	6" CURB

No.	Distribution/Revision	Date

PSOMAS
3111 Camino Del Rio North, Suite 702
San Diego, CA 92108
(619) 961-2800 (619) 961-2392 fax
www.psomas.com

City of Torrance
Torrance Transit Park & Ride
Regional Terminal
465 Crenshaw Blvd.
Torrance, CA 90503

Torrance Transit Park and Ride Regional Terminal

CLIENT PROJECT #:B2013-15

Drawing Title

HORIZONTAL CONTROL PLAN

Scale: 1" = 20'

IF DRAWING IS NOT 30X42 THEN IT IS NOT TO SCALE

Drawing No.

C-8

Drawn: LA
Project Manager: JSB
Project No.: 13025
Date Plotted: -

Plotted = 6/29/2015 3:27:13 PM :: Saved = 6/29/2015 3:29:31 PM :: S:\SPWA01\0100_Torrance_Transit_Center\TRANSP\SHEETS\Advanced GP\C-8 HC.dwg C-8 :: gwm

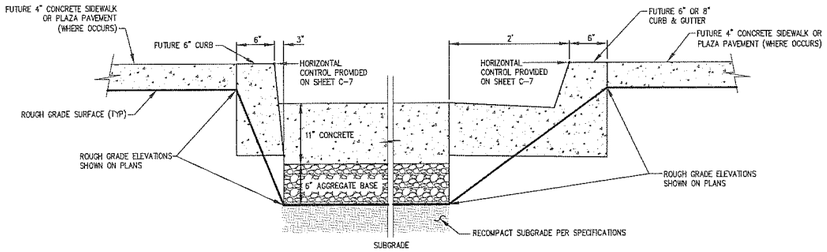

FUTURE CONCRETE VEHICULAR PAVEMENT (7 -)
N.T.S.

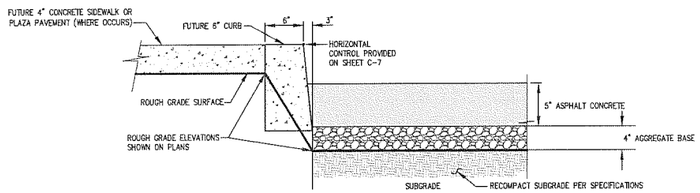

FUTURE ASPHALT CONCRETE PAVEMENT (8 -)
N.T.S.

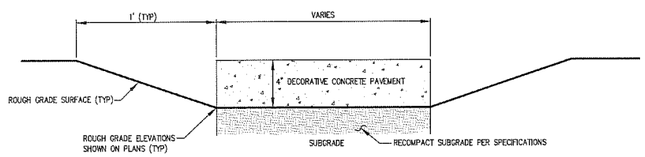

FUTURE CONCRETE PEDESTRIAN PLAZA PAVEMENT (9 -)
N.T.S.

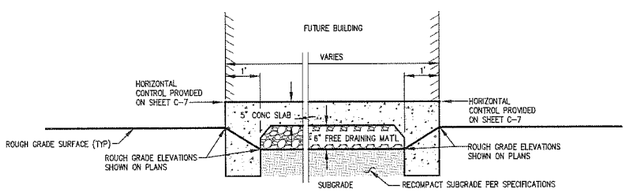

FUTURE BUILDING SLAB (10 -)
N.T.S.

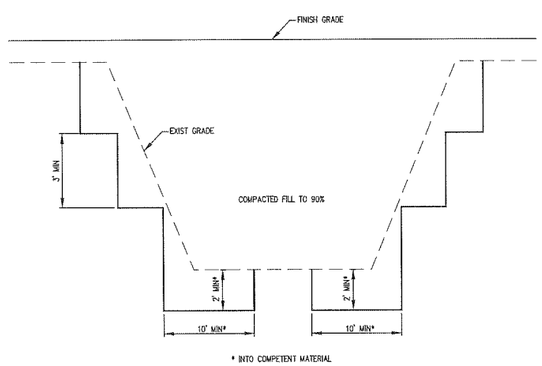

FILL PLACEMENT ON GROUND > 4(H): 1(V) (11 -)
N.T.S.

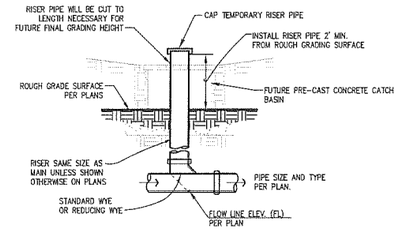

RISER PIPE FOR FUTURE CATCH BASIN (6 -)
N.T.S.

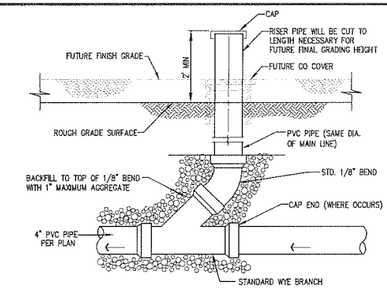

STORM DRAIN CLEANOUT DETAIL (1 -)
N.T.S.

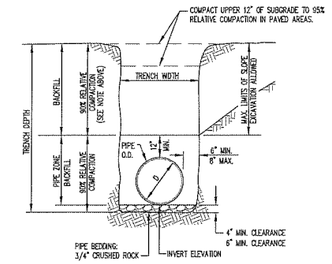

NOTE: PROVIDE 3' MIN COVER UNLESS OTHERWISE SHOWN ON PLANS.

PIPE BEDDING & TRENCH BACKFILL FOR STORM DRAINS < 18" (2 -)
N.T.S.

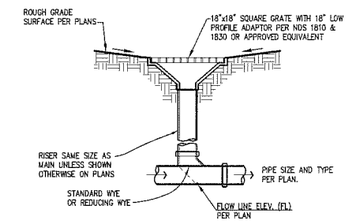

TEMPORARY CATCH BASIN (3 -)
N.T.S.

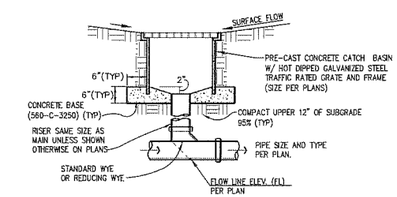

CONCRETE CATCH BASIN (4 -)
N.T.S.

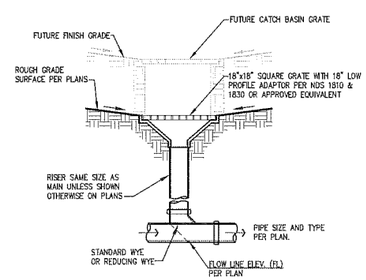

TEMPORARY CATCH BASIN AT FUTURE CATCH BASIN LOCATION (5 -)
N.T.S.

No.	Distribution/Revision	Date

PSOMAS
3111 Camino Del Rio North, Suite 702
San Diego, CA 92108
(619) 961-2800 (619) 961-2392 fax
www.psomas.com

City of Torrance
Torrance Transit Park & Ride
Regional Terminal
465 Crenshaw Blvd.
Torrance, CA 90503

Torrance Transit Park and Ride Regional Terminal

CLIENT PROJECT #:B2013-15

Drawing Title

DETAILS

Scale: NONE
IF DRAWING IS NOT 30X42 THEN IT IS NOT TO SCALE

Drawing No.

C-9

Project Manager: LA
Project No.: JSB
Date Plotted: 13025

Plotted - 6/29/2015 11:05:34 AM :: Saved - 5/4/2015 3:46:22 PM :: S:\SFWA010100 Torrance_Transit_Center\TRANSIT\SHEETS\Advanced CP\C-9 D1.dwg C-9 :: aysen

CITY OF TORRANCE
LOS ANGELES COUNTY, CALIFORNIA

ON-SITE CONSTRUCTION DRAWINGS FOR THE

TORRANCE TRANSIT PARK & RIDE REGIONAL TERMINAL

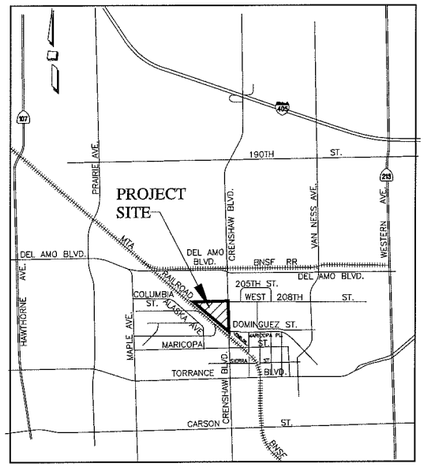

VICINITY MAP
N.T.S.

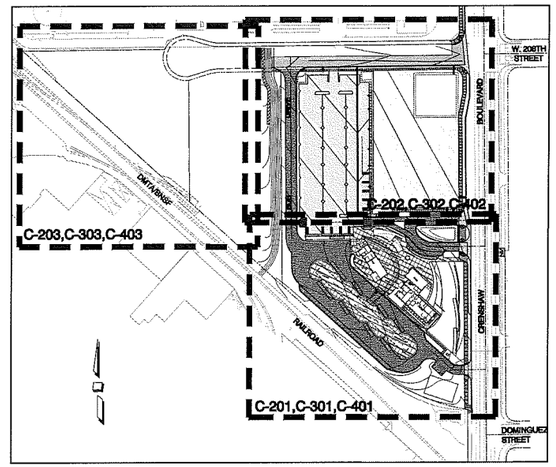

KEY MAP
SCALE: 1=150'

SURVEY MONUMENTS

CONTRACTOR SHALL BE RESPONSIBLE FOR ANY MONUMENTATION AND/OR BENCHMARKS THAT ARE DISTURBED OR DESTROYED BY CONSTRUCTION. SUCH POINTS SHALL BE REFERENCED AND REPLACED WITH APPROPRIATE MONUMENTATION BY A LICENSED LAND SURVEYOR OR REGISTERED ENGINEER AUTHORIZED TO PRACTICE LAND SURVEYING. A CORNER RECORD OF SURVEY AS APPROPRIATE, SHALL BE FILED BY THE LICENSED LAND SURVEYOR OR REGISTERED CIVIL ENGINEER AS REQUIRED BY THE LAND SURVEYOR'S ACT FOR ANY REPLACED MONUMENTATION.

BASIS OF BEARINGS

THE BEARING N00°23'03"W OF THE CENTERLINE OF CRENSHAW BOULEVARD, SHOWN AS N00°34'10"W ON RECORD OF SURVEY FILED IN BOOK 230, PAGE 47 OF RECORDS OF SURVEYS, RECORDS OF LOS ANGELES COUNTY, WAS TAKEN AS THE BASIS OF BEARINGS SHOWN ON THESE PLANS.

LEGAL DESCRIPTION

THAT PORTION OF LOT 8 OF TRACT NO. 7873, IN THE CITY OF TORRANCE, COUNTY OF LOS ANGELES, STATE OF CALIFORNIA, AS PER MAP RECORDED IN BOOK 109, PAGES 99 AND 100 OF MAPS, IN THE OFFICE OF THE COUNTY RECORDER OF SAID COUNTY, AND A PORTION OF PARCEL 130 OF SUBDIVISION OF PORTIONS OF THE 730.61 ACRE TRACT ALLOTTED TO SUSANA DOMINGUEZ BY A FINAL DECREE OF PARTITION OF A PORTION OF THE RANCHO SAN PEDRO IN CASE NO. 3284 OF THE SUPERIOR COURT OF LOS ANGELES COUNTY, DESCRIBED AS A WHOLE AS FOLLOWS:

BEGINNING AT THE MOST SOUTHERLY CORNER OF SAID LOT 8; THENCE NORTH 00 DEGREES 34 MINUTES 10 SECONDS WEST ON AND ALONG THE EAST LINE OF SAID LOT 8, 981.22 FEET; THENCE SOUTH 89 DEGREES 25 MINUTES 50 SECONDS WEST 1204.43 FEET, MORE OR LESS, TO A LINE THAT IS PARALLEL WITH AND DISTANT 5 FEET NORTHEASTERLY AT RIGHT ANGLES FROM THE NORTHEASTERLY BOUNDARY LINE OF THE RIGHT OF WAY OF THE ATCHISON, TOPEKA AND SANTA FE RAILWAY COMPANY, AS CONVEYED TO SANTA FE AND LOS ANGELES HARBOR RAILWAY COMPANY, BY DEED OF EASEMENT RECORDED OCTOBER 9, 1942 AS INSTRUMENT NO. 1327 IN BOOK 19635, PAGE 64, OFFICIAL RECORDS; THENCE SOUTH 48 DEGREES 00 MINUTES 00 SECONDS EAST 1247.12 FEET, MORE OR LESS, ALONG SAID PARALLEL LINE AND THE SOUTHEASTERLY PROLONGATION THEREOF TO THE BEGINNING OF A TANGENT CURVE CONCAVE NORTHEASTERLY HAVING A RADIUS OF 546.438 FEET AND WHIGH PASSES THROUGH THE POINT OF BEGINNING; THENCE SOUTHEASTERLY ALONG SAID CURVE A DISTANCE OF 321.98 FEET TO THE POINT OF BEGINNING.

APN

7352-002-008

BENCHMARK

BENCH MARK: Y10874

DPW BM TAG IN E CB 1M(3.3FT)
N/O BCR @ NE COR CRENSHAW
BLVD & 208TH ST
TORRANCE QUAD 2005 EL. 72.904

SOURCE OF TOPOGRAPHY

PHOTOGRAMMETRIC TOPOGRAPHY PROVIDED BY: PSOMAS
DATED:09/10/2013

EROSION CONTROL

THE CONTRACTOR IS RESPONSIBLE TO REPAIR ANY EROSION DAMAGE TO THE SLOPES, PADS OR STREETS SHOWN ON THESE PLANS WHETHER THE SLOPES ARE EXISTING OR NEW SLOPES, UNTIL THE PROJECT IS ACCEPTED BY THE CITY ENGINEER.

LIST OF DRAWINGS

SHEET No.	DESCRIPTION
C-101	TITLE SHEET
C-102	NOTES AND LEGENDS
C-201 THRU C-203	SITE PREPARATION PLAN
C-301 THRU C-303	GRADING/PAVING/UTILITY PLAN
C-401 THRU C-403	HORIZ. CONTROL/SIGN/STRIPING PLAN
C-501	DETAILS

FRANK R. WEBB ARCHITECTS
www.frankrwebb.com Los Angeles | Fullerton

8407 Venice Boulevard Los Angeles, CA 90034
ph: 310.559.4717 fax: 310.559.9174

THESE DRAWINGS AND SPECIFICATIONS ARE IDEAS, DESIGNS AND ARRANGEMENTS REPRESENTED THEREBY ARE AND SHALL REMAIN THE PROPERTY OF THE ARCHITECT. NO PART THEREOF SHALL BE COPIED, DISCLOSED TO OTHERS, OR USED FOR ANY PURPOSE EXCEPT THE SPECIFIC PROJECT FOR WHICH THE STIPULATED PROJECT FOR WHICH THEY WERE PREPARED AND DEVELOPED WITHOUT THE WRITTEN CONSENT OF THE ARCHITECT. VISUAL CONTACT WITH THESE DRAWINGS OR SPECIFICATIONS SHALL CONSTITUTE CONCLUSIVE EVIDENCE OF ACCEPTANCE OF THESE RESTRICTIONS.

No.	Distribution/Revision	Date
	BID DOCUMENTS	7.7.2014

PSOMAS
3111 Camino Del Rio North, Suite 702
San Diego, CA 92108
(619) 961-2800 (619) 961-2392 fax
www.psomas.com

REGISTERED PROFESSIONAL ENGINEER JAMES S. BLISS No. 41755 Exp. 5-31-16 CIVIL STATE OF CALIFORNIA

City of Torrance
Torrance Transit Park and Ride
Regional Terminal
465 Crenshaw Blvd.
Torrance, CA 90503

Torrance Transit Park and Ride Regional Terminal

CLIENT PROJECT #: B2013-15

Drawing Title

CIVIL
TITLE SHEET

Scale: AS NOTED
IF DRAWING IS NOT 30"x42" THEN IT IS NOT TO SCALE

Location: LA
Project Manager: KF
Project No.: 13025
Date Plotted: 07/07/2014

Drawing No.
C-101

GENERAL NOTES

1. ALL WORK SHALL BE DONE IN ACCORDANCE WITH THE STANDARD SPECIFICATIONS FOR PUBLIC WORKS CONSTRUCTION, LATEST EDITION AND SUPPLEMENTS THERETO, AS WRITTEN AND PROMULGATED BY PUBLIC WORKS STANDARDS, INC., HEREINAFTER REFERRED TO AS THE STANDARD SPECIFICATIONS, THE TORRANCE STANDARDS, THE AMERICAN WATER WORKS ASSOCIATION STANDARDS LATEST EDITION, AND TO THE SATISFACTION OF THE ENGINEERING DIRECTOR.

2. IT SHALL BE THE RESPONSIBILITY OF THE CONTRACTOR TO LOCATE, VERIFY DEPTH AND PROTECT ALL STRUCTURES, INCLUDING SUBSTRUCTURES, SHOWN ON THE PLAN. THE CONTRACTOR SHALL BEAR THE ENTIRE COST OF REPAIRING OR REPLACING ANY OF SAID STRUCTURES DAMAGED BY HIM/HER DURING PROSECUTION OF THE WORK. ALL REPAIRS AND REPLACEMENTS SHALL BE DONE IN THE PRESENCE OF THE INSPECTOR. ALL LOCATIONS SHOWN ON THE PLAN FOR UTILITY LINES HAVE BEEN TAKEN FROM AVAILABLE RECORDS AND THEIR COMPLETENESS AND CORRECTNESS ARE IN NO WAY GUARANTEED.

3. THE CONTRACTOR SHALL NOTIFY UNDERGROUND SERVICE ALERT (USA) AT 1-800-227-2600 AND ALL PUBLIC UTILITY COMPANIES AND OWNERS OF PRIVATE FACILITIES WITHIN THE AREA OF CONSTRUCTION AT LEAST 2 WORKING DAYS IN ADVANCE OF PERFORMING ANY WORK WITHIN SAID AREA.

4. THE CONTRACTOR SHALL OBTAIN ALL NECESSARY PERMITS FROM THE ENGINEERING DIRECTOR BEFORE COMMENCING WORK. TRAFFIC CONTROL WITHIN PUBLIC STREET RIGHTS OF WAY SHALL BE IN CONFORMANCE WITH THE "CONSTRUCTION TRAFFIC CONTROL PROCEDURES ON CITY STREETS", LATEST EDITION AVAILABLE AT THE ENGINEERING DEPARTMENT. THE CONTRACTOR SHALL PROVIDE A 24-HOUR TELEPHONE NUMBER FOR EMERGENCY REPAIRS TO TRAFFIC CONTROL AND PAVEMENT MARKINGS.

5. CAUTION: REVIEW APPROVED CONSTRUCTION PLAN. IF CONSTRUCTION REQUIRES WORKERS AND/OR EQUIPMENT TO BE WITHIN 6 FEET OR CRANES OR HOISTING DEVICES TO BE WITHIN 10 FEET OF OVERHEAD ELECTRIC LINES, CALL SOUTHERN CALIFORNIA EDISON AT 310-783-9339 FOR PROJECTS IN RESIDENTIAL AREAS OR 310-783-9331 FOR PROJECTS IN COMMERCIAL AREAS.

6. PRIOR TO COMMENCEMENT OF WORK, ALL SURVEY MONUMENTS IN THE PROJECT AREA SHALL BE LOCATED AND TIED OUT. ALL CENTERLINE MONUMENTS OR TIES LOST OR DESTROYED BY THIS WORK SHALL BE REPLACED EITHER BY A LICENSED SURVEYOR OR A CIVIL ENGINEER REGISTERED PRIOR TO JANUARY 1, 1982 AND NEW TIE SHEETS PROVIDED. METHOD OF ESTABLISHMENT SHALL BE STATED ON THE TIE SHEET.

7. GRADE SHEETS PREPARED AND STAMPED BY A LICENSED ENGINEER OR SURVEYOR SHALL BE DELIVERED TO THE INSPECTOR PRIOR TO COMMENCEMENT OF WORK.

8. THE CONTRACTOR SHALL NOTIFY THE CITY STREET DEPARTMENT AT 310-781-6900 PRIOR TO TRIMMING, REMOVING OR RELOCATING ANY EXISTING TREES.

9. UNLESS OTHERWISE SHOWN, ALL TRAFFIC SIGNS SHALL BE RELOCATED OR REMOVED BY THE CITY. THE CONTRACTOR SHALL NOTIFY THE STREET DEPARTMENT AT 310-781-6900 AT LEAST 2 WORKING DAYS IN ADVANCE TO ARRANGE THE WORK.

WATER NOTES:

10. CONTRACTOR SHALL MAKE AVAILABLE FOR THE PUBLIC WORKS INSPECTOR'S REVIEW, ON A DAILY BASIS, AS-BUILT DRAWINGS FOR WORK PERFORMED UP TO AND INCLUDING THE PREVIOUS DAY'S ACTIVITIES. WORK SHALL NOT BE CONSIDERED AS COMPLETE UNTIL AS-BUILTS ARE SUBMITTED TO AND ACCEPTED BY THE ENGINEERING DIRECTOR.

11. TRENCHES CUT INTO AN EXISTING ROADWAY WITHIN THE PUBLIC RIGHTS OF WAY SHALL BE BACKFILLED AND PAVED AS PER CITY OF TORRANCE STANDARD T116.

12. TRENCH RESURFACING SHALL BE OF THE SAME TYPE AS THE EXISTING PAVEMENT, EXCEPT IF EXISTING PAVEMENT IS A.C. OVER P.C.C., RESURFACING MAYBE FULL-DEPTH A.C.

13. THE CONTRACTOR SHALL DISINFECT WATER LINES UNDER THE DIRECTION OF THE CITY'S WATER QUALITY INSPECTOR. THE TORRANCE MUNICIPAL WATER DEPARTMENT SHALL COLLECT WATER SAMPLES FOR ANALYSIS SUBSEQUENT TO DISINFECTING OF THE PIPELINE BY THE CONTRACTOR.

14. THE CONTRACTOR SHALL NOTIFY THE INSPECTOR AT LEAST TWO WORKING DAYS IN ADVANCE OF A PROPOSED WATER MAIN OR SERVICE LINE SHUT DOWN. THE CONTRACTOR SHALL NOTIFY THE CUSTOMERS EFFECTED BY THE PROPOSED SHUT DOWN AT LEAST 24 HOURS IN ADVANCE. CUSTOMER NOTIFICATION SHALL CONSIST OF A DOOR HANGER SPECIFING THE DATE(S) AND TIME(S) OF THE PROPOSED SHUT DOWN. NOTICE SHALL CONTAIN THE CONTRACTORS NAME AND TELEPHONE NUMBER. NOTICE SHALL BE APPROVED BY THE INSPECTOR PRIOR TO DISTRIBUTION.

15. OPERATION OF VALVES ON ALL PUBLIC WATER LINES AND THE FIRST NEW VALVE DOWNSTREAM OF A PUBLIC WATER MAIN SHALL BE PERFORMED BY THE TORRANCE MUNICIPAL WATER DEPARTMENT UNLESS OTHERWISE SHOWN.

16. ALL WATER LINES SHALL HAVE 42" COVER FROM PROPOSED FINISHED GRADE UNLESS OTHERWISE SHOWN ON THE PLAN.

17. FOR PARALLEL CONSTRUCTION ALL WATER LINES SHALL BE INSTALLED WITH A TWO FOOT (MIN.) CLEARANCE FROM EXISTING UTILITY LINES (GAS, TELEPHONE, CABLE, POWER...). A MINIMUM OF 12" CLEARANCE SHALL BE PROVIDED WHEN CROSSING UTILITY LINES.

18. NO PVC PIPE SHALL BE INSTALLED UPSTREAM OF THE INLET SIDE OF METERS OR DETECTOR CHECK VALVES.

19. PIPE BEDDING SHALL CONFORM TO TORRANCE STANDARD DRAWING T701.

20. ALL FLANGE NUTS, BOLTS AND WASHERS SHALL BE 316 S.S. UNLESS OTHERWISE SHOWN.

21. ALL BURIED PIPE, VALVES, FITTING, ETC. SHALL BE WRAPPED IN 8 MIL. POLYETHYLENE.

SEWER NOTES:

22. BEFORE BREAKING INTO OR CONSTRUCTION ON A COUNTY SANITATION DISTRICT SEWER AND PRIOR TO FINAL ACCEPTANCE OF THE PROJECT, COUNTY SANITATION DISTRICT INSPECTOR SHALL BE NOTIFIED BY PHONE AT 310-638-1161 IN ORDER THAT REQUIRED INSPECTION MAY BE MADE.

23. EXISTING DOWNSTREAM MANHOLES SHALL BE BULKHEADED WITH BRICK AND MORTAR OR PLUGS APPROVED BY THE INSPECTOR AT NEW INLET DURING CONSTRUCTION OF NEW UPSTREAM LINES. BRICK AND MORTAR OR PLUG SHALL BE REMOVED IN THE PRESENCE OF THE INSPECTOR(S) DURING CLEANING OF THE FIRST UPSTREAM SECTION OF THE NEW SYSTEM.

24. NO CONNECTION FOR THE DISPOSAL OF INDUSTRIAL WASTES SHALL BE MADE TO SEWERS SHOWN ON THESE DRAWINGS UNTIL A PERMIT FOR INDUSTRIAL WASTE WATER DISCHARGE HAS BEEN ISSUED BY THE COUNTY SANITATION DISTRICTS FOR SAID CONNECTION.

25. MANHOLE COVER SHALL BE CAST WITH THE WORDS "TORRANCE SEWER" FOR CITY MAINTAINED LINES AND "PRIVATE SEWER" FOR PRIVATELY MAINTAINED LINES.

26. ALL SEWER LINES CONSTRUCTED TO PUBLIC STANDARDS SHALL BE VITRIFIED CLAY PIPE (VCP). DUCTILE IRON PIPE MAY BE USED SUBJECT TO PRIOR WRITTEN APPROVAL FROM THE COMMUNITY DEVELOPMENT/PUBLIC WORKS DIRECTOR. ALL HOUSE CONNECTION LATERALS SHALL BE MINIMUM 6 INCH DIAMETER.

27. CONTRACTOR SHALL SET ALL MANHOLE FRAMES AND COVERS TO FINISHED GRADE.

28. CONCRETE ENCASEMENT SHALL BE REQUIRED FOR SEWER MAIN LINE AND HOUSE LATERALS WITH LESS THAN 3 FEET OF COVER.

STORM DRAIN NOTES:

29. STORM DRAIN CONNECTIONS TO THE L.A. COUNTY STORM DRAIN SYSTEM REQUIRE A PERMIT FROM L.A. COUNTY (1-626-458-3129) BEFORE ISSUANCE OF A CITY PERMIT.

30. IN CASE OF CONFLICT BETWEEN A CONNECTOR PIPE AND AN EXISTING UNDERGROUND LINE, THE CONNECTOR PIPE MAY BE REALIGNED OVER OR UNDER THE CONFLICTING LINE. CONNECTOR PIPE GRADES SHALL DRAIN POSITIVELY TOWARD THE MAIN LINE, AND WHERE GRADE BREAKS EXCEED FIVE DEGREES A CONCRETE COLLAR PER A.P.W.A. STD. DRAWING 380 SHALL BE CONSTRUCTED. APPROVAL FOR REALIGNMENT SHALL BE OBTAINED FROM THE COMMUNITY DEVELOPMENT/PUBLIC WORKS DIRECTOR PRIOR TO COMMENCEMENT OF WORK.

31. MANHOLE AND CATCH BASIN COVERS SHALL BE CAST WITH THE WORDS "TORRANCE DRAIN" FOR CITY MAINTAINED LINES AND "PRIVATE DRAIN" FOR PRIVATELY MAINTAINED LINES.

32. DURING NON-CONSTRUCTION HOURS, ALL EXCAVATIONS MUST BE APPROPRIATELY SHORED, PLATED OR BACKFILLED EXCEPT BORE PITS WHICH SHALL BE SECURED WITH K-RAIL AND 6' HIGH CHAIN LINK FENCE PANELS SECURED IN PLACE TO THE SATISFACTION OF THE PUBLIC WORKS INSPECTOR. STEEL PLATES SHALL BE TACK WELDED, PINNED AND/OR SECURED IN PLACE BY ANOTHER METHOD APPROVED BY THE INSPECTOR.

ABBREVIATIONS

ALL ABBREVIATIONS ARE PER SECTION 1-3 OF THE GREEN BOOK WITH THE ADDITIONS INDICATED BELOW:

ABAND	ABANDONED	MAT'L	MATERIAL
ASS'Y	ASSEMBLY	MIN	MINIMUM
BFD	BACKFLOW DEVICE	MJ	MECHANICAL JOINT
BO	BLOW-OFF	N.I.C.	NOT A PART OF THIS CONTRACT
CATV	CABLE TV	O/H	OVERHEAD
COMB	COMBINATION	PVC	POLYVINYL CHLORIDE
DI	DRAIN INLET	RSD	REGIONAL STANDARD DRAWINGS
DG	DECOMPOSED GRANITE	RT	RIGHT
E	ELECTRIC	R/W	RIGHT-OF-WAY
ELEV	ELEVATION	SMH	SEWER MANHOLE
EXIST.	EXISTING	SWQ	STORM WATER QUALITY
EJ	EXPANSION JOINT	SWR	SEWER
FH	FIRE HYDRANT	T	TELEPHONE
FLG/FLG'D	FLANGE/FLANGED	TB	TOP OF BERM
FS	FINISHED SURFACE	TG	TOP OF GRATE
GV	GATE VALVE	TP	TOP OF PIPE
HDPE	HIGH DENSITY POLYETHYLENE	U/G	UNDERGROUND
HP	HIGH PRESSURE	WM	WATER METER
INT	INTERSECTION	WTR	WATER
IE	INVERT ELEVATION		
LT	LEFT		

ENGINEER'S NOTICE TO CONTRACTORS

THE EXISTENCE AND LOCATION OF ANY UNDERGROUND UTILITY PIPES OF STRUCTURES SHOWN ON THESE PLANS WERE OBTAINED BY A SEARCH OF AVAILABLE RECORDS. THESE LOCATIONS ARE APPROXIMATE AND SHALL BE CONFIRMED IN THE FIELD BY THE CONTRACTOR, SO THAT ANY NECESSARY ADJUSTMENT CAN BE MADE IN ALIGNMENT AND/OR GRADE OF THE PROPOSED IMPROVEMENT. THE CONTRACTOR IS REQUIRED TO TAKE DUE PRECAUTIONARY MEASURE TO PROTECT ANY UTILITY LINES SHOWN AND ANY OTHER LINES NOT OF RECORD OR NOT SHOWN ON THESE PLANS.

PRIVATE ENGINEERING NOTE

CONSTRUCTION CONTRACTOR AGREES THAT IN ACCORDANCE WITH GENERALLY ACCEPTED CONSTRUCTION PRACTICES, CONSTRUCTION CONTRACTOR WILL BE REQUIRED TO ASSUME SOLE AND COMPLETE RESPONSIBILITY FOR JOB SITE CONDITIONS DURING THE COURSE OF CONSTRUCTION OF THE PROJECT, INCLUDING SAFETY OF ALL PERSONS AND PROPERTY, THAT THIS REQUIREMENT SHALL BE MADE TO APPLY CONTINUOUSLY AND NOT TO BE LIMITED TO NORMAL WORKING HOURS, AND CONSTRUCTION CONTRACTOR FURTHER AGREES TO DEFEND, INDEMNIFY AND HOLD THE CITY OF TORRANCE AND DESIGN PROFESSIONAL HARMLESS FROM ANY AND ALL LIABILITY, REAL OR ALLEGED, IN CONNECTION WITH THE PERFORMANCE OF WORK ON THIS PROJECT, EXCEPTING LIABILITY ARISING FROM THE SOLE NEGLIGENCE OF THE CITY OF TORRANCE AND/OR DESIGN PROFESSIONAL.

GEOTECHNICAL REPORT

A GEOTECHNICAL REPORT ENTITLED "GEOTECHNICAL SERVICES FOR ADVANCED CONCEPTUAL ENGINEERING, TORRANCE TRANSIT PARK & RIDE REGIONAL TERMINAL, 465 CRENSHAW BLVD., TORRANCE, CALIFORNIA" PREPARED BY "DIAZ YOURMAN & ASSOCIATES" DATED APRIL 14, 2014 HAS BEEN PREPARED FOR THIS PROJECT AND IS AVAILABLE FOR REVIEW BY THE CONTRACTOR FOR REFERENCE AT THE OFFICE OF THE CITY ENGINEER.

SWPPP NOTE

CONTRACTOR TO PROVIDE APPLICATION FOR GRADING PERMIT TO CITY PRIOR TO ANY SOIL DISTURBANCE. THE NOI MUST BE SUBMITTED TO CITY AT TIME OF GRADING PERMIT REQUEST. CONTRACTOR MUST MAINTAIN THE SERVICES OF A QUALIFIED SWPPP PRACTITIONER (QSP) DURING WORK OPERATIONS TO MONITOR OR THE WORK AND PROVIDE REQUIRED REPORTING INTO SMARTS.

CONTRACTOR SHALL IMPLEMENT & COMPLY WITH ALL REQUIREMENTS OUTLINED IN THE SWPPP PREPARED FOR THIS PROJECT. ALL EROSION & SEDIMENT CONTROL MEASURES SHALL COMPLY WITH THE 2003 EPA CONSTRUCTION GENERAL PERMIT.

SPECIAL NOTES

1. ALL OPERATIONS CONDUCTED ON THE PREMISES, INCLUDING THE WARMING UP, REPAIR, ARRIVAL, DEPARTURE, OR RUNNING OF TRUCKS, EARTHMOVING EQUIPMENT, CONSTRUCTION EQUIPMENT, AND ANY OTHER ASSOCIATED EQUIPMENT SHALL BE LIMITED TO THE PERIOD BETWEEN 6:00 AM AND 7:00 PM EACH DAY, MONDAY THROUGH FRIDAY, AND NO GRADING OR EARTHMOVING OPERATIONS SHALL BE CONDUCTED ON THE PREMISES ON SATURDAYS, SUNDAYS OR CITY OF EL CENTRO HOLIDAYS WITHOUT APPROVAL BY THE CITY ENGINEER. OVERTIME INSPECTIONS SHALL BE AT THE CONTRACTORS EXPENSE.

2. THE CONTRACTOR SHALL TAKE ALL PRECAUTIONARY MEASURES TO PROTECT EXISTING IMPROVEMENTS AND THE CITY OF EL CENTRO WILL ENFORCE SECTION 7-9 OF THE STANDARD SPECIFICATIONS FOR PUBLIC WORKS CONSTRUCTION.

3. ALL EXISTING IMPROVEMENTS INCLUDING A.C. BERM, A.C. OR P.C.C. PAVING, WHICH ARE BEING JOINED OR MATCHED IN CONNECTION WITH THIS PROJECT SHALL BE JOINED OR MATCHED IN A MANNER SATISFACTORY TO THE CITY ENGINEER, INCLUDING NECESSARY SAWCUTTING, REMOVAL, REPLACEMENT AND CAPPING.

4. THE CONTRACTOR SHALL DESIGN, PLACE AND MAINTAIN ALL SAFETY DEVICES INCLUDING SHORING AND BARRICADING, AND SHALL BE SOLELY RESPONSIBLE FOR CONFORMING TO ALL LOCAL, STATE AND FEDERAL SAFETY AND HEALTH STANDARDS, LAWS AND REGULATIONS. THE CONTRACTOR IS REFERRED TO SECTION 7-10 "PUBLIC CONVENIENCE AND SAFETY" OF THE STANDARD SPECIFICATIONS FOR PUBLIC WORKS CONSTRUCTION.

5. ANY CONTRACTOR PERFORMING WORK ON THE PROJECT SITE SHALL FAMILIARIZE SELF WITH THE SITE AND SHALL BE SOLELY RESPONSIBLE FOR ANY DAMAGE TO EXISTING FACILITIES RESULTING DIRECTLY OR INDIRECTLY FROM OPERATIONS. THE CONTRACTOR IS REFERRED TO SECTION 7-9 "PROTECTION AND RESTORATION OF EXISTING IMPROVEMENTS" OF THE STANDARD SPECIFICATIONS FOR PUBLIC WORKS CONSTRUCTION.

6. ACCESS FOR FIRE AND OTHER EMERGENCY VEHICLES SHALL BE MAINTAINED AT ALL TIMES DURING PROJECT CONSTRUCTION.

7. THE CONTRACTOR SHALL MAINTAIN ADEQUATE DUST CONTROL MEASURES THROUGHOUT THE DURATION OF PROJECT CONSTRUCTION. PROJECT SITE MAINTENANCE SHALL CONFORM TO SECTION 7-8 "PROJECT SITE MAINTENANCE" OF THE STANDARD SPECIFICATIONS FOR PUBLIC WORKS CONSTRUCTION.

8. ALL DISTANCES AND DIMENSIONS SHOWN ON THE PLANS ARE IN A HORIZONTAL PLANE UNLESS OTHERWISE NOTED.

9. THE CONTRACTOR SHALL BE RESPONSIBLE FOR THE REPLACEMENT OF ANY PAVEMENT STRIPING OR MARKINGS REMOVED OR MADE ILLEGIBLE AS A RESULT OF HIS WORK.

10. APPROVAL OF THESE PLANS AS SHOWN DOES NOT CONSTITUTE APPROVAL OF ANY CONSTRUCTION OUTSIDE THE PROJECT LIMITS OF WORK.

11. LOCATION AND ELEVATION OF IMPROVEMENTS SHALL BE CONFIRMED BY FIELD MEASUREMENTS PRIOR TO CONSTRUCTION. THE CONTRACTOR SHALL MAKE EXPLORATORY EXCAVATIONS AND LOCATE EXISTING UNDERGROUND FACILITIES SUFFICIENTLY AHEAD OF CONSTRUCTION TO PERMIT REVISIONS TO PLANS IF NECESSARY BECAUSE OF DISCREPANCIES.

12. NEITHER THE CITY OF TORRANCE, NOR THE ENGINEER OF WORK, WILL ENFORCE SAFETY MEASURES OR REGULATIONS. THE CONTRACTOR SHALL DESIGN, CONSTRUCT, AND MAINTAIN ALL SAFETY DEVICES, INCLUDING SHORING, AND SHALL BE SOLELY RESPONSIBLE FOR CONFORMING TO ALL LOCAL, STATE, AND FEDERAL SAFETY AND HEALTH STANDARDS, LAWS, AND REGULATIONS.

13. THE CONTRACTOR AGREES TO ASSUME SOLE AND COMPLETE RESPONSIBILITY FOR JOB SITE CONDITIONS DURING THE COURSE OF CONSTRUCTION OF THIS PROJECT, INCLUDING SAFETY OF ALL PERSONS AND PROPERTY; THAT THIS REQUIREMENT SHALL APPLY CONTINUOUSLY AND NOT BE LIMITED TO NORMAL WORKING HOURS; AND THAT THE CONTRACTOR SHALL DEFEND, INDEMNIFY, AND HOLD THE OWNER AND THE ENGINEER HARMLESS FROM ANY AND ALL LIABILITY, REAL OR ALLEGED, IN CONNECTION WITH THE PERFORMANCE OF WORK ON THIS PROJECT, EXCEPTING FOR LIABILITY ARISING FROM THE SOLE NEGLIGENCE OF THE OWNER OR THE ENGINEER.

14. THE ENGINEER OF WORK SHALL NOT BE RESPONSIBLE FOR THE CONTRACTOR'S FAILURE TO CARRY OUT THE CONSTRUCTION WORK IN ACCORDANCE WITH THE CONTRACT DOCUMENTS, NOR SHALL HE BE REQUIRED TO SUPERVISE THE CONDUCT OF THE WORK OR THE CONSTRUCTION PROCEDURES FOLLOWED BY THE CONTRACTOR OR SUBCONTRACTORS OR THEIR RESPECTIVE EMPLOYEES OR BY ANY OTHER PERSON AT THE JOB SITE OTHER THAN THAT OF THE ENGINEER'S EMPLOYEES.

BUILDING AND GRADING PERMIT REQUIREMENTS

CONTRACTOR IS RESPONSIBLE FOR PULLING BOTH THE BUILDING PERMIT & GRADING PERMIT, INCLUDING PAYMENT OF ALL PERMIT FEES, FROM THE CITY FOR THIS PROJECT PRIOR TO THE START OF CONSTRUCTION.

IN ORDER TO PULL THE GRADING PERMIT THE CONTRACTOR MUST SUBMIT PROOF THAT THE STORMWATER NOTICE OF INTENT (NOI) HAS BEEN SUBMITTED & ACCEPTED BY THE STATES SMARTS SYSTEM & A W.D.I.D. HAS BEEN ASSIGNED TO THE PROJECT.

WORK TO BE DONE

THE IMPROVEMENTS CONSIST OF THE FOLLOWING WORK TO BE DONE ACCORDING TO THESE PLANS AND THE SPECIFICATIONS AND STANDARD DRAWINGS LISTED BELOW.

STANDARD SPECIFICATIONS

1) STANDARD SPECIFICATIONS FOR PUBLIC WORKS CONSTRUCTION (LATEST EDITION)
2) CALIFORNIA DEPARTMENT OF TRANSPORTATION, "MANUAL OF TRAFFIC CONTROLS FOR CONSTRUCTION AND MAINTENANCE WORK ZONES" (MAY 19, 2004)

STANDARD DRAWINGS

CITY OF TORRANCE STANDARD DRAWINGS, (LATEST EDITION)

STANDARD PLANS FOR PUBLIC WORKS CONSTRUCTION (SPPWC) (LATEST EDITION)

NEW IMPROVEMENTS

ITEM DESCRIPTION	STD DWG NO./DETAIL NO.	SYMBOL
6" CURB	SPPWC 120	
6" CURB & GUTTER	SPPWC 120	
CURB RAMP	SPPWC 111	
SIDEWALK	SPPWC 110	
CONCRETE PAVEMENT	1/C-501, 3/C-501	
PEDESTRIAN PLAZA PAVEMENT	(PER LANDSCAPE PLANS)	
ASPHALT CONCRETE PAVEMENT	3/C-501	
LANDSCAPE AREA		
4" PVC FIRE WATER LINE	5/C-501	—FW—
PVC DOMESTIC WATER LINE (SIZE AS SHOWN)	5/C-501	—W—
4" FIRE SERVICE/DCDA	T 710	—FW—BFD
4" OR 6" PVC SEWER LINE	5/C-501	—S—
SEWER CLEANOUT	6/C-501, 7/C-501	—S—o—
SEWER MANHOLE	SPPWC 200-3	—S—O—
STORM DRAIN (SIZE/TYPE AS SHOWN)	4/C-501	
CATCH BASIN (SIZE AS SHOWN)	9/C-501	
CURB INLET	SPPWC 300-3	
CLEANOUT	SPPWC 321-2	
DOWNSPOUT CONNECTION/CLEANOUT (ALIGN W/DOWNSPOUT ON PLUMBING PLANS)	12/C-501	
CURB OPENING	10/C-501	
SIDEWALK UNDERDRAIN	13/C-501	
STORMWATER BMP/WEIR/OUTLET	8/C-501	
STORMWATER BMP/WEIR	11/C-501	

EXISTING CONDITIONS

ITEM	SYMBOL
EXISTING SEWER LINE	S
EXISTING SEWER CLEANOUT	
EXISTING SEWER MANHOLE	SMH OR SMH
EXISTING WATER LINE	
EXISTING WATER METER	WM
EXISTING WATER VALVE	
EXISTING FIRE HYDRANT	FH
EXISTING STORM DRAIN LINE	SD
EXISTING STORM DRAIN INLET	DI
EXISTING POWER POLE	
EXISTING ELECTRIC OR UNDERGROUND	E
EXISTING STREET LIGHT	
EXISTING GAS LINE	G
EXISTING TELEPHONE LINE	T
EXISTING TELEPHONE PEDESTAL	
EXISTING CABLE TV LINE	CATV
EXISTING PULL BOX	
EXISTING SIGN	
EXISTING TREE/BUSH	
EXISTING BOLLARD	
EXISTING FENCE	

FRANK R. WEBB ARCHITECTS
www.teamfwa.com Los Angeles | Fullerton

8607 Venice Boulevard Los Angeles, CA 90034
ph: 310.559.4717 fax: 310.559.9174

THESE DRAWINGS AND SPECIFICATIONS AND IDEAS, DESIGNS AND ARRANGEMENTS REPRESENTED THEREBY ARE AND SHALL REMAIN THE PROPERTY OF THE ARCHITECT; NO PART THEREOF SHALL BE COPIED, DISCLOSED TO OTHERS, OR USED IN CONNECTION WITH ANY WORK OR PROJECT OTHER THAN THE SPECIFIED PROJECT FOR WHICH THEY HAVE BEEN PREPARED AND DEVELOPED WITHOUT THE WRITTEN CONSENT OF THE ARCHITECT. VISUAL CONTACT WITH THESE DRAWINGS OR SPECIFICATIONS SHALL CONSTITUTE CONCLUSIVE EVIDENCE OF ACCEPTANCE OF THESE RESTRICTIONS.

No.	Distribution/Revision	Date
	BID DOCUMENTS	7.7.2014

PSOMAS
3111 Camino Del Rio North, Suite 702
San Diego, CA 92108
(619) 961-2800 (619) 961-2392 fax
www.psomas.com

REGISTERED PROFESSIONAL ENGINEER
JAMES S. BLISS
No. 41795
Exp. 3-31-16
CIVIL
STATE OF CALIFORNIA

A BALANCED CITY
INDUSTRIAL-RESIDENTIAL-COMMERCIAL
TORRANCE

City of Torrance
Torrance Transit Park and Ride
Regional Terminal
465 Crenshaw Blvd.
Torrance, CA 90503

Torrance Transit Park and Ride Regional Terminal

CLIENT PROJECT #: B2013-15

Drawing Title

CIVIL
NOTES AND LEGEND

Scale: NONE AS NOTED
IF DRAWING IS NOT 30"x42" THEN IT IS NOT TO SCALE

Location: LA
Project Manager: KF
Project No.: 13025
Date Plotted: 07/07/2014

Drawing No. C-102

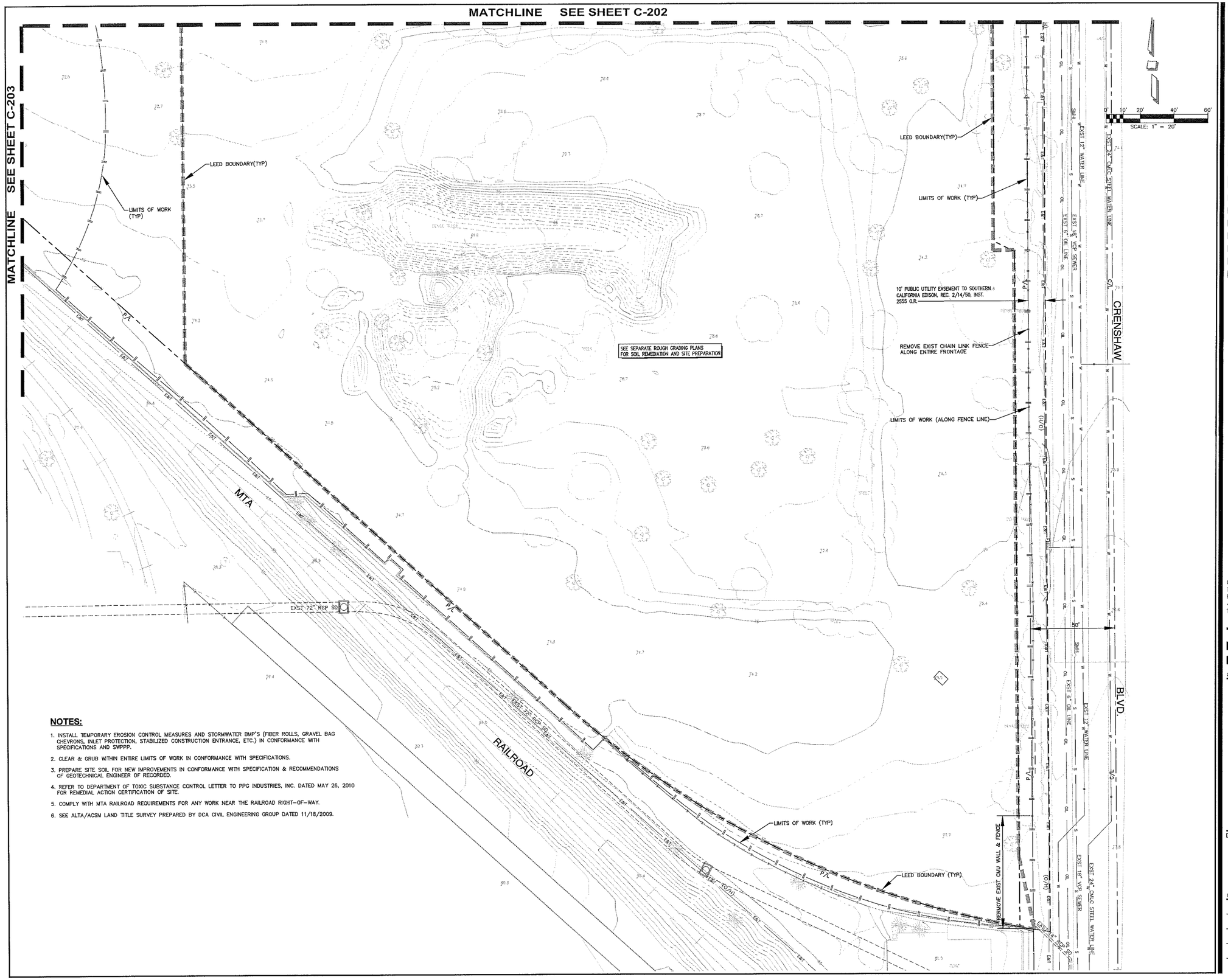

NOTES:

1. INSTALL TEMPORARY EROSION CONTROL MEASURES AND STORMWATER BMP'S (FIBER ROLLS, GRAVEL BAG CHEVRONS, INLET PROTECTION, STABILIZED CONSTRUCTION ENTRANCE, ETC.) IN CONFORMANCE WITH SPECIFICATIONS AND SWPPP.
2. CLEAR & GRUB WITHIN ENTIRE LIMITS OF WORK IN CONFORMANCE WITH SPECIFICATIONS.
3. PREPARE SITE SOIL FOR NEW IMPROVEMENTS IN CONFORMANCE WITH SPECIFICATION & RECOMMENDATIONS OF GEOTECHNICAL ENGINEER OF RECORDED.
4. REFER TO DEPARTMENT OF TOXIC SUBSTANCE CONTROL LETTER TO PPG INDUSTRIES, INC. DATED MAY 26, 2010 FOR REMEDIAL ACTION CERTIFICATION OF SITE.
5. COMPLY WITH MTA RAILROAD REQUIREMENTS FOR ANY WORK NEAR THE RAILROAD RIGHT-OF-WAY.
6. SEE ALTA/ACSM LAND TITLE SURVEY PREPARED BY DCA CIVIL ENGINEERING GROUP DATED 11/18/2009.

FRANK R. WEBB ARCHITECTS
www.teamfrw.com Los Angeles | Fullerton

8607 Venice Boulevard Los Angeles, CA 90034
ph: 310.559.4717 fax: 310.559.9174

THIS DRAWINGS AND SPECIFICATIONS AND EMAIL DESIGNS AND ARRANGEMENTS REPRESENTED THEREIN ARE AND SHALL REMAIN THE PROPERTY OF THE ARCHITECT; NO PART THEREOF SHALL BE COPIED, DISCLOSED TO OTHERS, OR USED IN CONNECTION WITH ANY WORK OR PROJECT OTHER THAN THE SPECIFIED PROJECT FOR WHICH THEY HAVE BEEN PREPARED AND DEVELOPED WITHOUT THE WRITTEN CONSENT OF THE ARCHITECT. ACCEPTANCE OF THESE DRAWINGS OR SPECIFICATIONS SHALL CONSTITUTE CONCLUSIVE EVIDENCE OF ACCEPTANCE OF THESE RESTRICTIONS.

No.	Distribution/Revision	Date
	BID DOCUMENTS	7.7.2014

PSOMAS
3111 Camino Del Rio North, Suite 702
San Diego, CA 92108
(619) 961-2800 (619) 961-2392 fax
www.psomas.com

REGISTERED PROFESSIONAL ENGINEER JAMES S. BLISSER No. 41795 Exp. 5-31-16 CIVIL STATE OF CALIFORNIA

A BALANCED CITY INDUSTRIAL-RESIDENTIAL-COMMERCIAL TORRANCE

City of Torrance
Torrance Transit Park and Ride
Regional Terminal
465 Crenshaw Blvd.
Torrance, CA 90503

Torrance Transit Park and Ride Regional Terminal

CLIENT PROJECT #: B2013-15

Drawing Title

CIVIL SITE PREPARATION PLAN

Scale: 1" = 20' AS NOTED
IF DRAWING IS NOT 30"x42" THEN IT IS NOT TO SCALE

Location	LA
Project Manager	KF
Project No.	13025
Date Plotted	07/07/2014

Drawing No.
C-201

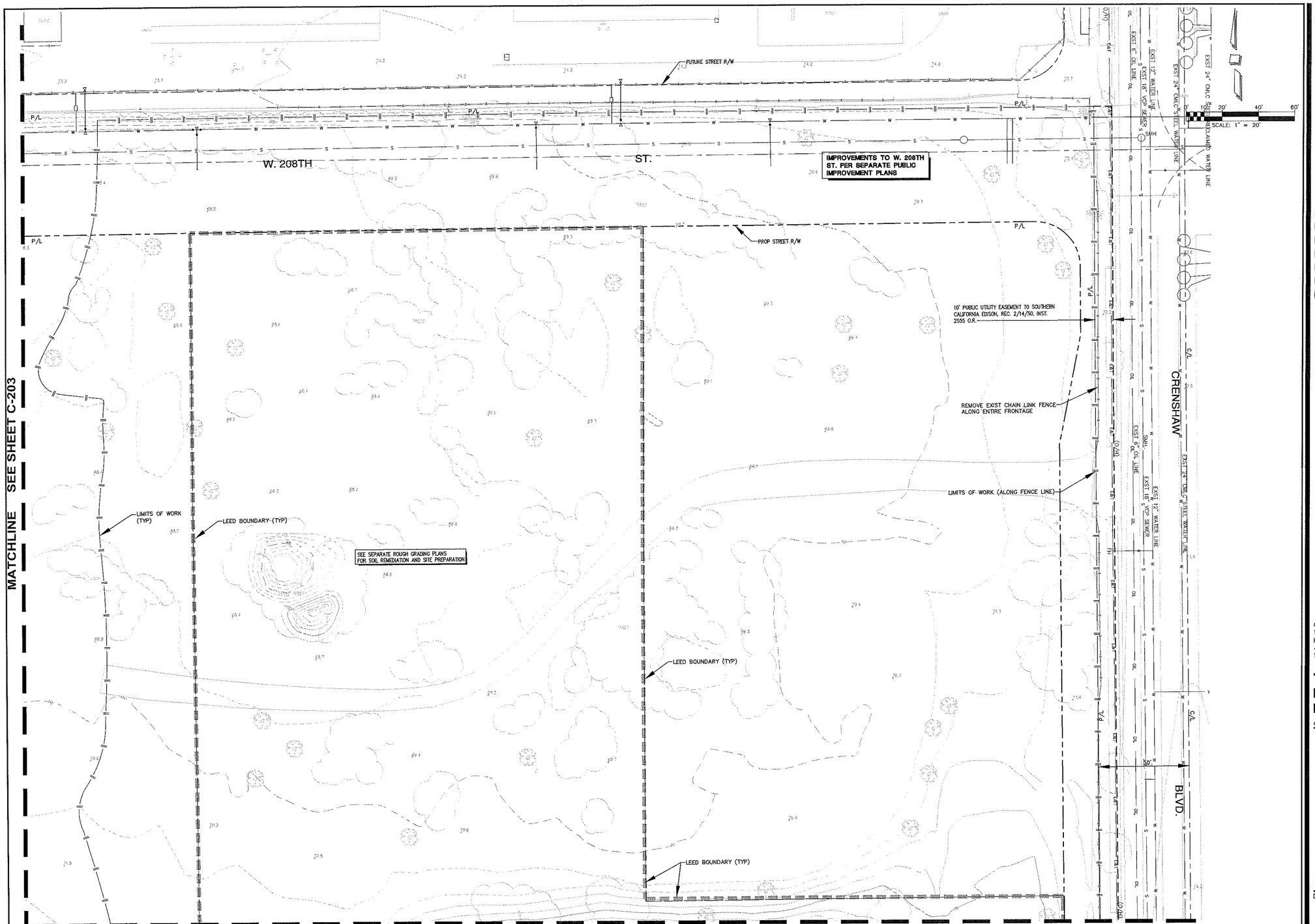

NOTES:

1. INSTALL TEMPORARY EROSION CONTROL MEASURES AND STORMWATER BMP'S (FIBER ROLLS, GRAVEL BAG CHEVRONS, INLET PROTECTION, STABILIZED CONSTRUCTION ENTRANCE, ETC.) IN CONFORMANCE WITH SPECIFICATIONS AND SWPPP.
2. CLEAR & GRUB WITHIN ENTIRE LIMITS OF WORK IN CONFORMANCE WITH SPECIFICATIONS.
3. PREPARE SITE SOIL FOR NEW IMPROVEMENTS IN CONFORMANCE WITH SPECIFICATION & RECOMMENDATIONS OF GEOTECHNICAL ENGINEER OF RECORDED.
4. REFER TO DEPARTMENT OF TOXIC SUBSTANCE CONTROL LETTER TO PPG INDUSTRIES, INC. DATED MAY 26, 2010 FOR REMEDIAL ACTION CERTIFICATION OF SITE.
5. COMPLY WITH MTA RAILROAD REQUIREMENTS FOR ANY WORK NEAR THE RAILROAD RIGHT-OF-WAY.
6. SEE ALTA/ACSM LAND TITLE SURVEY PREPARED BY DCA CIVIL ENGINEERING GROUP DATED 11/18/2009.

FRANK R. WEBB ARCHITECTS
www.frankrwebb.com Los Angeles | Fullerton

8607 Venice Boulevard Los Angeles, CA 90034
ph: 310.837.4717 fax: 310.837.9174

THESE DRAWINGS AND SPECIFICATIONS AND EMAIL DESIGNS AND ARRANGEMENTS REPRESENTED THEREBY ARE AND SHALL REMAIN THE PROPERTY OF THE ARCHITECT. NO PART THEREOF SHALL BE COPIED, DISCLOSED TO OTHERS, OR USED IN CONNECTION WITH ANY WORK ON PROJECT OTHER THAN THE SPECIFIED PROJECT FOR WHICH THEY HAVE BEEN PREPARED AND DEVELOPED WITHOUT THE WRITTEN CONSENT OF THE ARCHITECT. ANY USE WITH OTHER DRAWINGS OR SPECIFICATIONS SHALL CONSTITUTE CONCLUSIVE EVIDENCE OF ACCEPTANCE OF THESE RESTRICTIONS.

No.	Distribution/Revision	Date
	BID DOCUMENTS	7.7.2014

PSOMAS
3111 Camino Del Rio North, Suite 702
San Diego, CA 92108
(619) 961-2800 (619) 961-2392 fax
www.psomas.com

REGISTERED PROFESSIONAL ENGINEER JAMES S. BLISS No. 41798 Exp. 3-31-16 CIVIL STATE OF CALIFORNIA

A BALANCED CITY TORRANCE INDUSTRIAL-RESIDENTIAL-COMMERCIAL

City of Torrance
Torrance Transit Park and Ride
Regional Terminal
465 Crenshaw Blvd.
Torrance, CA 90503

Torrance Transit Park and Ride Regional Terminal

CLIENT PROJECT #: 82013-15

Drawing Title

CIVIL SITE PREPARATION PLAN

Scale: 1" = 20' AS NOTED
IF DRAWING IS NOT 30"x42" THEN IT IS NOT TO SCALE

Location: LA
Project Manager: KF
Project No.: 13025
Date Plotted: 07/07/2014

Drawing No. C-202

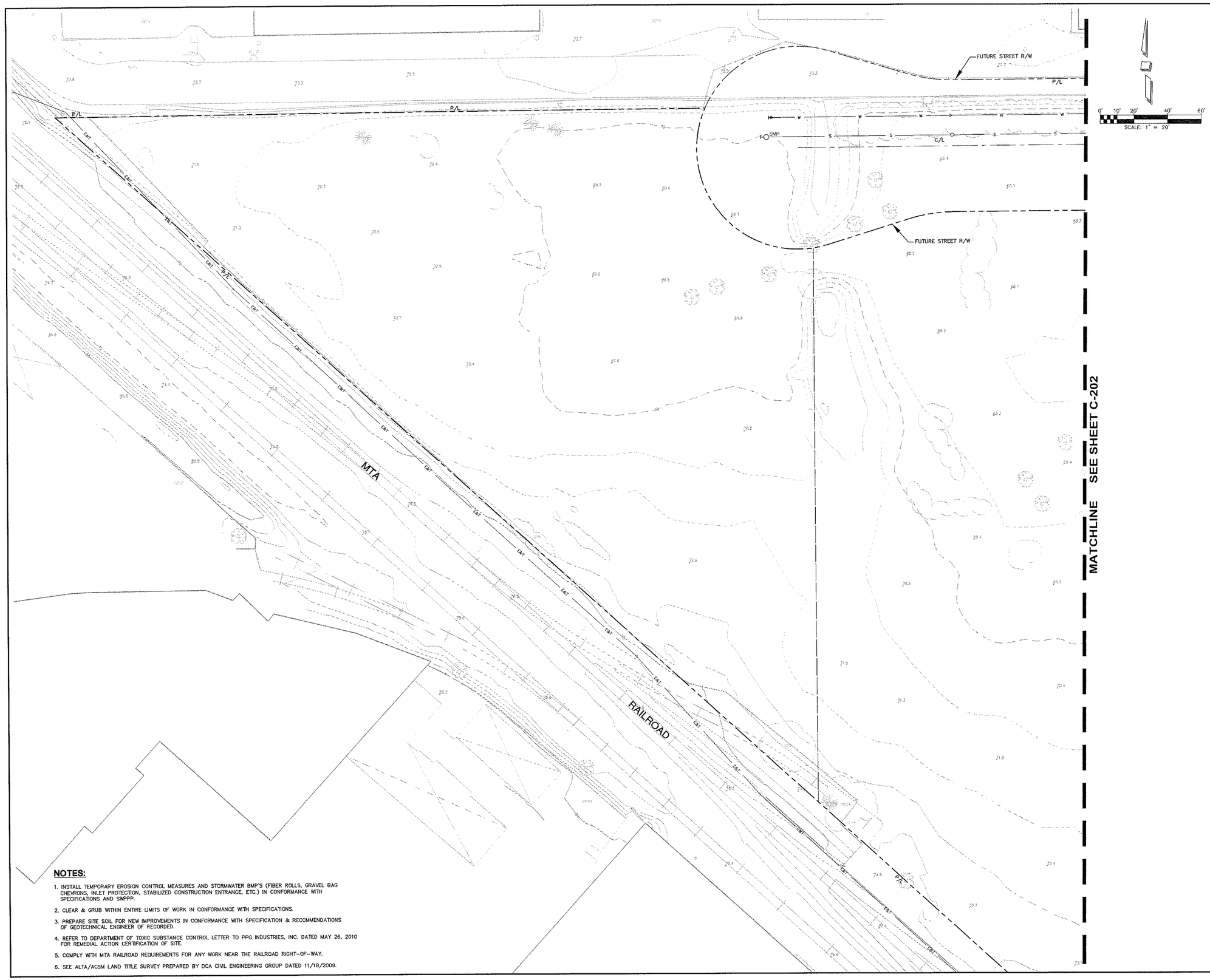

NOTES:

1. INSTALL TEMPORARY EROSION CONTROL MEASURES AND STORMWATER BMP'S (FIBER ROLLS, GRAVEL BAG CHEVRONS, INLET PROTECTION, STABILIZED CONSTRUCTION ENTRANCE, ETC.) IN CONFORMANCE WITH SPECIFICATIONS AND SWPPP.
2. CLEAR & GRUB WITHIN ENTIRE LIMITS OF WORK IN CONFORMANCE WITH SPECIFICATIONS.
3. PREPARE SITE SOIL FOR NEW IMPROVEMENTS IN CONFORMANCE WITH SPECIFICATION & RECOMMENDATIONS OF GEOTECHNICAL ENGINEER OF RECORDED.
4. REFER TO DEPARTMENT OF TOXIC SUBSTANCE CONTROL LETTER TO PPG INDUSTRIES, INC. DATED MAY 26, 2010 FOR REMEDIAL ACTION CERTIFICATION OF SITE.
5. COMPLY WITH MTA RAILROAD REQUIREMENTS FOR ANY WORK NEAR THE RAILROAD RIGHT-OF-WAY.
6. SEE ALTA/ACSM LAND TITLE SURVEY PREPARED BY DCA CIVIL ENGINEERING GROUP DATED 11/18/2009.

FRANK R. WEBB
ARCHITECTS
www.frankrwebb.com Los Angeles | Fullerton

5607 Venice Boulevard Los Angeles, CA 90034
ph: 310.839.4717 fax: 310.839.9174

THESE DRAWINGS AND SPECIFICATIONS AND IDEAS, DESIGNS AND ARRANGEMENTS REPRESENTED THEREIN ARE AND SHALL REMAIN THE PROPERTY OF THE ARCHITECT. NO PART THEREOF SHALL BE COPIED, DISCLOSED TO OTHERS, OR USED IN CONNECTION WITH ANY WORK OR PROJECT OTHER THAN THE SPECIFIED PROJECT FOR WHICH THEY HAVE BEEN PREPARED AND DEVELOPED WITHOUT THE WRITTEN CONSENT OF THE ARCHITECT. ALL REPRODUCTIONS OF THESE DRAWINGS OR SPECIFICATIONS SHALL CONSTITUTE CONCLUSIVE EVIDENCE OF ACCEPTANCE OF THESE RESTRICTIONS.

No.	Distribution/Revision	Date
	BID DOCUMENTS	7.7.2014

PSOMAS
3111 Camino Del Rio North, Suite 702
San Diego, CA 92108
(619) 961-2800 (619) 961-2392 fax
www.psomas.com

REGISTERED PROFESSIONAL ENGINEER JAMES S. BLISS No. 41798 Exp. 3-31-16 CIVIL STATE OF CALIFORNIA

City of Torrance
Torrance Transit Park and Ride
Regional Terminal
465 Crenshaw Blvd.
Torrance, CA 90503

Torrance Transit Park and Ride Regional Terminal

CLIENT PROJECT #: 82013-15

Drawing Title

CIVIL SITE PREPARATION PLAN

Scale: 1" = 20' AS NOTED
IF DRAWING IS NOT 30"x42" THEN IT IS NOT TO SCALE

Location: LA
Project Manager: KF
Project No.: 13025
Date Plotted: 07/07/2014

Drawing No.
C-203

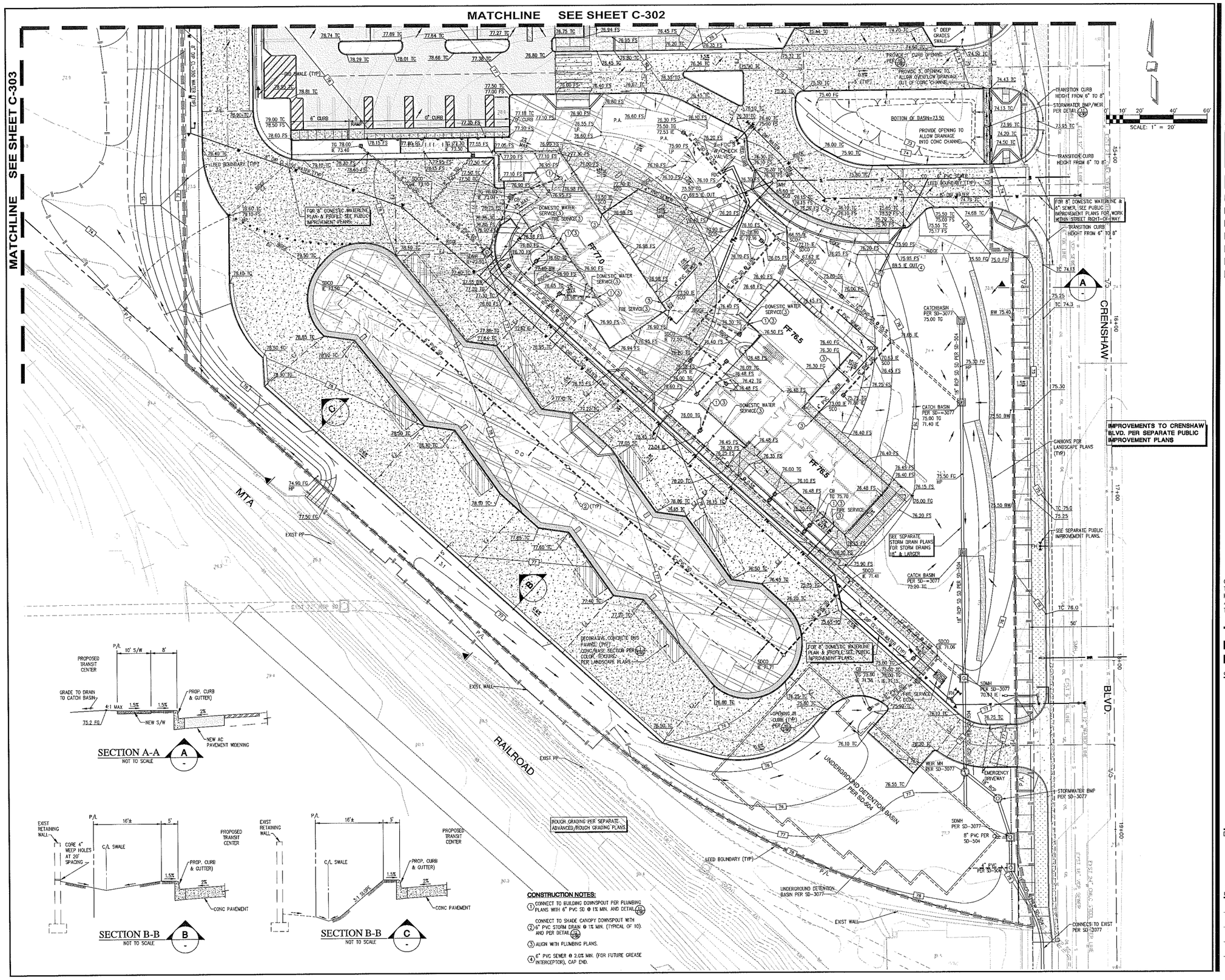

CONSTRUCTION NOTES:

1. CONNECT TO BUILDING DOWNSPOUT PER PLUMBING PLANS WITH 6" PVC SD @ 1% MIN. AND DETAIL
   CONNECT TO SHADE CANOPY DOWNSPOUT WITH
2. 6" PVC STORM DRAIN @ 1% MIN. (TYPICAL OF 10). AND PER DETAIL
3. ALIGN WITH PLUMBING PLANS.
4. 6" PVC SEWER @ 2.0% MIN. (FOR FUTURE GREASE INTERCEPTOR), CAP END.

FRANK R. WEBB ARCHITECTS
www.frwarchitects.com Los Angeles | Fullerton
8407 Venice Boulevard Los Angeles, CA 90034
PH: 310.837.4717 Fax: 310.837.9174

THESE DRAWINGS AND SPECIFICATIONS AND IDEAS, DESIGNS AND ARRANGEMENTS REPRESENTED THEREIT ARE AND SHALL REMAIN THE PROPERTY OF THE ARCHITECT. NO PART THEREOF SHALL BE COPIED, DISCLOSED TO OTHERS, OR USED IN OTHER WORK FOR ANY PURPOSE EXCEPTING THE SPECIFIED PROJECT FOR WHICH THEY HAVE BEEN PREPARED AND DEVELOPED WITHOUT THE WRITTEN CONSENT OF THE ARCHITECT. VISUAL CONTACT WITH THESE DRAWINGS OR SPECIFICATIONS SHALL CONSTITUTE CONCLUSIVE EVIDENCE OF ACCEPTANCE OF THESE RESTRICTIONS.

No.	Distribution/Revision	Date
	BID DOCUMENTS	7.7.2014

PSOMAS
3111 Camino Del Rio North, Suite 702
San Diego, CA 92108
(619) 961-2800 (619) 961-2392 fax
www.psomas.com

REGISTERED PROFESSIONAL ENGINEER JAMES S. BLISS No. 41798 Exp. 5-31-16 CIVIL STATE OF CALIFORNIA

City of Torrance
Torrance Transit Park and Ride
Regional Terminal
465 Crenshaw Blvd.
Torrance, CA 90503

Torrance Transit Park and Ride Regional Terminal

CLIENT PROJECT #: B2013-13

Drawing Title

CIVIL GRADING/PAVING/UTILITY PLAN

Scale: 1" = 20' AS NOTED
IF DRAWING IS NOT 30"x42" THEN IT IS NOT TO SCALE

Location: LA
Project Manager: KF
Project No.: 13025
Date Plotted: 07/07/2014

Drawing No. C-301

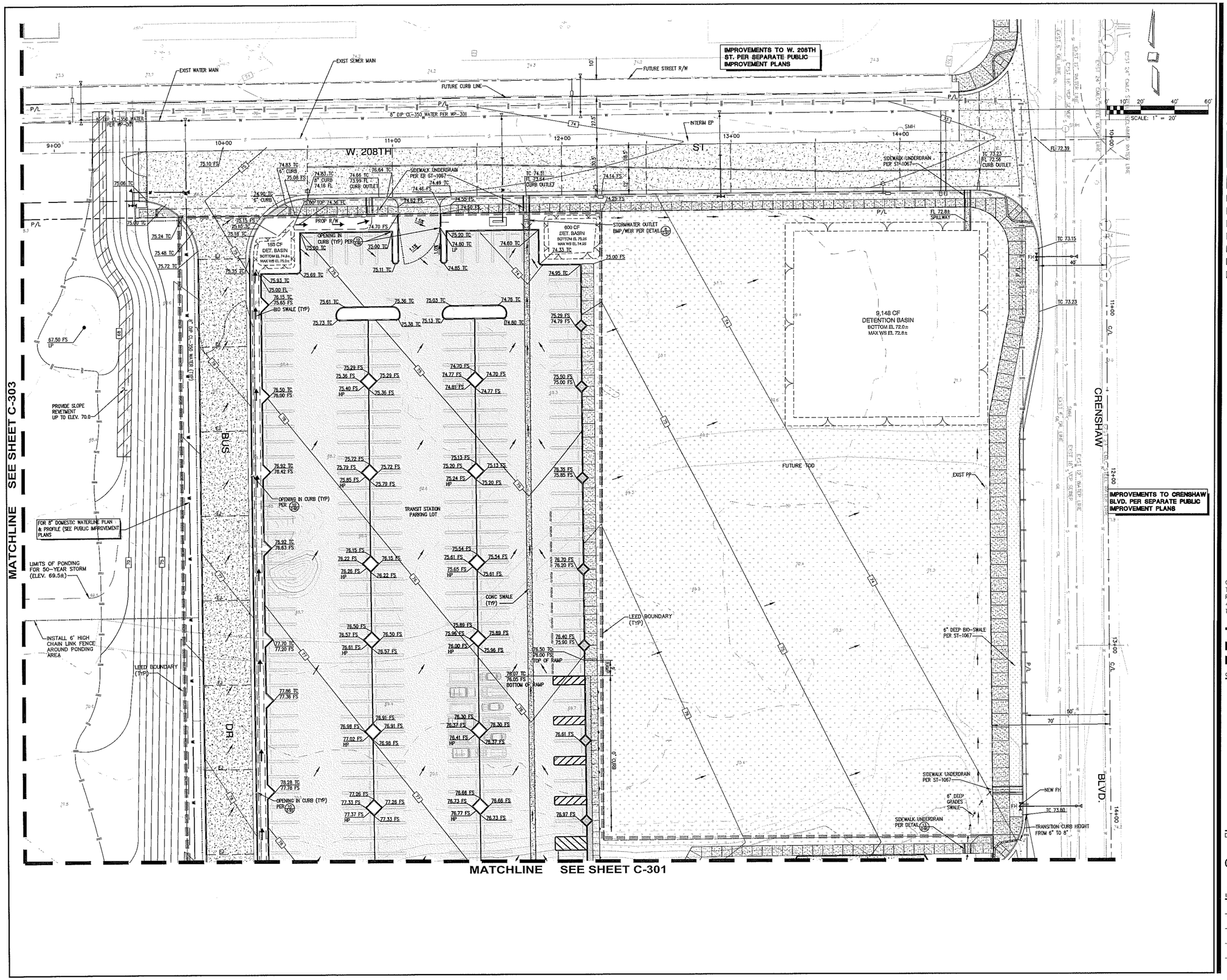

FRANK R. WEBB ARCHITECTS
www.frankrwebb.com Los Angeles | Fullerton

8407 Venice Boulevard Los Angeles, CA 90034
ph: 310.559.4717 fax: 310.559.9174

THESE DRAWINGS AND SPECIFICATIONS AND IDEAS, DESIGNS AND ARRANGEMENTS REPRESENTED THEREIN ARE AND SHALL REMAIN THE PROPERTY OF THE ARCHITECT. NO PART THEREOF SHALL BE COPIED, DISCLOSED TO OTHERS OR USED IN CONNECTION WITH ANY WORK OR PROJECT OTHER THAN THE SPECIFIED PROJECT FOR WHICH THEY HAVE BEEN PREPARED AND DEVELOPED. WRITTEN CONSENT OF THE ARCHITECT, WHICH CONSENT IS NOT IMPLIED BY THE ISSUANCE OF SUCH DRAWINGS OR SPECIFICATIONS SHALL CONSTITUTE CONCLUSIVE EVIDENCE OF ACCEPTANCE OF THESE RESTRICTIONS.

No.	Distribution/Revision	Date
	BID DOCUMENTS	7.7.2014

PSOMAS
3111 Camino Del Rio North, Suite 702
San Diego, CA 92108
(619) 881-2800 (619) 961-2392 fax
www.psomas.com

REGISTERED PROFESSIONAL ENGINEER JAMES S. BLISS No. 41793 Exp. 3-31-16 CIVIL STATE OF CALIFORNIA

City of Torrance
Torrance Transit Park and Ride
Regional Terminal
465 Crenshaw Blvd.
Torrance, CA 90503

Torrance Transit Park and Ride Regional Terminal

CLIENT PROJECT #: 82013-15

Drawing Title

CIVIL GRADING/PAVING/UTILITY PLAN

Scale: 1" = 20' AS NOTED
IF DRAWING IS NOT 30"x42" THEN IT IS NOT TO SCALE

Location: LA.
Project Manager: KF
Project No.: 13025
Date Plotted: 07/07/2014

Drawing No. C-302

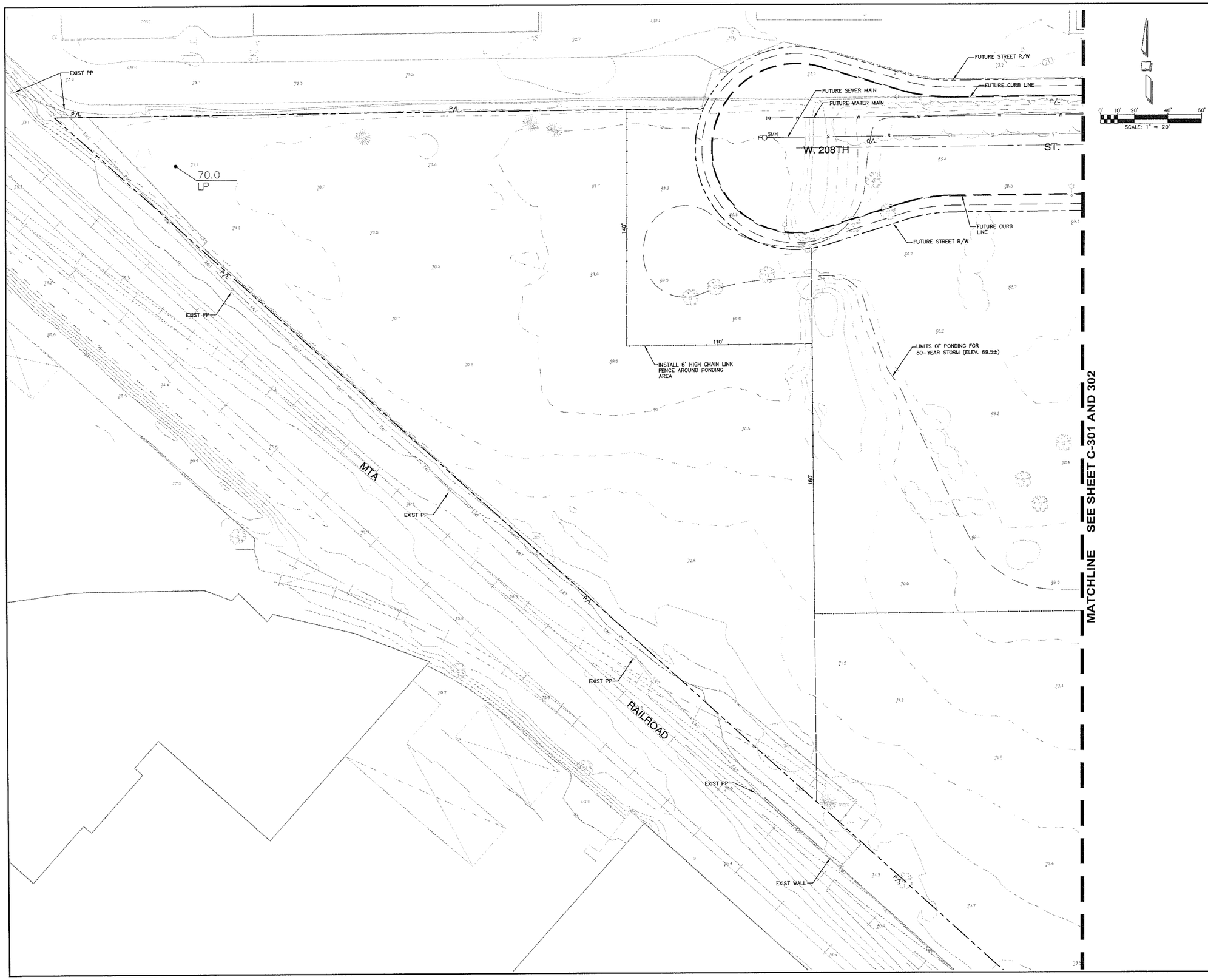

FRANK R. WEBB
ARCHITECTS
www.teamfrw.com Los Angeles | Fullerton

8607 Venice Boulevard Los Angeles, CA 90034
ph: 310.839.4717 fax: 310.839.9174

THESE DRAWINGS AND SPECIFICATIONS AND IDEAS, DESIGNS AND ARRANGEMENTS REPRESENTED THEREIT ARE AND SHALL REMAIN THE PROPERTY OF THE ARCHITECT. NO PART THEREOF SHALL BE COPIED, DISCLOSED TO OTHERS, OR USED IN CONNECTION WITH ANY WORK OR PROJECT OTHER THAN THE SPECIFIC PROJECT FOR WHICH THEY HAVE BEEN PREPARED AND DEVELOPED, WITHOUT THE WRITTEN CONSENT OF THE ARCHITECT. VISUAL CONTACT WITH THESE DRAWINGS OR SPECIFICATIONS SHALL CONSTITUTE CONCLUSIVE EVIDENCE OF ACCEPTANCE OF THESE RESTRICTIONS.

No.	Distribution/Revision	Date
	BID DOCUMENTS	7.7.2014

PSOMAS
3111 Camino Del Rio North, Suite 702
San Diego, CA 92108
(619) 981-2800 (619) 981-2392 fax
www.psomas.com

REGISTERED PROFESSIONAL ENGINEER
JAMES S. BLISS
No. 41792
Exp. 3-31-16
CIVIL
STATE OF CALIFORNIA

City of Torrance
Torrance Transit Park and Ride
Regional Terminal
465 Crenshaw Blvd.
Torrance, CA 90503

Torrance Transit Park and Ride Regional Terminal

CLIENT PROJECT #: 82013-15

Drawing Title

CIVIL GRADING/PAVING/UTILITY PLAN

Scale: 1" = 20' AS NOTED
IF DRAWING IS NOT 30"x42" THEN IT IS NOT TO SCALE

Location: LA
Project Manager: KF
Project No.: 13025
Date Plotted: 07/07/2014

Drawing No.
C-303

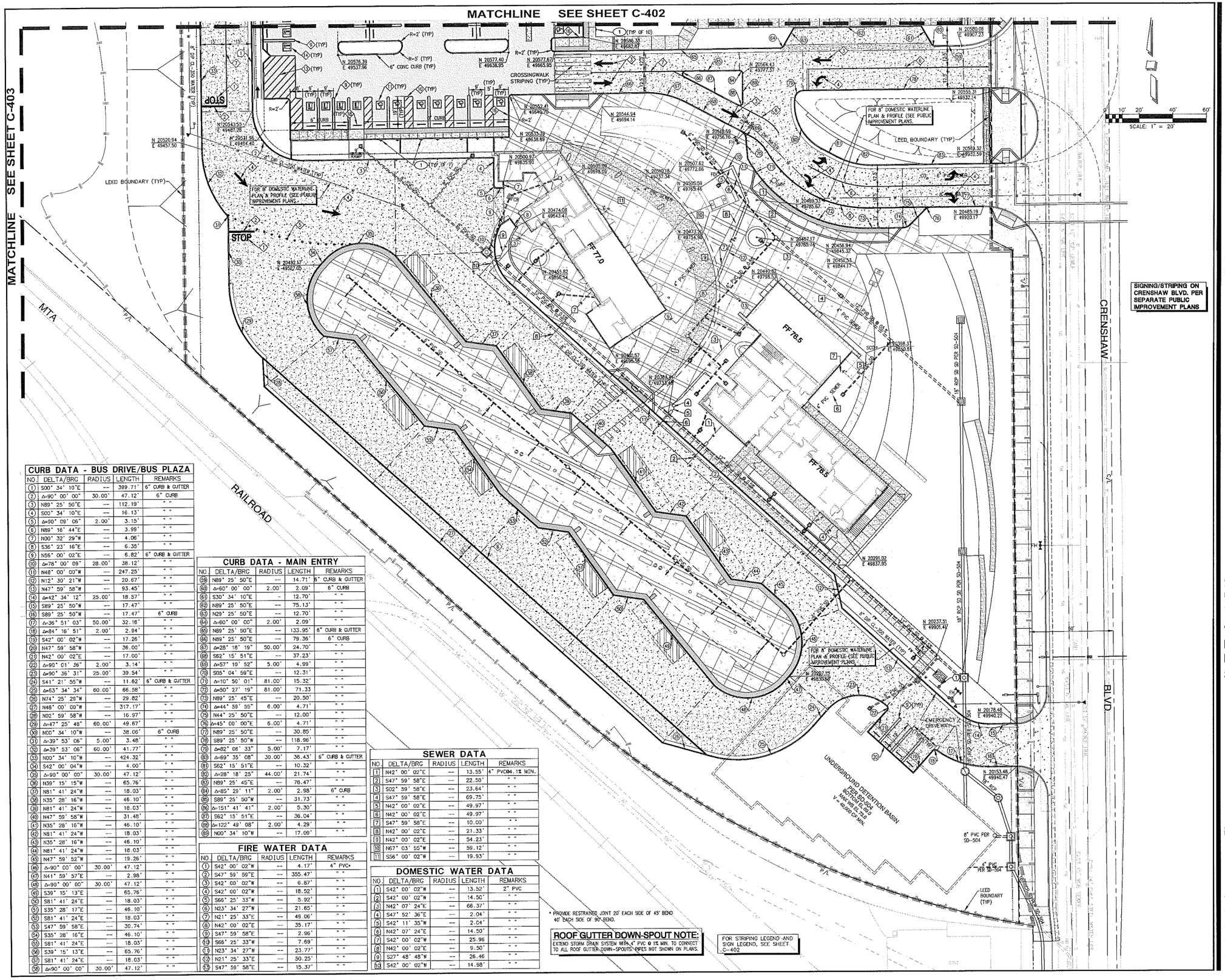

CURB DATA - BUS DRIVE/BUS PLAZA				
NO.	DELTA/BRG	RADIUS	LENGTH	REMARKS
1	S00° 34' 10"E	--	399.71'	6" CURB & GUTTER
2	Δ=90° 00' 00"	30.00'	47.12'	6" CURB
3	N89° 25' 50"E	--	112.19'	" "
4	S00° 34' 10"E	--	16.13'	" "
5	Δ=90° 09' 06"	2.00'	3.15'	" "
6	N89° 16' 44"E	--	3.99'	" "
7	N00° 32' 29"W	--	4.06'	" "
8	S36° 23' 16"E	--	6.35'	" "
9	N56° 00' 02"E	--	6.82'	6" CURB & GUTTER
10	Δ=78° 00' 09"	28.00'	38.12'	" "
11	N48° 00' 00"W	--	247.25'	" "
12	N12° 30' 21"W	--	20.67'	" "
13	N47° 59' 58"W	--	93.45'	" "
14	Δ=42° 34' 12"	25.00'	18.57'	" "
15	S89° 25' 50"W	--	17.47'	" "
16	S89° 25' 50"W	--	17.47'	6" CURB
17	Δ=36° 51' 03"	50.00'	32.16'	" "
18	Δ=84° 16' 51"	2.00'	2.94'	" "
19	S42° 00' 02"W	--	17.26'	" "
20	N47° 59' 58"W	--	36.00'	" "
21	N42° 00' 02"E	--	17.00'	" "
22	Δ=90° 01' 36"	2.00'	3.14'	" "
23	Δ=90° 35' 31"	25.00'	39.54'	" "
24	S41° 21' 55"W	--	11.62'	6" CURB & GUTTER
25	Δ=63° 34' 34"	60.00'	66.58'	" "
26	N74° 25' 29"W	--	29.82'	" "
27	N48° 00' 00"W	--	317.17'	" "
28	N02° 59' 58"W	--	16.97'	" "
29	Δ=47° 25' 48"	60.00'	49.67'	" "
30	N00° 34' 10"W	--	38.06'	6" CURB
31	Δ=39° 53' 06"	5.00'	3.48'	" "
32	Δ=39° 53' 06"	60.00'	41.77'	" "
33	N00° 34' 10"W	--	424.32'	" "
34	S42° 00' 04"W	--	4.00'	" "
35	Δ=90° 00' 00"	30.00'	47.12'	" "
36	N39° 15' 15"W	--	65.76'	" "
37	N81° 41' 24"W	--	18.03'	" "
38	N35° 28' 16"W	--	46.10'	" "
39	N81° 41' 24"W	--	18.03'	" "
40	N47° 59' 58"W	--	31.48'	" "
41	N35° 28' 16"W	--	46.10'	" "
42	N81° 41' 24"W	--	18.03'	" "
43	N35° 28' 16"W	--	46.10'	" "
44	N81° 41' 24"W	--	18.03'	" "
45	N47° 59' 52"W	--	19.26'	" "
46	Δ=90° 00' 00"	30.00'	47.12'	" "
47	N41° 59' 57"E	--	2.98'	" "
48	Δ=90° 00' 00"	30.00'	47.12'	" "
49	S39° 15' 13"E	--	65.76'	" "
50	S81° 41' 24"E	--	18.03'	" "
51	S35° 28' 17"E	--	46.10'	" "
52	S81° 41' 24"E	--	18.03'	" "
53	S47° 59' 58"E	--	30.74'	" "
54	S35° 28' 16"E	--	46.10'	" "
55	S81° 41' 24"E	--	18.03'	" "
56	S39° 15' 13"E	--	65.76'	" "
57	S81° 41' 24"E	--	18.03'	" "
58	Δ=90° 00' 00"	30.00'	47.12'	" "

CURB DATA - MAIN ENTRY				
NO.	DELTA/BRG	RADIUS	LENGTH	REMARKS
59	N89° 25' 50"E	--	14.71'	6" CURB & GUTTER
60	Δ=60° 00' 00"	2.00'	2.09'	6" CURB
61	S30° 34' 10"E	--	12.70'	" "
62	N89° 25' 50"E	--	75.13'	" "
63	N29° 25' 50"E	--	12.70'	" "
64	Δ=60° 00' 00"	2.00'	2.09'	" "
65	N89° 25' 50"E	--	133.95'	6" CURB & GUTTER
66	N89° 25' 50"E	--	79.36'	6" CURB
67	Δ=28° 18' 19"	50.00'	24.70'	" "
68	S62° 15' 51"E	--	37.23'	" "
69	Δ=57° 10' 52"	5.00'	4.99'	" "
70	S05° 04' 59"E	--	12.31'	" "
71	Δ=10° 50' 01"	81.00'	15.32'	" "
72	Δ=50° 27' 19"	81.00'	71.33	" "
73	N89° 25' 45"E	--	20.50'	" "
74	Δ=44° 59' 55"	6.00'	4.71'	" "
75	N44° 25' 50"E	--	12.00'	" "
76	Δ=45° 00' 00"E	6.00'	4.71'	" "
77	N89° 25' 50"E	--	30.85'	" "
78	S89° 25' 50"W	--	118.96'	" "
79	Δ=82° 08' 33"	5.00'	7.17'	" "
80	Δ=69° 35' 08"	30.00'	36.43'	6" CURB & GUTTER
81	S62° 15' 51"E	--	10.32'	" "
82	Δ=28° 18' 25"	44.00'	21.74'	" "
83	N89° 25' 45"E	--	78.47'	" "
84	Δ=85° 29' 11"	2.00'	2.98'	6" CURB
85	S89° 25' 50"W	--	31.73'	" "
86	Δ=151° 41' 41"	2.00'	5.30'	" "
87	S62° 15' 51"E	--	36.04'	" "
88	Δ=122° 49' 08"	2.00'	4.29'	" "
89	N00° 34' 10"W	--	17.09'	" "

FIRE WATER DATA				
NO.	DELTA/BRG	RADIUS	LENGTH	REMARKS
1	S42° 00' 02"W	--	4.17'	4" PVC*
2	S47° 59' 58"E	--	355.47'	" "
3	S42° 00' 02"W	--	6.87'	" "
4	S42° 00' 02"W	--	18.52'	" "
5	S65° 25' 33"W	--	5.92'	" "
6	N23° 34' 27"W	--	21.65'	" "
7	N21° 25' 33"E	--	49.06'	" "
8	N42° 00' 02"E	--	35.17'	" "
9	S47° 59' 58"E	--	2.96'	" "
10	S65° 25' 33"W	--	7.69'	" "
11	N23° 34' 27"W	--	23.77'	" "
12	N21° 25' 33"E	--	50.25'	" "
13	S47° 59' 58"E	--	15.37'	" "

SEWER DATA				
NO.	DELTA/BRG	RADIUS	LENGTH	REMARKS
1	N42° 00' 02"E	--	13.55'	4" PVC@4.1% MIN.
2	S47° 59' 58"E	--	22.50'	" "
3	S02° 59' 58"E	--	23.64'	" "
4	S47° 59' 58"E	--	69.75'	" "
5	N42° 00' 02"E	--	49.97'	" "
6	N42° 00' 02"E	--	49.97'	" "
7	S47° 59' 58"E	--	10.00'	" "
8	N42° 00' 02"E	--	21.33'	" "
9	N42° 00' 02"E	--	54.23'	" "
10	N67° 03' 55"W	--	59.12'	" "
11	S56° 00' 02"W	--	19.93'	" "

DOMESTIC WATER DATA				
NO.	DELTA/BRG	RADIUS	LENGTH	REMARKS
1	S42° 00' 02"W	--	13.52'	2" PVC
2	S42° 00' 02"W	--	14.50'	" "
3	N42° 07' 24"E	--	66.37'	" "
4	S47° 52' 36"E	--	2.04'	" "
5	S42° 11' 35"W	--	2.04'	" "
6	N42° 07' 24"E	--	14.50'	" "
7	S42° 00' 02"W	--	25.96	" "
8	N42° 00' 02"E	--	9.50'	" "
9	S27° 48' 48"W	--	26.46	" "
10	S42° 00' 02"W	--	14.98'	" "

* PROVIDE RESTRAINED JOINT 20' EACH SIDE OF 45° BEND 40' EACH SIDE OF 90°-BEND.

ROOF GUTTER DOWN-SPOUT NOTE:
EXTEND STORM DRAIN SYSTEM WITH 4" PVC @ 1% MIN. TO CONNECT TO ALL ROOF GUTTER DOWN-SPOUTS. PIPES NOT SHOWN ON PLANS.

FOR STRIPING LEGEND AND SIGN LEGEND, SEE SHEET C-402

FRANK R. WEBB ARCHITECTS
www.teamfwa.com Los Angeles | Fullerton
8607 Venice Boulevard Los Angeles, CA 90034
ph: 310.839.4717 fax: 310.839.9174

THESE DRAWINGS AND SPECIFICATIONS AND IDEAS, DESIGNS AND ARRANGEMENTS REPRESENTED THEREIN ARE AND SHALL REMAIN THE PROPERTY OF THE ARCHITECT. NO PART THEREOF SHALL BE COPIED, DISCLOSED TO OTHERS, OR USED IN CONNECTION WITH ANY WORK ON PROJECT OTHER THAN THE SPECIFIED PROJECT FOR WHICH THEY HAVE BEEN PREPARED AND DEVELOPED WITHOUT THE WRITTEN CONSENT OF THE ARCHITECT. VISITORS TO CONTACT WITH THESE DRAWINGS OR SPECIFICATIONS SHALL CONSTITUTE CONCLUSIVE EVIDENCE OF ACCEPTANCE OF THESE RESTRICTIONS.

No.	Distribution/Revision	Date
	BID DOCUMENTS	7.7.2014

PSOMAS
3111 Camino Del Rio North, Suite 702
San Diego, CA 92108
(619) 961-2800 (619) 961-2392 fax
www.psomas.com

REGISTERED PROFESSIONAL ENGINEER JAMES S. BLISSITT No. 41792 Exp. 3-31-16 CIVIL STATE OF CALIFORNIA

City of Torrance
Torrance Transit Park and Ride
Regional Terminal
465 Crenshaw Blvd.
Torrance, CA 90503

Torrance Transit Park and Ride Regional Terminal

CLIENT PROJECT #: 82013-15

Drawing Title

CIVIL HORIZONTAL CONTROL /SIGN/STRIPING PLAN

Scale: 1" = 20' AS NOTED
IF DRAWING IS NOT 30"x42" THEN IT IS NOT TO SCALE

Drawing No. C-401

Location: LA
Project Manager: KF
Project No.: 13025
Date Plotted: 07/07/2014

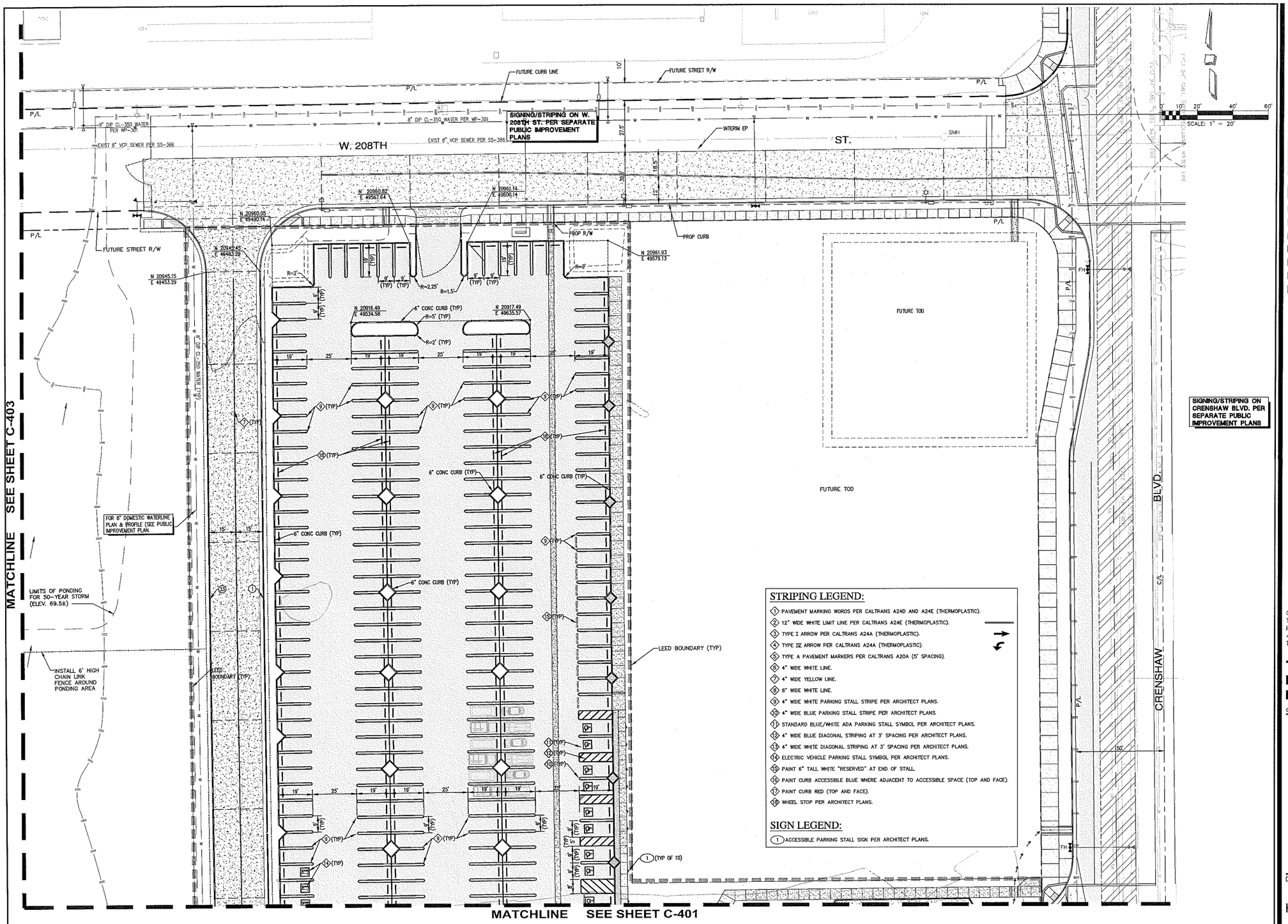

STRIPING LEGEND:

1. PAVEMENT MARKING WORDS PER CALTRANS A24D AND A24E (THERMOPLASTIC).
2. 12" WIDE WHITE LIMIT LINE PER CALTRANS A24E (THERMOPLASTIC).
3. TYPE I ARROW PER CALTRANS A24A (THERMOPLASTIC).
4. TYPE IX ARROW PER CALTRANS A24A (THERMOPLASTIC).
5. TYPE A PAVEMENT MARKERS PER CALTRANS A20A (5' SPACING).
6. 4" WIDE WHITE LINE.
7. 4" WIDE YELLOW LINE.
8. 8" WIDE WHITE LINE.
9. 4" WIDE WHITE PARKING STALL STRIPE PER ARCHITECT PLANS.
10. 4" WIDE BLUE PARKING STALL STRIPE PER ARCHITECT PLANS.
11. STANDARD BLUE/WHITE ADA PARKING STALL SYMBOL PER ARCHITECT PLANS.
12. 4" WIDE BLUE DIAGONAL STRIPING AT 3' SPACING PER ARCHITECT PLANS.
13. 4" WIDE WHITE DIAGONAL STRIPING AT 3' SPACING PER ARCHITECT PLANS.
14. ELECTRIC VEHICLE PARKING STALL SYMBOL PER ARCHITECT PLANS.
15. PAINT 6" TALL WHITE "RESERVED" AT END OF STALL.
16. PAINT CURB ACCESSIBLE BLUE WHERE ADJACENT TO ACCESSIBLE SPACE (TOP AND FACE).
17. PAINT CURB RED (TOP AND FACE).
18. WHEEL STOP PER ARCHITECT PLANS.

SIGN LEGEND:

1. ACCESSIBLE PARKING STALL SIGN PER ARCHITECT PLANS.

CURB DATA - BUS DRIVE/BUS PLAZA

NO.	DELTA/BRG	RADIUS	LENGTH	REMARKS
1	S00° 34' 10"E	—	399.71'	6" CURB & GUTTER
33	N00° 34' 10"W	—	424.32'	6" CURB

FRANK R. WEBB ARCHITECTS
www.frankrwebb.com Los Angeles | Fullerton

8807 Venice Boulevard Los Angeles, CA 90034
ph: 310.559.4717 fax: 310.559.9174

THESE DRAWINGS AND SPECIFICATIONS AND DETAIL DESIGNS AND ARRANGEMENTS REPRESENTED THEREBY ARE AND SHALL REMAIN THE PROPERTY OF THE ARCHITECT. NO PART THEREOF SHALL BE COPIED, DISCLOSED TO OTHERS, OR USED IN CONNECTION WITH ANY WORK ON PROJECT OTHER THAN THE SPECIFIED PROJECT FOR WHICH THEY HAVE BEEN PREPARED AND DEVELOPED WITHOUT THE WRITTEN CONSENT OF THE ARCHITECT. ANY USE IN CONFLICT WITH THESE DRAWINGS OR SPECIFICATIONS SHALL CONSTITUTE CONCLUSIVE EVIDENCE OF ACCEPTANCE OF THESE RESTRICTIONS.

No.	Distribution/Revision	Date
	BID DOCUMENTS	7.7.2014

PSOMAS
3111 Camino Del Rio North, Suite 702
San Diego, CA 92108
(619) 961-2800 (619) 961-2392 fax
www.psomas.com

REGISTERED PROFESSIONAL ENGINEER JAMES S. BLISS No. 41795 Exp. 3-31-16 CIVIL STATE OF CALIFORNIA

City of Torrance
Torrance Transit Park and Ride
Regional Terminal
465 Crenshaw Blvd.
Torrance, CA 90503

Torrance Transit Park and Ride Regional Terminal

CLIENT PROJECT #: 82013-15

Drawing Title

CIVIL HORIZONTAL CONTROL /SIGN/STRIPING PLAN

Scale: 1" = 20' AS NOTED
IF DRAWING IS NOT 30"x42" THEN IT IS NOT TO SCALE

Location: LA
Project Manager: KF
Project No.: 13025
Date Plotted: 07/07/2014

Drawing No.
C-402

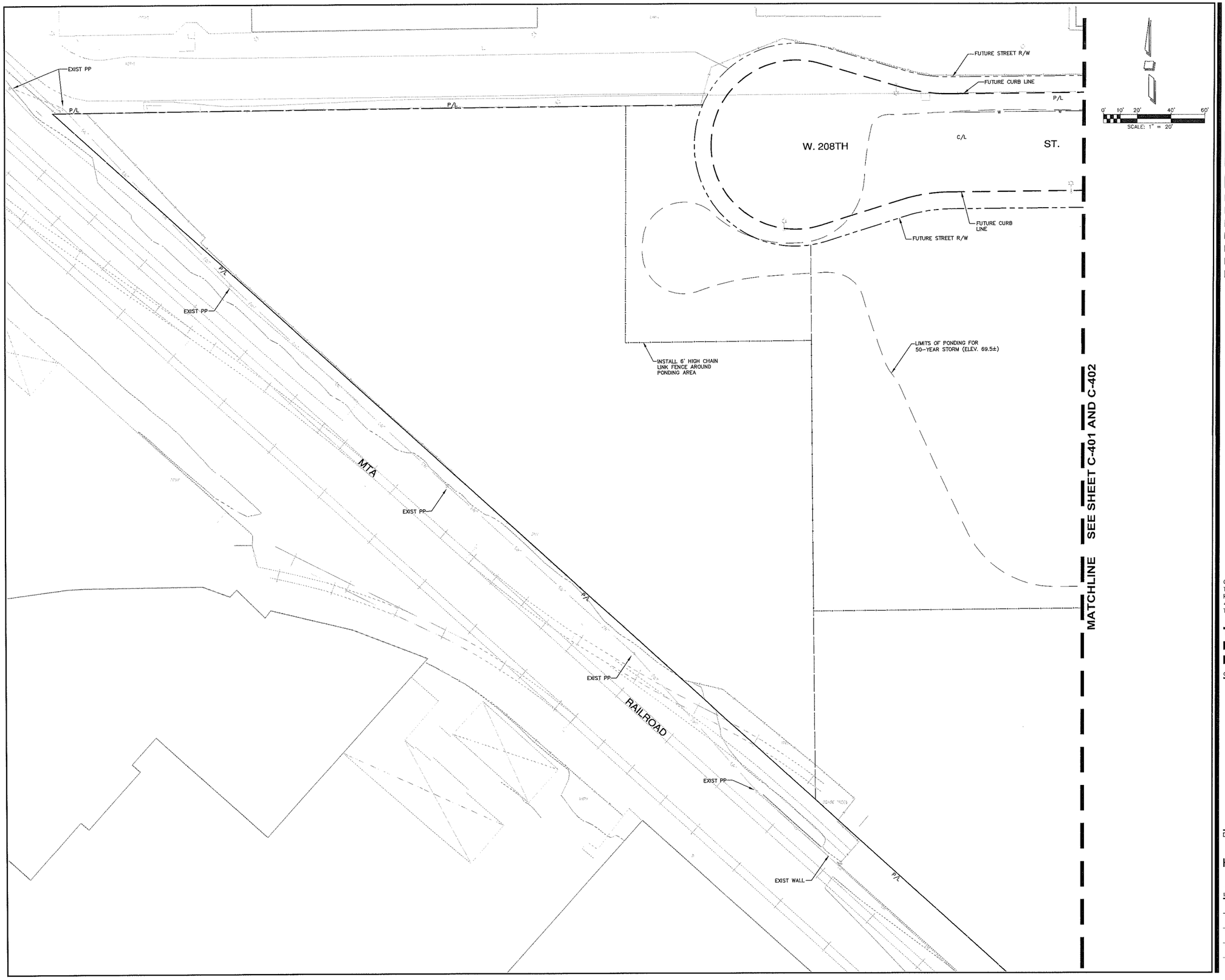

FRANK R. WEBB
ARCHITECTS
www.frankrwebb.com Los Angeles | Fullerton

5607 Venice Boulevard Los Angeles, CA 90034
ph: 310.839.4717 fax: 310.839.9174

THESE DRAWINGS AND SPECIFICATIONS AND IDEAS, DESIGNS AND ARRANGEMENTS REPRESENTED THEREBY ARE AND SHALL REMAIN THE PROPERTY OF THE ARCHITECT. NO PART THEREOF SHALL BE COPIED, DISCLOSED TO OTHERS, OR USED IN CONNECTION WITH ANY WORK OR PROJECT OTHER THAN THE SPECIFIED PROJECT FOR WHICH THEY HAVE BEEN PREPARED AND DEVELOPED WITHOUT THE WRITTEN CONSENT OF THE ARCHITECT. ANY USE CONFLICT WITH THESE DRAWINGS OR SPECIFICATIONS SHALL CONSTITUTE CONCLUSIVE EVIDENCE OF ACCEPTANCE OF THESE RESTRICTIONS.

No.	Distribution/Revision	Date
	BID DOCUMENTS	7.7.2014

PSOMAS
3111 Camino Del Rio North, Suite 702
San Diego, CA 92108
(619) 961-2800 (619) 961-2392 fax
www.psomas.com

REGISTERED PROFESSIONAL ENGINEER
JAMES S. BLISS
No. 41798
Exp. 3-31-16
CIVIL
STATE OF CALIFORNIA

A BALANCED CITY
TORRANCE
INDUSTRIAL • RESIDENTIAL • COMMERCIAL

City of Torrance
Torrance Transit Park and Ride
Regional Terminal
465 Crenshaw Blvd.
Torrance, CA 90503

Torrance Transit Park and Ride Regional Terminal

CLIENT PROJECT #: 82013-15

Drawing Title

CIVIL
HORIZONTAL CONTROL
/SIGN/STRIPING PLAN

Scale: 1" = 20' AS NOTED
IF DRAWING IS NOT 30"x42" THEN IT IS NOT TO SCALE

Location: LA
Project Manager: KF
Project No.: 13025
Date Plotted: 07/07/2014

Drawing No.
C-403

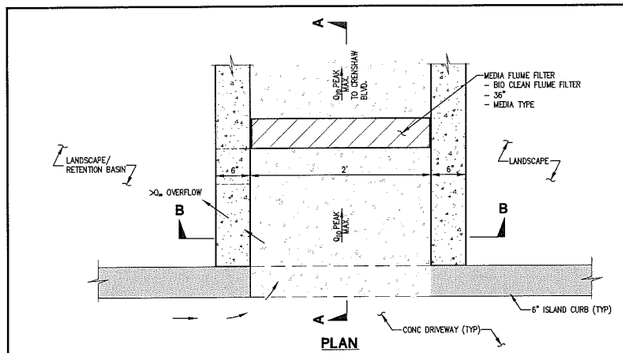

PLAN

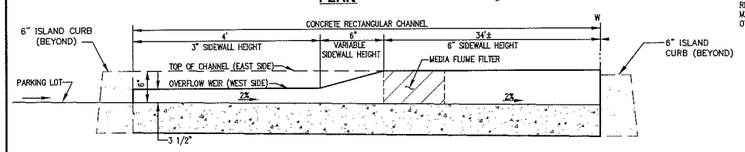

SECTION A-A

STORMWATER BMP / WEIR (11)
N.T.S.

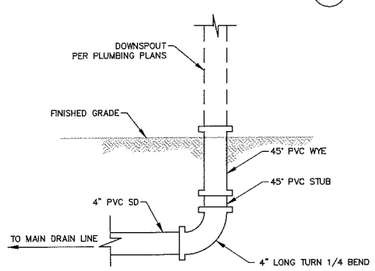

DOWNSPOUT CONNECTION (12)
N.T.S.

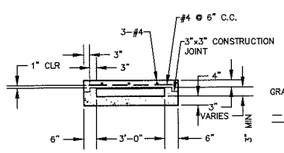

SECTION B-B

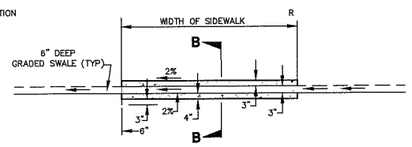

SECTION C-C

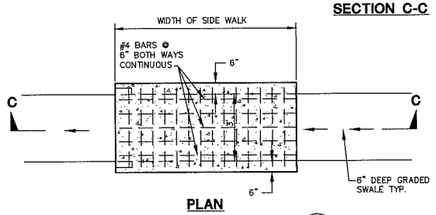

PLAN

SIDEWALK UNDERDRAIN (13)
N.T.S.

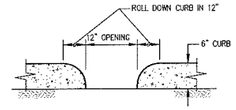

CURB OPENING (10)
N.T.S.

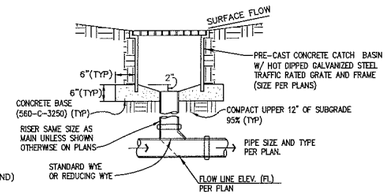

CONCRETE CATCH BASIN (9)
N.T.S.

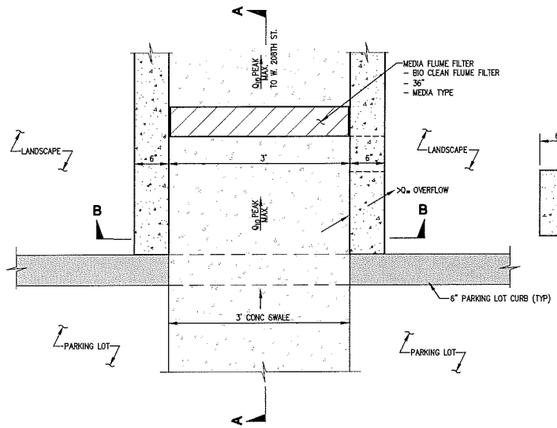

PLAN

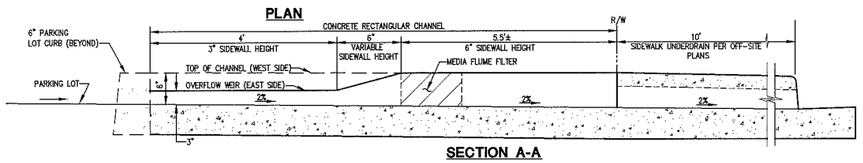

SECTION A-A

STORMWATER BMP / WEIR / OUTLET (8)
N.T.S.

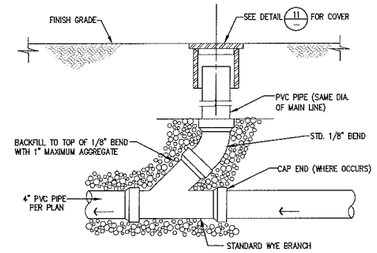

SEWER/STORM DRAIN CLEANOUT DETAIL (6)
N.T.S.

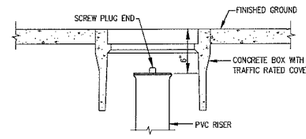

SEWER/STORM DRAIN CLEANOUT COVER (7)
N.T.S.

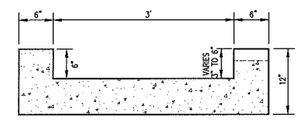

SECTION B-B

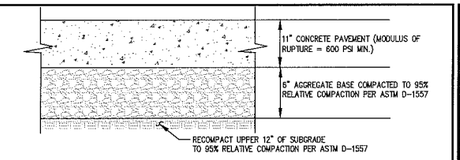

CONCRETE PAVEMENT (1)
N.T.S.

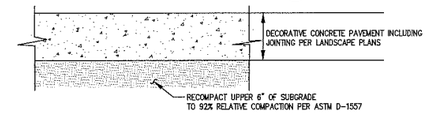

CONCRETE PEDESTRIAN PLAZA PAVEMENT (2)
N.T.S.

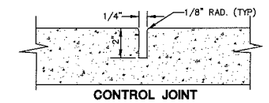

CONTROL JOINT

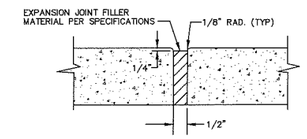

EXPANSION JOINT

NOTES:

1. PROVIDE EXPANSION JOINTS (EJ), ADJACENT TO CURBS, STRUCTURES, AND AT EXISTING PAVEMENT BEING JOINED.
2. PROVIDE CONTROL JOINTS (CJ) AT 5' MAX INTERVALS EACH WAY. COORDINATE WITH JOINTS ON LANDSCAPE PLANS.

CONCRETE BUS PAVEMENT JOINTS (3)
N.T.S.

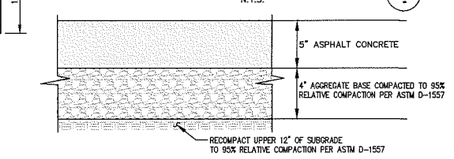

ASPHALT CONCRETE PAVEMENT (4)
N.T.S.

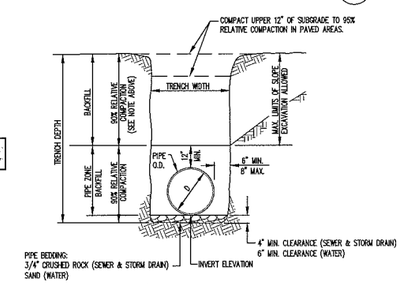

NOTE: PROVIDE 3' MIN COVER UNLESS OTHERWISE SHOWN ON PLANS.

PIPE BEDDING & TRENCH BACKFILL FOR PRIVATE SEWER, WATER & STORM DRAIN (5)
N.T.S.

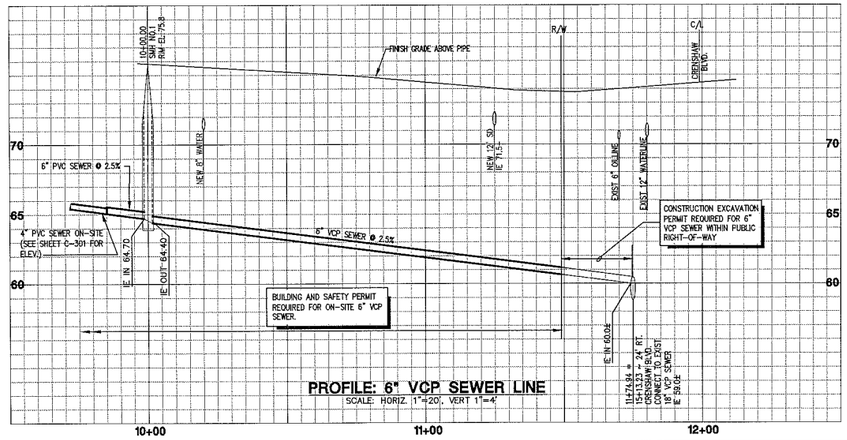

PROFILE: 6" VCP SEWER LINE
SCALE: HORIZ. 1"=20', VERT 1"=4'

FRANK R. WEBB ARCHITECTS
www.frankrwebb.com Los Angeles | Fullerton

8467 Venice Boulevard Los Angeles, CA 90034
ph: 310.559.4717 fax: 310.559.9174

THESE DRAWINGS AND SPECIFICATIONS AND IDEAS, DESIGNS AND ARRANGEMENTS REPRESENTED THEREBY ARE AND SHALL REMAIN THE PROPERTY OF THE ARCHITECT. NO PART THEREOF SHALL BE COPIED, DISCLOSED TO OTHERS, OR USED IN CONNECTION WITH ANY WORK OR PROJECT OTHER THAN THE SPECIFIED PROJECT FOR WHICH THEY HAVE BEEN PREPARED AND DEVELOPED WITHOUT THE WRITTEN CONSENT OF THE ARCHITECT. SUBMISSION OF THESE DRAWINGS OR SPECIFICATIONS SHALL CONSTITUTE CONCLUSIVE EVIDENCE OF ACCEPTANCE OF THESE RESTRICTIONS.

No.	Distribution/Revision	Date
	BID DOCUMENTS	7.7.2014

PSOMAS
3111 Camino Del Rio North, Suite 702
San Diego, CA 92108
(619) 961-2800 (619) 961-2392 fax
www.psomas.com

REGISTERED PROFESSIONAL ENGINEER JAMES S. BLISS No. 41795 Exp. 5-31-16 CIVIL STATE OF CALIFORNIA

City of Torrance
Torrance Transit Park and Ride
Regional Terminal
465 Crenshaw Blvd.
Torrance, CA 90503

Torrance Transit Park and Ride Regional Terminal

CLIENT PROJECT #: B2013-15

Drawing Title

CIVIL DETAILS/PROFILES

Scale: NONE AS NOTED
IF DRAWING IS NOT 30"x42" THEN IT IS NOT TO SCALE

Location: LA.
Project Manager: KF
Project No.: 13025
Date Plotted: 07/07/2014

Drawing No.

C-501

PLAN AND PROFILE OF STREET IMPROVEMENTS
FOR
208TH ST. WEST OF CRENSHAW BLVD. AND CRENSHAW BLVD. SOUTH OF 208TH ST.

GENERAL NOTES

1. ALL WORK SHALL BE DONE IN ACCORDANCE WITH THE STANDARD SPECIFICATIONS FOR PUBLIC WORKS CONSTRUCTION, LATEST EDITION AND SUPPLEMENTS THERETO, AS WRITTEN AND PROMULGATED BY PUBLIC WORKS STANDARDS, INC., HEREINAFTER REFERRED TO AS THE STANDARD SPECIFICATIONS, THE TORRANCE STANDARDS, AND TO THE SATISFACTION OF THE COMMUNITY DEVELOPMENT OR PUBLIC WORKS DIRECTOR.
2. IT SHALL BE THE RESPONSIBILITY OF THE CONTRACTOR TO LOCATE, VERIFY DEPTH AND PROTECT ALL STRUCTURES, INCLUDING SUBSTRUCTURES, SHOWN ON THE PLAN. THE CONTRACTOR SHALL BEAR THE ENTIRE COST OF REPAIRING OR REPLACING ANY OF SAID STRUCTURES DAMAGED BY HIM/HER DURING PROSECUTION OF THE WORK. ALL REPAIRS AND REPLACEMENTS SHALL BE DONE IN THE PRESENCE OF THE INSPECTOR. ALL LOCATIONS SHOWN ON THE PLAN FOR UTILITY LINES HAVE BEEN TAKEN FROM AVAILABLE RECORDS AND THEIR COMPLETENESS AND CORRECTNESS ARE IN NO WAY GUARANTEED.
3. THE CONTRACTOR SHALL NOTIFY UNDERGROUND SERVICE ALERT (USA) AT 1-800-227-2600 AND ALL PUBLIC UTILITY COMPANIES AND OWNERS OF PRIVATE FACILITIES WITHIN THE AREA OF CONSTRUCTION AT LEAST 2 WORKING DAYS IN ADVANCE OF PERFORMING ANY WORK WITHIN SAID AREA.
4. OVERHEAD UTILITY LINES CAUTION: REVIEW APPROVED CONSTRUCTION PLAN. IF CONSTRUCTION REQUIRES WORKERS AND/OR EQUIPMENT TO BE WITHIN 6 FEET OR CRANES OR HOISTING DEVICES TO BE WITHIN 10 FEET OF OVERHEAD ELECTRIC/UTILITY LINES, CALL SOUTHERN CALIFORNIA EDISON CO. AT 310-783-9339.
5. THE CONTRACTOR SHALL OBTAIN ALL NECESSARY PERMITS FROM THE CITY BEFORE COMMENCING WORK. TRAFFIC CONTROL WITHIN PUBLIC STREET RIGHTS OF WAY SHALL BE IN CONFORMANCE WITH THE "CITY OF TORRANCE TRAFFIC CONTROL STANDARDS" AND "CA MUTCD" LATEST EDITION. THE CONTRACTOR SHALL PROVIDE A 24-HOUR TELEPHONE NUMBER FOR EMERGENCY REPAIRS TO TRAFFIC CONTROL AND PAVEMENT MARKINGS.
6. PRIOR TO COMMENCEMENT OF WORK, ALL SURVEY MONUMENTS IN THE PROJECT AREA SHALL BE LOCATED AND TIED OUT. ALL CENTERLINE MONUMENTS OR TIES LOST OR DESTROYED BY THIS WORK SHALL BE REPLACED EITHER BY A LICENSED SURVEYOR OR A CIVIL ENGINEER REGISTERED PRIOR TO JANUARY 1, 1982 AND NEW TIE SHEETS PROVIDED. METHOD OF ESTABLISHMENT SHALL BE STATED ON THE TIE SHEET.
7. GRADE SHEETS PREPARED AND STAMPED BY A LICENSED ENGINEER OR SURVEYOR SHALL BE DELIVERED TO THE INSPECTOR PRIOR TO COMMENCEMENT OF WORK.
8. CRUSHED MISCELLANEOUS BASE (CMB) PER SECTION 200-2.4 OF THE STANDARD SPECIFICATIONS SHALL BE USED AS BASE MATERIAL UNDER SIDEWALK, CURBS, GUTTERS, CROSS GUTTERS, BUS PADS, DRIVEWAY APRONS AND PAVEMENT FOR ALL STREETS AND ALLEYS.
9. BASE FOR A RESIDENTIAL DRIVEWAY MAY BE OMITTED ON SANDY SOILS BE SHALL BE 4" THICK ON OTHER SOILS. SANDY SOILS SHALL BE DETERMINED BY A MINIMUM SE OF 30 PER SAND EQUIVALENT TEST AS PER CALIFORNIA TEST 217 OR ASTM D2419 AS CALLED FOR IN SECTION 200-2 OF THE STANDARD SPECIFICATION.
10. "X" DIMENSION SHOWN ON SPPWC STANDARD 110 SHALL BE 3 FEET UNLESS OTHERWISE CALLED FOR ON THE PLAN OR IN THE SPECIFICATIONS.
11. WHEN THERE IS MORE THAN ONE DRIVEWAY APRON ON THE SAME FRONTAGE OF A LOT, THE MINIMUM LENGTH OF FULL HEIGHT CURB BETWEEN THESE DRIVEWAY SHALL BE 20 FEET.
12. FOR A NEW ASPHALT CONCRETE (AC) SECTION BETWEEN 3" AND 4" THICK, THE CONTRACTOR SHALL CONSTRUCT ONE LIFT OF C2-AR400 (C2-PG-64-10) OVER BASE. FOR A NEW AC SECTION 5" THICK, THE CONTRACTOR SHALL CONSTRUCT ONE 2" THICK LIFT OF C2-AR400 (C2-PG-64-10) OVER ONE 3" THICK LIFT OF B-AR400 (B-PG-64-10) OVER BASE. FOR A NEW AC SECTION THICKER THAN 5" AND PAVEMENT OVERLAYS REFER TO CONSTRUCTION NOTES AND/OR PLANS. THE MAXIMUM THICKNESS OF EACH LIFT SHALL BE 4". INSTALLATION OF THE FINAL COURSE SHALL NOT TAKE PLACE UNTIL ALL UNDERGROUND UTILITY TRENCHING HAS BEEN COMPLETED AND APPROVAL TO PROCEED HAS BEEN GRANTED BY THE PUBLIC WORKS INSPECTOR OR ENGINEER.
13. DURING NON-CONSTRUCTION HOURS, ALL EXCAVATIONS MUST BE APPROPRIATELY SHORED AND PLATED OR BACKFILLED, EXCEPT BORE PITS WHICH SHALL BE SECURED WITH K-RAIL AND 6' HIGH CHAIN LINK FENCE PANELS SECURED IN PLACE TO THE SATISFACTION OF THE PUBLIC WORKS INSPECTOR OR ENGINEER. PLATES SHALL BE TACK WELDED, PINNED AND/OR SECURED IN PLACE BY ANOTHER METHOD APPROVED BY THE INSPECTOR OR ENGINEER.
14. THE CONTRACTOR SHALL NOTIFY THE PUBLIC WORKS DEPARTMENT AT 310-781-6900 PRIOR TO TRIMMING, REMOVING OR RELOCATING ANY EXISTING STREET TREES.
15. UNLESS OTHERWISE SHOWN, ALL TRAFFIC SIGNS SHALL BE RELOCATED OR REMOVED BY THE CONTRACTOR.
16. IF STREET TREES ARE REQUIRED IN THE PARKWAY, NEWLY INSTALLED TREES SHALL BE INSTALLED PER CITY OF TORRANCE STANDARD T401 AND TO THE SATISFACTION OF THE STREETSCAPE MANAGER. CONTACT THE PUBLIC WORKS DEPARTMENT AT 310-781-6900 FOR TYPE(S), SIZE(S) AND LOCATION(S) OF TREES.
17. PLANTED AND IRRIGATED PARKWAY(S) (IF REQUIRED) SHALL HAVE MATERIALS AND PLANTS APPROVED BY THE STREETSCAPE MANAGER PRIOR TO INSTALLATION.
18. THE CONTRACTOR SHALL MAKE AVAILABLE FOR THE INSPECTOR'S REVIEW, ON A DAILY BASIS, AS-BUILT DRAWINGS FOR WORK PERFORMED UP TO AND INCLUDING THE PREVIOUS DAY'S ACTIVITIES. WORK SHALL NOT BE CONSIDERED AS COMPLETE UNTIL AS-BUILT DRAWINGS ARE SUBMITTED TO AND ACCEPTED BY THE COMMUNITY DEVELOPMENT OR PUBLIC WORKS DIRECTOR.

CLAY SOIL NOTE

EXISTING CLAY SUBGRADE SHALL BE IMMEDIATELY COVERED AND KEPT MOIST FROM INITIAL EXCAVATION UNTIL PAVEMENT PLACEMENT IN ORDER TO ELIMINATE SOIL SHRINKAGE. PAVEMENT AND BASE TO BE PLACED ON FIRM UNYIELDING SUBGRADE. ADDITIONAL EXCAVATION MIGHT BE REQUIRED.

GEOTECHNICAL REPORT

A GEOTECHNICAL REPORT ENTITLED "GEOTECHNICAL SERVICES FOR ADVANCED CONCEPTUAL ENGINEERING, TORRANCE TRANSIT PARK & RIDE REGIONAL TERMINAL" PREPARED BY "DIAZ YOURMAN & ASSOCIATES" HAS BEEN PREPARED FOR THIS PROJECT AND IS AVAILABLE FOR REVIEW BY THE CONTRACTOR FOR REFERENCE AT THE OFFICE OF THE CITY ENGINEER.

WORK SHALL BE DONE ON THIS SITE UNTIL BELOW AGENCY IS NOTIFIED OF INTENTION TO GRADE OR EXCAVATE.

811

Know what's **below.**
Call before you dig.

TWO WORKING DAYS BEFORE YOU DIG

SURVEY MONUMENTS

CONTRACTOR SHALL BE RESPONSIBLE FOR ANY MONUMENTATION AND/OR BENCHMARKS THAT ARE DISTURBED OR DESTROYED BY CONSTRUCTION. SUCH POINTS SHALL BE REFERENCED AND REPLACED WITH APPROPRIATE MONUMENTATION BY A LICENSED LAND SURVEYOR OR REGISTERED ENGINEER AUTHORIZED TO PRACTICE LAND SURVEYING. A CORNER RECORD OF SURVEY AS APPROPRIATE, SHALL BE FILED BY THE LICENSED LAND SURVEYOR OR REGISTERED CIVIL ENGINEER AS REQUIRED BY THE LAND SURVEYOR'S ACT FOR ANY REPLACED MONUMENTATION.

BASIS OF BEARINGS

THE BEARING N00°23'03"W OF THE CENTERLINE OF CRENSHAW BOULEVARD, SHOWN AS N00°34'10"W ON RECORD OF SURVEY FILED IN BOOK 230, PAGE 47 OF RECORDS OF SURVEYS, RECORDS OF LOS ANGELES COUNTY, WAS TAKEN AS THE BASIS OF BEARINGS SHOWN ON THESE PLANS.

SOURCE OF TOPOGRAPHY

PHOTOGRAMMETRIC TOPOGRAPHY PROVIDED BY: PSOMAS
DATED: 09/10/2013

BENCHMARK

BENCH MARK: Y10874
DPW BM TAG IN E CB 1M(3.3FT) N/O BCR @ NE COR CRENSHAW BLVD & 208TH ST.
TORRANCE QUAD 2005 EL. 72.904
NOTE: ADD__' TO ELEVATIONS ON ST-647 TO MATCH ELEVATIONS SHOWN ON THIS PLAN.

ENGINEER'S NOTICE TO CONTRACTORS

THE EXISTENCE AND LOCATION OF ANY UNDERGROUND UTILITY PIPES OR STRUCTURES SHOWN ON THESE PLANS WERE OBTAINED BY A SEARCH OF AVAILABLE RECORDS. THESE LOCATIONS ARE APPROXIMATE AND SHALL BE CONFIRMED IN THE FIELD BY THE CONTRACTOR, SO THAT ANY NECESSARY ADJUSTMENT CAN BE MADE IN ALIGNMENT AND/OR GRADE OF THE PROPOSED IMPROVEMENT. THE CONTRACTOR IS REQUIRED TO TAKE DUE PRECAUTIONARY MEASURE TO PROTECT ANY UTILITY LINES SHOWN AND ANY OTHER LINES NOT OF RECORD OR NOT SHOWN ON THESE PLANS.

PRIVATE ENGINEERING NOTE

CONSTRUCTION CONTRACTOR AGREES THAT IN ACCORDANCE WITH GENERALLY ACCEPTED CONSTRUCTION PRACTICES, CONSTRUCTION CONTRACTOR WILL BE REQUIRED TO ASSUME SOLE AND COMPLETE RESPONSIBILITY FOR JOB SITE CONDITIONS DURING THE COURSE OF CONSTRUCTION OF THE PROJECT, INCLUDING SAFETY OF ALL PERSONS AND PROPERTY, THAT THIS REQUIREMENT SHALL BE MADE TO APPLY CONTINUOUSLY AND NOT TO BE LIMITED TO NORMAL WORKING HOURS, AND CONSTRUCTION CONTRACTOR FURTHER AGREES TO DEFEND, INDEMNIFY AND HOLD CITY AND DESIGN PROFESSIONAL HARMLESS FROM ANY AND ALL LIABILITY, REAL OR ALLEGED, IN CONNECTION WITH THE PERFORMANCE OF WORK ON THIS PROJECT, EXCEPTING LIABILITY ARISING FROM THE SOLE NEGLIGENCE OF THE CITY OR THE DESIGN PROFESSIONAL.

REFERENCES

ST-889, ST-647 AND ST-1066

ABBREVIATIONS

ALL ABBREVIATIONS ARE PER SECTION 1-3 OF THE GREEN BOOK WITH THE ADDITIONS INDICATED BELOW:

ABAND	ABANDONED	MAT'L	MATERIAL
ASS'Y	ASSEMBLY	MIN	MINIMUM
BFD	BACKFLOW DEVICE	MJ	MECHANICAL JOINT
BO	BLOW-OFF	N.I.C.	NOT A PART OF THIS CONTRACT
COMB	COMBINATION		
DG	DECOMPOSED GRANITE	PVC	POLYVINYL CHLORIDE
ELEV	ELEVATION	RSD	REGIONAL STANDARD DRAWINGS
EXIST.	EXISTING		
EJ	EXPANSION JOINT	RT	RIGHT
FLG/FLG'D	FLANGE/FLANGED	R/W	RIGHT-OF-WAY
FS	FINISHED SURFACE	SWR	SEWER
GV	GATE VALVE	TB	TOP OF BERM
HDPE	HIGH DENSITY POLYETHYLENE	TG	TOP OF GRATE
		TP	TOP OF PIPE
HP	HIGH PRESSURE	WTR	WATER
INT	INTERSECTION		
IE	INVERT ELEVATION		
IVT	IMPERIAL VALLEY TRANSIT		
LT	LEFT		

SWPPP NOTE

CONTRACTOR TO PROVIDE APPLICATION FOR GRADING PERMIT TO CITY PRIOR TO ANY SOIL DISTURBANCE. THE NOI MUST BE SUBMITTED TO CITY AT TIME OF GRADING PERMIT REQUEST. CONTRACTOR MUST MAINTAIN THE SERVICES OF A QUALIFIED SWPPP PRACTITIONER (QSP) DURING WORK OPERATIONS TO MONITOR OR THE WORK AND PROVIDE REQUIRED REPORTING INTO SMARTS.

EROSION CONTROL

THE CONTRACTOR IS RESPONSIBLE TO REPAIR ANY EROSION DAMAGE TO THE SLOPES, PADS OR STREETS SHOWN ON THESE PLANS WHETHER THE SLOPES ARE EXISTING OR NEW SLOPES, UNTIL THE PROJECT IS ACCEPTED BY THE CITY ENGINEER.

REGISTERED PROFESSIONAL ENGINEER JAMES S. BUSSEY No. 41789 Exp. 3-31-16 CIVIL STATE OF CALIFORNIA

LIST OF DRAWINGS

SHEET No.	DESCRIPTION
1	TITLE SHEET
2	SPECIAL NOTES, ABBREVIATIONS & TYPICAL SECTIONS
3	IMPROVEMENT PLAN – CRENSHAW BLVD.
4	IMPROVEMENT PLAN – CRENSHAW BLVD.
5	IMPROVEMENT PLAN – CRENSHAW BLVD.
6	IMPROVEMENT PLAN – W. 208TH ST.

SPECIAL NOTES

1. ALL OPERATIONS CONDUCTED ON THE PREMISES, INCLUDING THE WARMING UP, REPAIR, ARRIVAL, DEPARTURE, OR RUNNING OF TRUCKS, EARTHMOVING EQUIPMENT, CONSTRUCTION EQUIPMENT, AND ANY OTHER ASSOCIATED EQUIPMENT SHALL BE LIMITED TO THE PERIOD BETWEEN 8:00 AM AND 7:00 PM EACH DAY, MONDAY THROUGH FRIDAY, AND NO GRADING OR EARTHMOVING OPERATIONS SHALL BE CONDUCTED ON THE PREMISES ON SATURDAYS, SUNDAYS OR CITY OF TORRANCE HOLIDAYS WITHOUT APPROVAL BY THE CITY ENGINEER. OVERTIME INSPECTIONS SHALL BE AT THE CONTRACTORS EXPENSE.
2. THE CONTRACTOR SHALL TAKE ALL PRECAUTIONARY MEASURES TO PROTECT EXISTING IMPROVEMENTS AND THE CITY OF TORRANCE WILL ENFORCE SECTION 7-9 OF THE STANDARD SPECIFICATIONS FOR PUBLIC WORKS CONSTRUCTION.
3. ALL EXISTING IMPROVEMENTS INCLUDING A.C. BERM, A.C. OR P.C.C. PAVING, WHICH ARE BEING JOINED OR MATCHED IN CONNECTION WITH THIS PROJECT SHALL BE JOINED OR MATCHED IN A MANNER SATISFACTORY TO THE CITY ENGINEER INCLUDING NECESSARY SAWCUTTING, REMOVAL, REPLACEMENT AND CAPPING.
4. THE CONTRACTOR SHALL DESIGN, PLACE AND MAINTAIN ALL SAFETY DEVICES INCLUDING SHORING AND BARRICADING, AND SHALL BE SOLELY RESPONSIBLE FOR CONFORMING TO ALL LOCAL, STATE AND FEDERAL SAFETY AND HEALTH STANDARDS, LAWS AND REGULATIONS. THE CONTRACTOR IS REFERRED TO SECTION 7-10 "PUBLIC CONVENIENCE AND SAFETY" OF THE STANDARD SPECIFICATIONS FOR PUBLIC WORKS CONSTRUCTION.
5. ANY CONTRACTOR PERFORMING WORK ON THE PROJECT SITE SHALL FAMILIARIZE SELF WITH THE SITE AND SHALL BE SOLELY RESPONSIBLE FOR ANY DAMAGE TO EXISTING FACILITIES RESULTING DIRECTLY OR INDIRECTLY FROM OPERATIONS. THE CONTRACTOR IS REFERRED TO SECTION 7-9 "PROTECTION AND RESTORATION OF EXISTING IMPROVEMENTS" OF THE STANDARD SPECIFICATIONS FOR PUBLIC WORKS CONSTRUCTION.
6. ACCESS FOR FIRE AND OTHER EMERGENCY VEHICLES SHALL BE MAINTAINED AT ALL TIMES DURING PROJECT CONSTRUCTION.
7. THE CONTRACTOR SHALL MAINTAIN ADEQUATE DUST CONTROL MEASURES THROUGHOUT THE DURATION OF PROJECT CONSTRUCTION. PROJECT SITE MAINTENANCE SHALL CONFORM TO SECTION 7-8 "PROJECT SITE MAINTENANCE" OF THE STANDARD SPECIFICATIONS FOR PUBLIC WORKS CONSTRUCTION.
8. ALL DISTANCES AND DIMENSIONS SHOWN ON THE PLANS ARE IN A HORIZONTAL PLANE UNLESS OTHERWISE NOTED.
9. THE CONTRACTOR SHALL BE RESPONSIBLE FOR THE REPLACEMENT OF ANY PAVEMENT STRIPING OR MARKINGS REMOVED OR MADE ILLEGIBLE AS A RESULT OF HIS WORK.
10. APPROVAL OF THESE PLANS AS SHOWN DOES NOT CONSTITUTE APPROVAL OF ANY CONSTRUCTION OUTSIDE THE PROJECT LIMITS OF WORK.
11. LOCATION AND ELEVATION OF IMPROVEMENTS SHALL BE CONFIRMED BY FIELD MEASUREMENTS PRIOR TO CONSTRUCTION. THE CONTRACTOR SHALL MAKE EXPLORATORY EXCAVATIONS AND LOCATE EXISTING UNDERGROUND FACILITIES SUFFICIENTLY AHEAD OF CONSTRUCTION TO PERMIT REVISIONS TO PLANS IF NECESSARY BECAUSE OF DISCREPANCIES.
12. NEITHER THE OWNER, NOR THE ENGINEER OF WORK, WILL ENFORCE SAFETY MEASURES OR REGULATIONS. THE CONTRACTOR SHALL DESIGN, CONSTRUCT, AND MAINTAIN ALL SAFETY DEVICES, INCLUDING SHORING, AND SHALL BE SOLELY RESPONSIBLE FOR CONFORMING TO ALL LOCAL, STATE, AND FEDERAL SAFETY AND HEALTH STANDARDS, LAWS, AND REGULATIONS.
13. THE CONTRACTOR AGREES TO ASSUME SOLE AND COMPLETE RESPONSIBILITY FOR JOB SITE CONDITIONS DURING THE COURSE OF CONSTRUCTION OF THIS PROJECT, INCLUDING SAFETY OF ALL PERSONS AND PROPERTY; THAT THIS REQUIREMENT SHALL APPLY CONTINUOUSLY AND NOT BE LIMITED TO NORMAL WORKING HOURS; AND THAT THE CONTRACTOR SHALL DEFEND, INDEMNIFY, AND HOLD THE OWNER AND THE ENGINEER HARMLESS FROM ANY AND ALL LIABILITY, REAL OR ALLEGED, IN CONNECTION WITH THE PERFORMANCE OF WORK ON THIS PROJECT, EXCEPTING FOR LIABILITY ARISING FROM THE SOLE NEGLIGENCE OF THE OWNER OR THE ENGINEER.
14. THE ENGINEER OF WORK SHALL NOT BE RESPONSIBLE FOR THE CONTRACTOR'S FAILURE TO CARRY OUT THE CONSTRUCTION WORK IN ACCORDANCE WITH THE CONTRACT DOCUMENTS, NOR SHALL HE BE REQUIRED TO SUPERVISE THE CONDUCT OF THE WORK OR THE CONSTRUCTION PROCEDURES FOLLOWED BY THE CONTRACTOR OR SUBCONTRACTORS OR THEIR RESPECTIVE EMPLOYEES OR BY ANY OTHER PERSON AT THE JOB SITE OTHER THAN THAT OF THE ENGINEER'S EMPLOYEES.

WORK TO BE DONE

THE IMPROVEMENTS CONSIST OF THE FOLLOWING WORK TO BE DONE ACCORDING TO THESE PLANS AND THE SPECIFICATIONS AND STANDARD DRAWINGS LISTED BELOW.

STANDARD SPECIFICATIONS

1) STANDARD SPECIFICATIONS FOR PUBLIC WORKS CONSTRUCTION (SSPWC), LATEST EDITION.
2) CALIFORNIA DEPARTMENT OF TRANSPORTATION, "MANUAL OF TRAFFIC CONTROLS FOR CONSTRUCTION AND MAINTENANCE WORK ZONES" (MAY 19, 2004)

STANDARD DRAWINGS

CITY OF TORRANCE STANDARD DRAWINGS (LATEST EDITION)

STANDARD PLANS FOR PUBLIC WORKS CONSTRUCTION (SPPWC), LATEST EDITION.

LEGEND

EXISTING CONDITIONS

ITEM	SYMBOL
EXISTING SEWER LINE	S EXIST SIZE & MAT'L
EXISTING SEWER CLEANOUT	○
EXISTING SEWER MANHOLE	SMH OR SMH
EXISTING WATER LINE	W EXIST SIZE & MAT'L
EXISTING WATER METER	WM
EXISTING WATER VALVE	⊗
EXISTING FIRE HYDRANT	FH
EXISTING STORM DRAIN LINE	SD EXIST SIZE & MAT'L
EXISTING STORM DRAIN INLET	DI
EXISTING POWER POLE	(U/G) OR (O/H)
EXISTING ELECTRIC OR UNDERGROUND	E
EXISTING STREET LIGHT	
EXISTING GAS LINE	G EXIST SIZE
EXISTING TELEPHONE LINE	T
EXISTING TELEPHONE PEDESTAL	□
EXISTING CABLE TV LINE	CATV
EXISTING PULL BOX	□
EXISTING SIGN	
EXISTING TREE/BUSH	
EXISTING BOLLARD	⊙
EXISTING FENCE	

NEW IMPROVEMENTS

DESCRIPTION	STD DWG NO./DETAIL NO.	SYMBOL
8" CURB & GUTTER	MODIFIED SPPWC 120 & CITY OF TORRANCE STD T103	
CURB RAMP	SPPWC 111 (SIMILAR)	
SIDEWALK	T 103	
CONCRETE PAVEMENT		1/2 2/2 3/2 4/2
ASPHALT CONCRETE PAVEMENT		5/2
LANDSCAPE AREA		
6" VCP SEWER LATERAL	T 204, T 116	S
SEWER MANHOLE	SPPWC 200-3, T 116	S
CROSS GUTTER	SPPWC STD. 122	
RADIUS DRIVEWAY	T 105	
PARKWAY DRAIN	SPPWC STD 151	
CURB & GUTTER-MOUNTABLE	SPPWC STD 121	
TAPER	SPPWC STD 140	N/A

T = CITY OF TORRANCE STANDARD PLAN
SPPWC = STANDARD PLANS FOR PUBLIC WORKS CONSTRUCTION

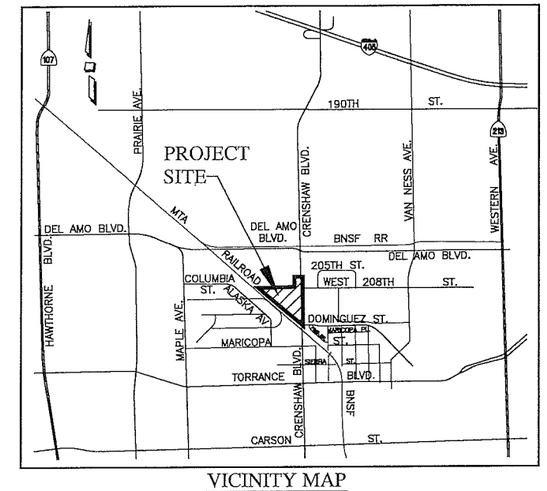

VICINITY MAP
N.T.S.

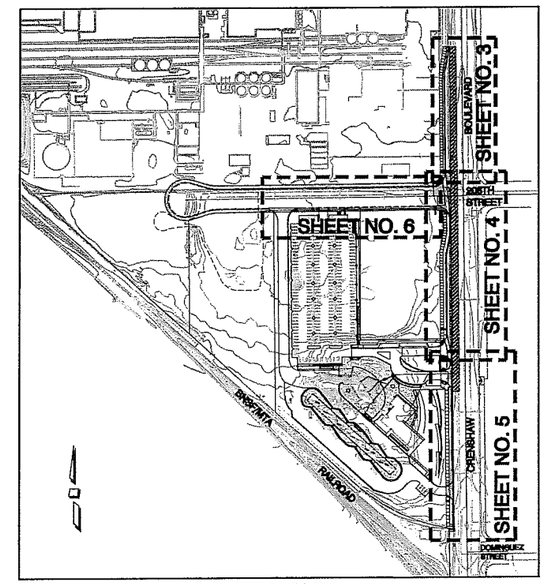

KEY MAP
SCALE: 1=200'

PRELIMINARY DRAWING
NOT FOR CONSTRUCTION

TITLE SHEET

PLAN AND PROFILE OF STREET IMPROVEMENTS FOR 208TH ST. WEST OF CRENSHAW BLVD. AND CRENSHAW BLVD. SOUTH OF 208TH ST.

PSOMAS
3111 Camino Del Rio North, Suite 702
San Diego, CA 92108
(619) 961-2800 (619) 961-2392 fax
www.psomas.com

REV.	DATE	DESCRIPTION	BY	CHECKED

CITY OF TORRANCE
COMMUNITY DEVELOPMENT DEPARTMENT

DRAWN: PRIVATE ENGINEER
DESIGNED: PRIVATE ENGINEER
PROJECT ENGINEER:
APPROVED:
RECOMMENDED:
JEFFERY GIBSON DATE
COMMUNITY DEVELOPMENT DIRECTOR
BUILDING REGULATION ADMINISTRATOR
FELIPE SEGOVIA
R.C.E. NO. 41102 (EXP.03/31/2017)
SCALE: AS SHOWN SHEET 1 OF 6
PLAN NO. **ST-1067**

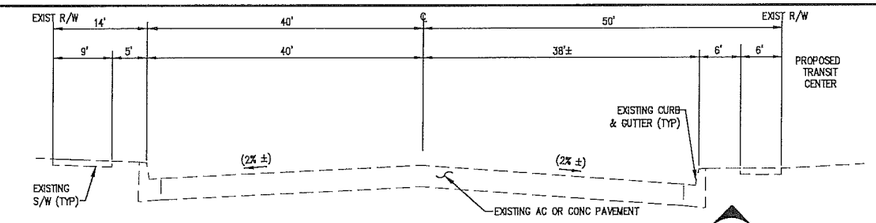

EXISTING CONDITIONS - CRENSHAW BLVD. (LOOKING SOUTH) A
NOT TO SCALE

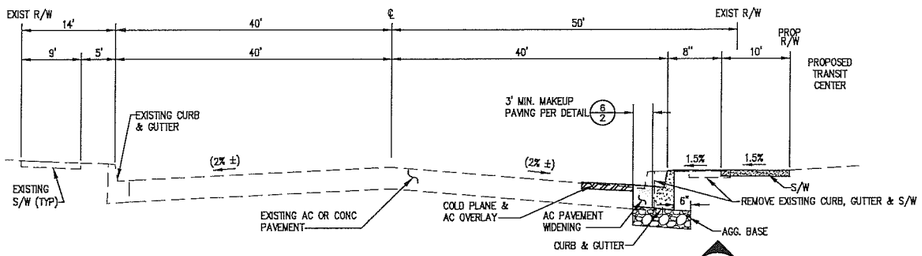

PROPOSED SECTION - CRENSHAW BLVD. 144+82.64 TO 145+25.87 B
NOT TO SCALE

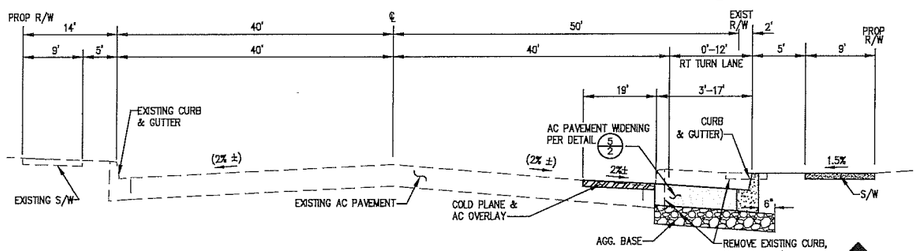

PROPOSED SECTION (AT RT TURN LANE) - CRENSHAW BLVD. 139+89.49 TO 143+55.26 C-1
NOT TO SCALE

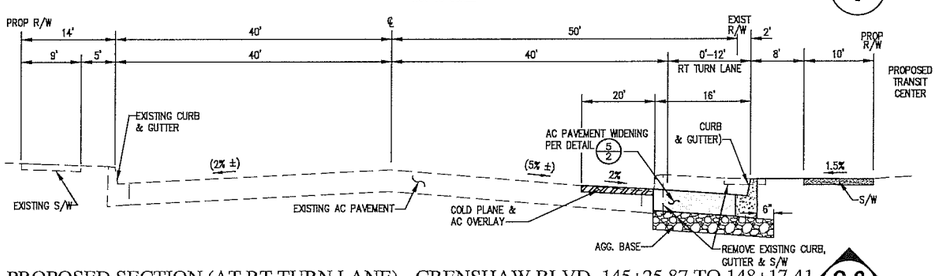

PROPOSED SECTION (AT RT TURN LANE) - CRENSHAW BLVD. 145+25.87 TO 148+17.41 C-2
NOT TO SCALE

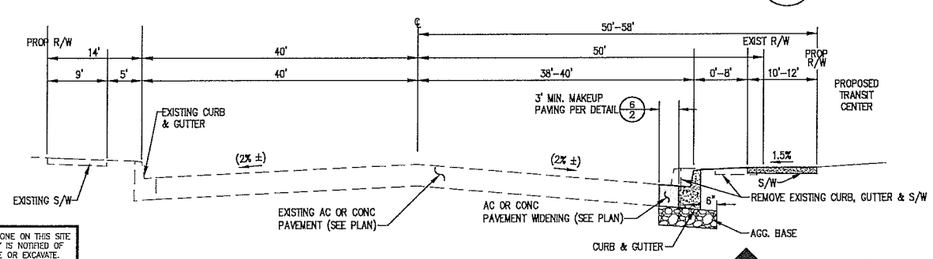

PROPOSED SECTION - CRENSHAW BLVD. 149+82.41 TO 153+83.48 D
NOT TO SCALE

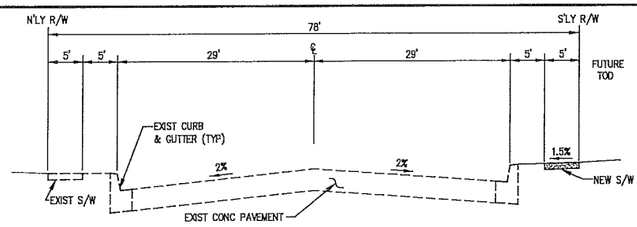

PROPOSED CONDITIONS - 208TH ST. EXTENSION 9+55.00 TO 14+47.29 E
NOT TO SCALE

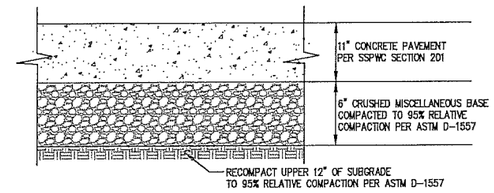

CONCRETE PAVEMENT 1
N.T.S.

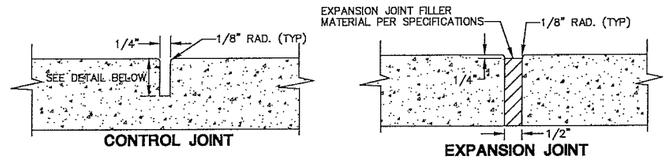

NOTES:

1. PROVIDE EXPANSION JOINTS (EJ) AS SHOWN ON PLANS AND ADJACENT TO CURBS, STRUCTURES, AND AT EXISTING PAVEMENT BEING JOINED.
2. PROVIDE CONTROL JOINTS (CJ) AT 5' MAX INTERVALS EACH WAY.

CONCRETE PAVEMENT JOINTS 2
N.T.S.

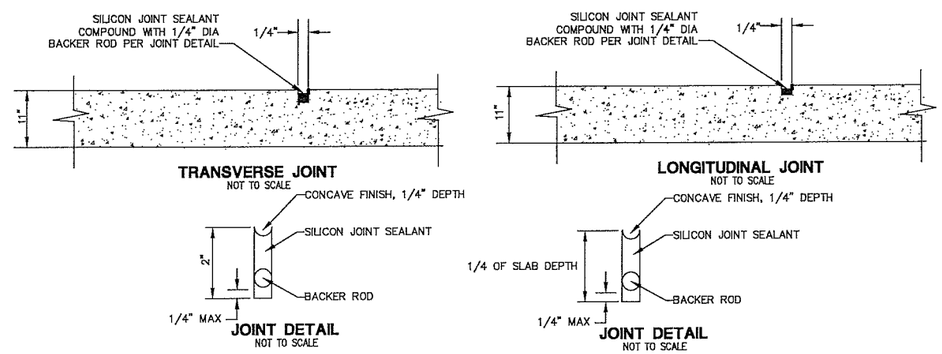

CONTROL JOINT DETAILS 3
N.T.S.

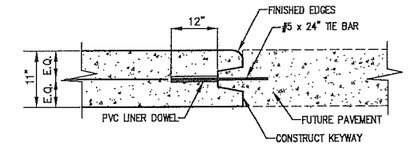

CONTACT JOINT WITH KEYWAY AND DOWEL 4
N.T.S.

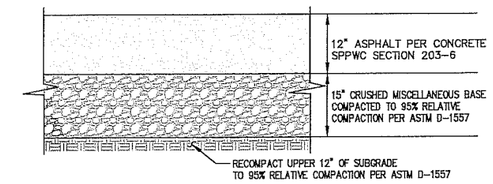

ASPHALT CONCRETE PAVEMENT 5
N.T.S.

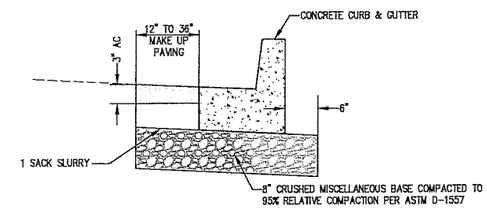

MAKE UP PAVING DETAIL 6
N.T.S.

WORK SHALL BE DONE ON THIS SITE UNTIL BELOW AGENCY IS NOTIFIED OF INTENTION TO GRADE OR EXCAVATE.

811

Know what's below.
Call before you dig.

TWO WORKING DAYS BEFORE YOU DIG

SPECIAL NOTES, ABBREVIATIONS & TYPICAL SECTIONS

PLAN AND PROFILE OF STREET IMPROVEMENTS FOR 208TH ST. WEST OF CRENSHAW BLVD. AND CRENSHAW BLVD. SOUTH OF 208TH ST.

PSOMAS
3111 Camino Del Rio North, Suite 702
San Diego, CA 92108
(619) 961-2800 (619) 961-2392 fax
www.psomas.com

REGISTERED PROFESSIONAL ENGINEER JAMES S. BUSS No. 41799 Exp. 3-31-16 CIVIL STATE OF CALIFORNIA

REV.	DATE	DESCRIPTION	BY	CHECKED

CITY OF TORRANCE
COMMUNITY DEVELOPMENT DEPARTMENT

DRAWN: PRIVATE ENGINEER
DESIGNED: PRIVATE ENGINEER
PROJECT ENGINEER:
APPROVED:
BUILDING REGULATION ADMINISTRATOR
FELIPE SEGOVIA
R.C.E. NO. 41102 (EXP.03/31/2017)

RECOMMENDED:
JEFFERY GIBSON DATE
COMMUNITY DEVELOPMENT DIRECTOR

SCALE: AS SHOWN SHEET 2 OF 6

PLAN NO. **ST-1067**

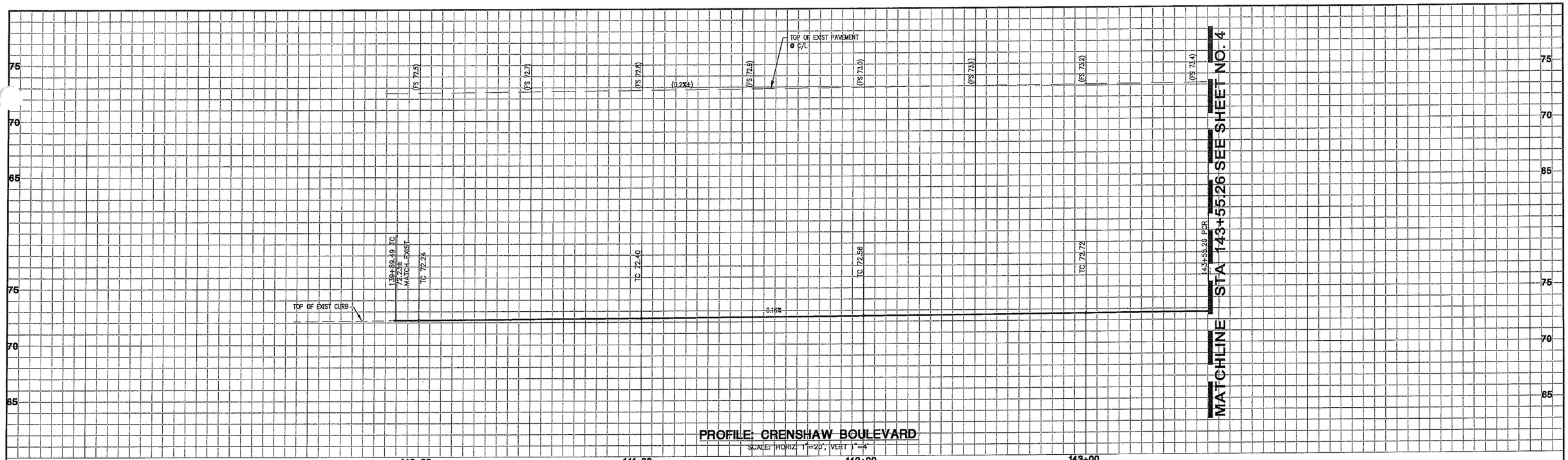

PROFILE: CRENSHAW BOULEVARD

SCALE: HORIZ. 1"=20', VERT 1"=4'

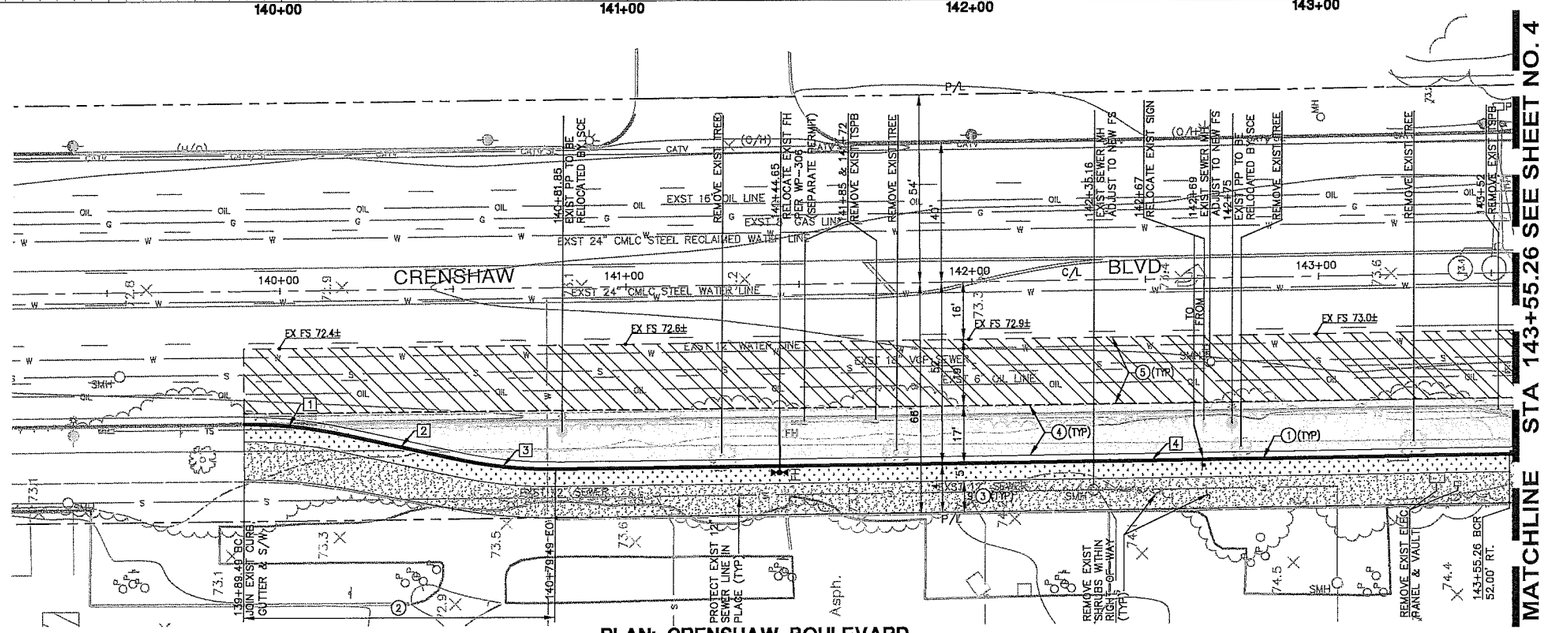

PLAN: CRENSHAW BOULEVARD

SCALE: HORIZ. 1"=20

CONSTRUCTION NOTES:

1. INSTALL MODIFIED 8" CURB & 24" GUTTER AS PER SPPWC 120(8) & TORRANCE STD T103.
2. CONSTRUCT TAPER PER SPPWC STD 140 (L=90').
3. CONSTRUCT 9' WIDE SIDEWALK PER TORRANCE STD T103, SIM.
4. CONSTRUCT AC PAVEMENT PER (5/2)
5. GRIND & OVERLAY 1 1/2" MIN. THICKNESS AC.

CURB DATA

NO.	DELTA/BRG	RADIUS	LENGTH	REMARKS
1	(SEE SPPWC STD 140)			8" CURB & GUTTER
2	(SEE SPPWC STD 140)			" "
3	(SEE SPPWC STD 140)			" "
4	N00°34'10"W	—	275.25'	8" CURB & GUTTER

0' 10' 20' 40' 60'
SCALE: 1" = 20'

WORK SHALL BE DONE ON THIS SITE UNTIL BELOW AGENCY IS NOTIFIED OF INTENTION TO GRADE OR EXCAVATE.

811 Know what's below. Call before you dig.

TWO WORKING DAYS BEFORE YOU DIG

REGISTERED PROFESSIONAL ENGINEER JAMES S. BLISS No. 41793 Exp. 3-31-16 CIVIL STATE OF CALIFORNIA

IMPROVEMENT PLAN - CRENSHAW BOULEVARD

PLAN AND PROFILE OF STREET IMPROVEMENTS FOR 208TH ST. WEST OF CRENSHAW BLVD. AND CRENSHAW BLVD. SOUTH OF 208TH ST.

PSOMAS
3111 Camino Del Rio North, Suite 702
San Diego, CA 92108
(619) 961-2800 (619) 961-2392 fax
www.psomas.com

REV.	DATE	DESCRIPTION	BY	CHECKED

CITY OF TORRANCE
COMMUNITY DEVELOPMENT DEPARTMENT

DRAWN: PRIVATE ENGINEER
DESIGNED: PRIVATE ENGINEER
PROJECT ENGINEER:
APPROVED:
BUILDING REGULATION ADMINISTRATOR FELIPE SEGOVIA R.C.E. NO. 41102 (EXP.03/31/2017)

RECOMMENDED:
JEFFERY GIBSON DATE
COMMUNITY DEVELOPMENT DIRECTOR

SCALE: AS SHOWN SHEET 3 OF 6

PLAN NO. **ST-1067**

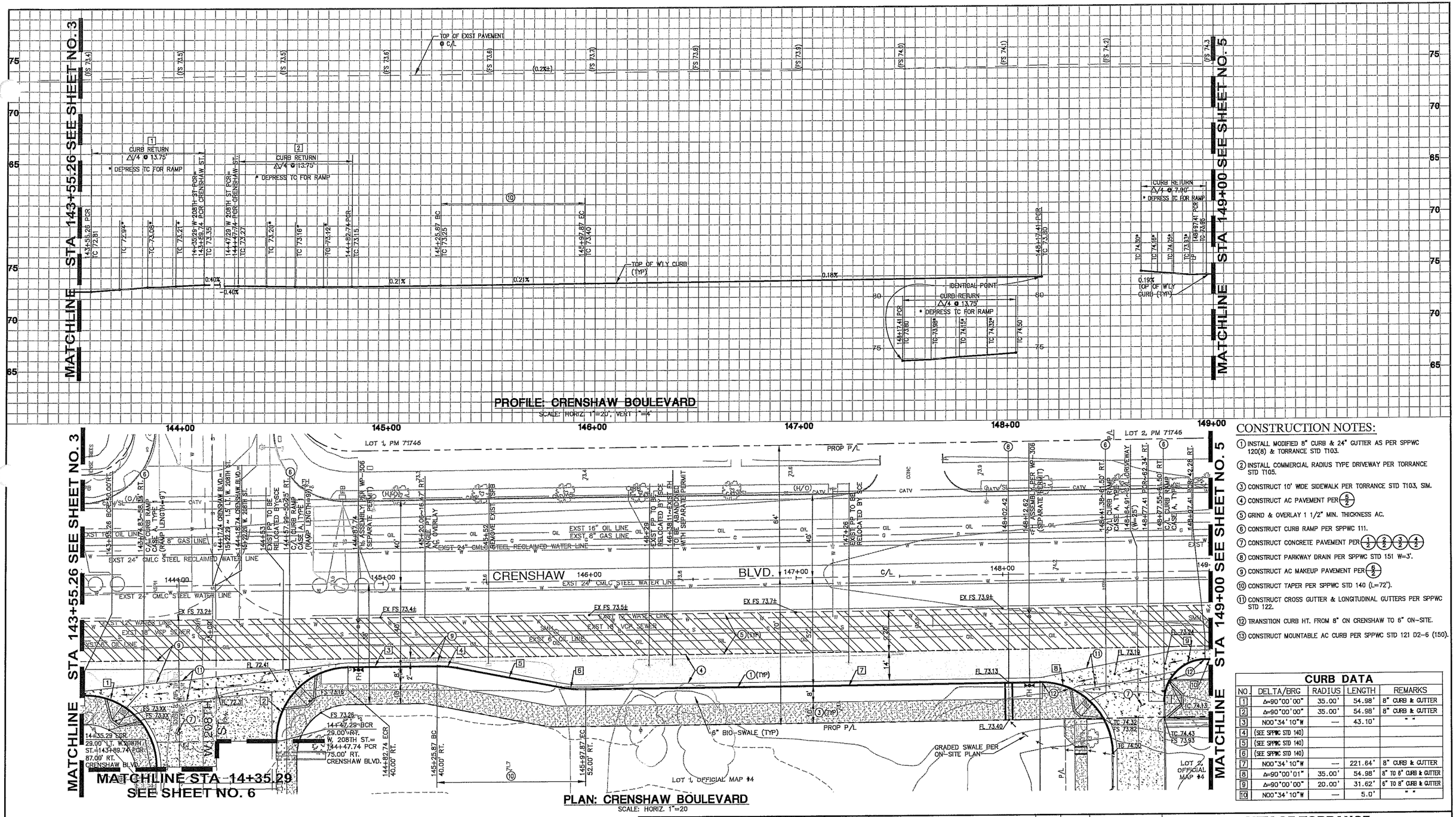

CONSTRUCTION NOTES:

1. INSTALL MODIFIED 8" CURB & 24" GUTTER AS PER SPPWC 120(8) & TORRANCE STD T103.
2. INSTALL COMMERCIAL RADIUS TYPE DRIVEWAY PER TORRANCE STD T105.
3. CONSTRUCT 10' WIDE SIDEWALK PER TORRANCE STD T103, SIM.
4. CONSTRUCT AC PAVEMENT PER (5/2)
5. GRIND & OVERLAY 1 1/2" MIN. THICKNESS AC.
6. CONSTRUCT CURB RAMP PER SPPWC 111.
7. CONSTRUCT CONCRETE PAVEMENT PER (1/2)(2/2)(3/2)(4/2)
8. CONSTRUCT PARKWAY DRAIN PER SPPWC STD 151 W=3'.
9. CONSTRUCT AC MAKEUP PAVEMENT PER (6/2)
10. CONSTRUCT TAPER PER SPPWC STD 140 (L=72').
11. CONSTRUCT CROSS GUTTER & LONGITUDINAL GUTTERS PER SPPWC STD 122.
12. TRANSITION CURB HT. FROM 8" ON CRENSHAW TO 6" ON-SITE.
13. CONSTRUCT MOUNTABLE AC CURB PER SPPWC STD 121 D2-6 (150).

CURB DATA

NO.	DELTA/BRG	RADIUS	LENGTH	REMARKS
1	Δ=90°00'00"	35.00'	54.98'	8" CURB & GUTTER
2	Δ=90°00'00"	35.00'	54.98'	8" CURB & GUTTER
3	N00°34'10"W	—	43.10'	" "
4	(SEE SPPWC STD 140)			
5	(SEE SPPWC STD 140)			
6	(SEE SPPWC STD 140)			
7	N00°34'10"W	—	221.64'	8" CURB & GUTTER
8	Δ=90°00'01"	35.00'	54.98'	8" TO 6" CURB & GUTTER
9	Δ=90°00'00"	20.00'	31.62'	6" TO 8" CURB & GUTTER
10	N00°34'10"W	—	5.0'	" "

WORK SHALL BE DONE ON THIS SITE UNTIL BELOW AGENCY IS NOTIFIED OF INTENTION TO GRADE OR EXCAVATE.

811 Know what's below. Call before you dig.

TWO WORKING DAYS BEFORE YOU DIG

0' 10' 20' 40' 60'
SCALE: 1" = 20'

REGISTERED PROFESSIONAL ENGINEER JAMES S. BLISS No. 41785 Exp. 3-31-16 CIVIL STATE OF CALIFORNIA

IMPROVEMENT PLAN - CRENSHAW BOULEVARD

PLAN AND PROFILE OF STREET IMPROVEMENTS FOR 208TH ST. WEST OF CRENSHAW BLVD. AND CRENSHAW BLVD. SOUTH OF 208TH ST.

PSOMAS
3111 Camino Del Rio North, Suite 702
San Diego, CA 92108
(619) 961-2800 (619) 961-2392 fax
www.psomas.com

REV.	DATE	DESCRIPTION	BY	CHECKED

CITY OF TORRANCE
COMMUNITY DEVELOPMENT DEPARTMENT

DRAWN: PRIVATE ENGINEER
DESIGNED: PRIVATE ENGINEER
RECOMMENDED:
PROJECT ENGINEER:
APPROVED:
JEFFERY GIBSON DATE
COMMUNITY DEVELOPMENT DIRECTOR
BUILDING REGULATION ADMINISTRATOR
FELIPE SEGOVIA
R.C.E. NO. 41102 (EXP.03/31/2017)
SCALE: AS SHOWN SHEET 4 OF 6
PLAN NO. ST-1067

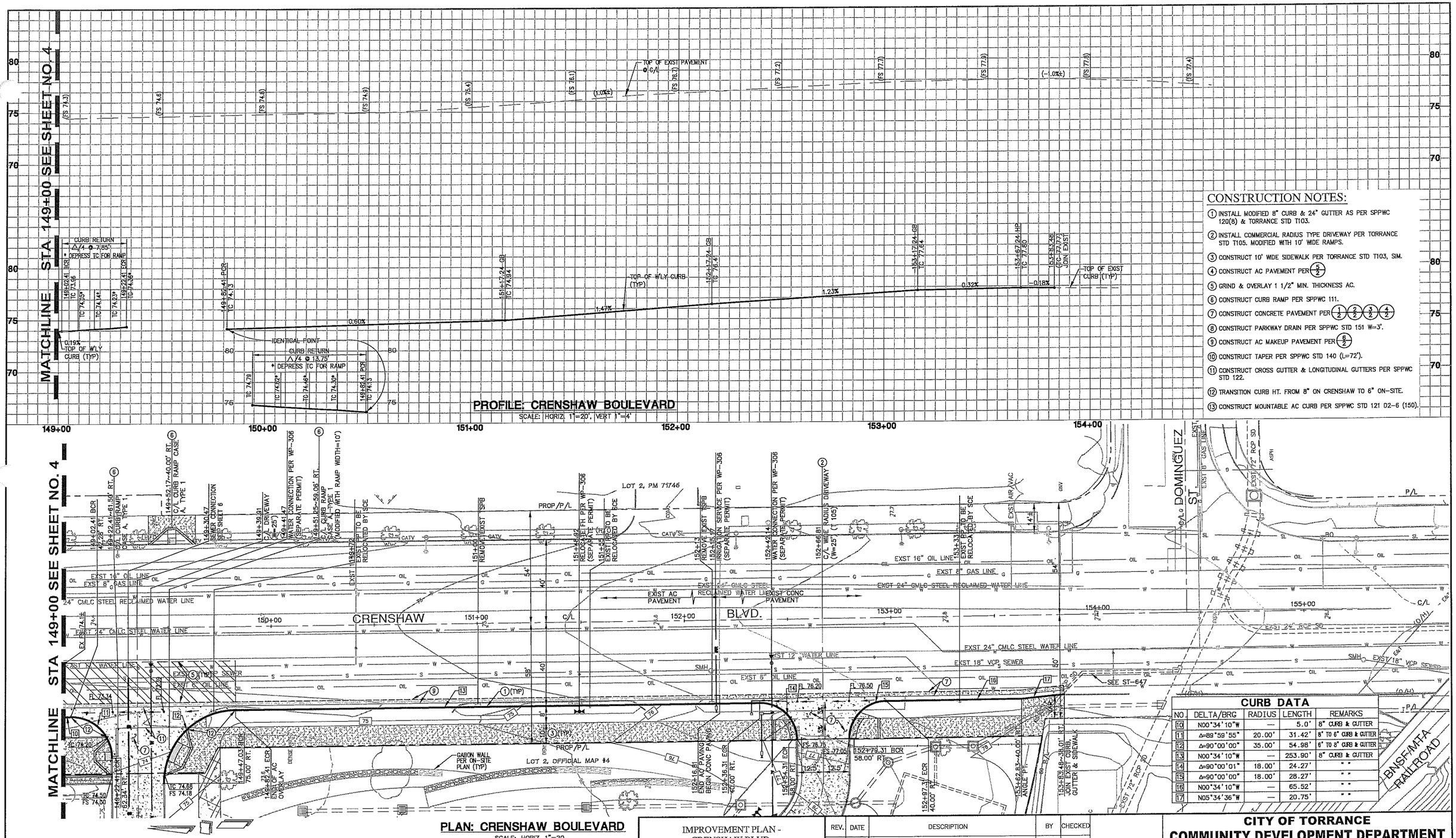

CONSTRUCTION NOTES:

1. INSTALL MODIFIED 8" CURB & 24" GUTTER AS PER SPPWC 120(8) & TORRANCE STD T103.
2. INSTALL COMMERCIAL RADIUS TYPE DRIVEWAY PER TORRANCE STD T105. MODIFIED WITH 10' WIDE RAMPS.
3. CONSTRUCT 10' WIDE SIDEWALK PER TORRANCE STD T103, SIM.
4. CONSTRUCT AC PAVEMENT PER (5/2)
5. GRIND & OVERLAY 1 1/2" MIN. THICKNESS AC.
6. CONSTRUCT CURB RAMP PER SPPWC 111.
7. CONSTRUCT CONCRETE PAVEMENT PER (1/2) (2/2) (3/2) (4/2)
8. CONSTRUCT PARKWAY DRAIN PER SPPWC STD 151 W=3'.
9. CONSTRUCT AC MAKEUP PAVEMENT PER (8/2)
10. CONSTRUCT TAPER PER SPPWC STD 140 (L=72').
11. CONSTRUCT CROSS GUTTER & LONGITUDINAL GUTTERS PER SPPWC STD 122.
12. TRANSITION CURB HT. FROM 8" ON CRENSHAW TO 6" ON-SITE.
13. CONSTRUCT MOUNTABLE AC CURB PER SPPWC STD 121 D2-6 (150).

CURB DATA

NO.	DELTA/BRG	RADIUS	LENGTH	REMARKS
10	N00°34'10"W	—	5.0'	8" CURB & GUTTER
11	Δ=89°59'55"	20.00'	31.42'	8" TO 6" CURB & GUTTER
12	Δ=90°00'00"	35.00'	54.98'	6" TO 8" CURB & GUTTER
13	N00°34'10"W	—	253.90'	8" CURB & GUTTER
14	Δ=90°00'01"	18.00'	24.27'	" "
15	Δ=90°00'00"	18.00'	28.27'	" "
16	N00°34'10"W	—	65.52'	" "
17	N05°34'36"W	—	20.75'	" "

WORK SHALL BE DONE ON THIS SITE UNTIL BELOW AGENCY IS NOTIFIED OF INTENTION TO GRADE OR EXCAVATE.

811 Know what's below. Call before you dig.

TWO WORKING DAYS BEFORE YOU DIG

IMPROVEMENT PLAN - CRENSHAW BLVD.

PLAN AND PROFILE OF STREET IMPROVEMENTS FOR 208TH ST. WEST OF CRENSHAW BLVD. AND CRENSHAW BLVD. SOUTH OF 208TH ST.

PSOMAS
3111 Camino Del Rio North, Suite 702
San Diego, CA 92108
(619) 961-2800 (619) 961-2392 fax
www.psomas.com

REGISTERED PROFESSIONAL ENGINEER JAMES S. BUSSE No. 41789 Exp. 3-31-16 CIVIL STATE OF CALIFORNIA

REV.	DATE	DESCRIPTION	BY	CHECKED

CITY OF TORRANCE
COMMUNITY DEVELOPMENT DEPARTMENT

DRAWN: PRIVATE ENGINEER
DESIGNED: PRIVATE ENGINEER
PROJECT ENGINEER:
APPROVED:
RECOMMENDED:
JEFFERY GIBSON DATE
COMMUNITY DEVELOPMENT DIRECTOR
BUILDING REGULATION ADMINISTRATOR
FELIPE SEGOVIA
R.C.E. NO. 41102 (EXP.03/31/2017)
SCALE: AS SHOWN SHEET 5 OF 6
PLAN NO. **ST-1067**

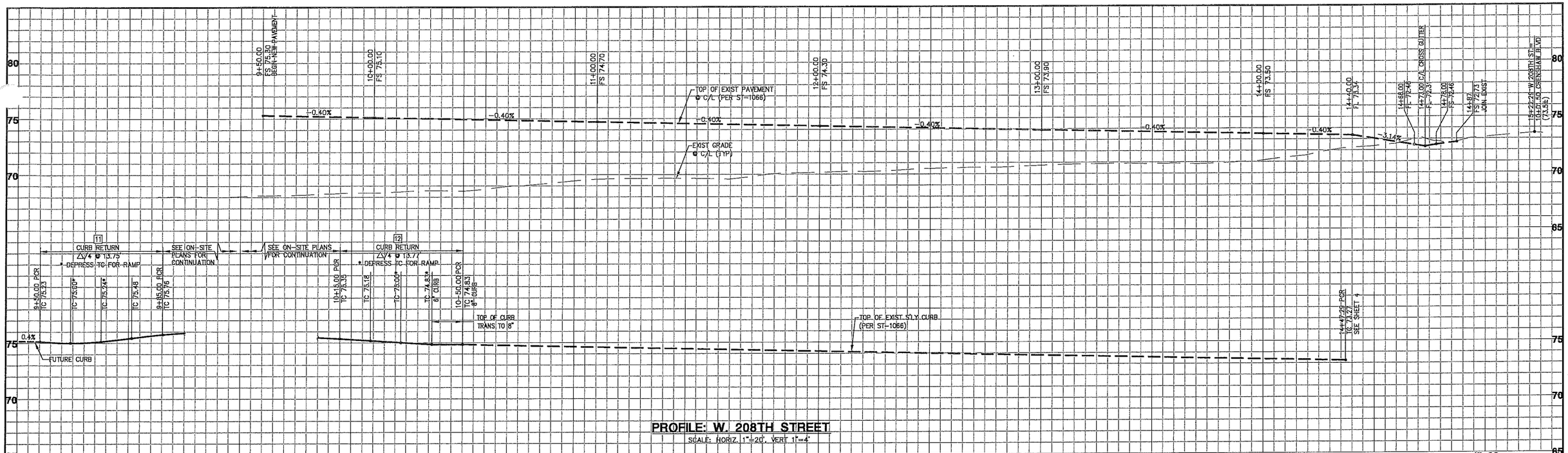

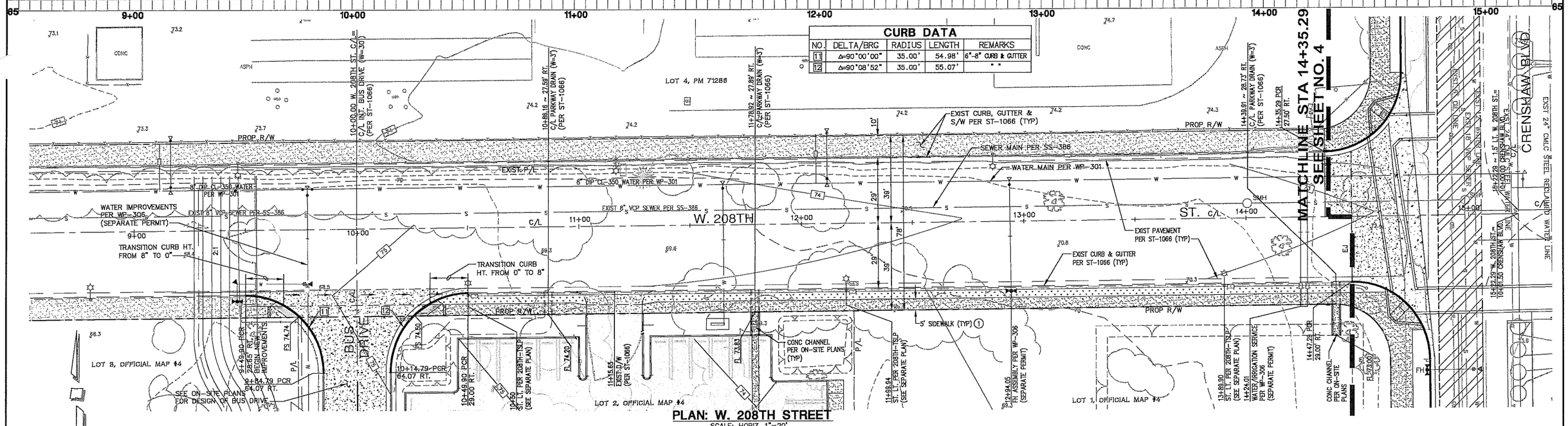

0' 10' 20' 40' 60'
SCALE: 1" = 20'

WORK SHALL BE DONE ON THIS SITE UNTIL BELOW AGENCY IS NOTIFIED OF INTENTION TO GRADE OR EXCAVATE.

811 Know what's below. Call before you dig.

TWO WORKING DAYS BEFORE YOU DIG

CONSTRUCTION NOTES:

1. CONSTRUCT 5' WIDE SIDEWALK PER TORRANCE STD T103, SIM.

REGISTERED PROFESSIONAL ENGINEER JAMES S. BUSS No. 41795 Exp. 3-31-16 CIVIL STATE OF CALIFORNIA

IMPROVEMENT PLAN - W. 208TH ST.

PLAN AND PROFILE OF STREET IMPROVEMENTS FOR 208TH ST. WEST OF CRENSHAW BLVD. AND CRENSHAW BLVD. SOUTH OF 208TH ST.

PSOMAS
3111 Camino Del Rio North, Suite 702
San Diego, CA 92108
(619) 961-2800 (619) 961-2392 fax
www.psomas.com

REV.	DATE	DESCRIPTION	BY	CHECKED

CITY OF TORRANCE
COMMUNITY DEVELOPMENT DEPARTMENT

DRAWN: PRIVATE ENGINEER
DESIGNED: PRIVATE ENGINEER
PROJECT ENGINEER:
APPROVED:
BUILDING REGULATION ADMINISTRATOR FELIPE SEGOVIA R.C.E. NO. 41102 (EXP.03/31/2017)

RECOMMENDED:
JEFFERY GIBSON DATE
COMMUNITY DEVELOPMENT DIRECTOR

SCALE: AS SHOWN SHEET 6 OF 6

PLAN NO. **ST-1067**

Appendix C: Permit Registration Documents

Permit Registration Documents included in this Appendix

Y/N	Permit Registration Document
	Notice of Intent
	Risk Assessment
	Certification
	Post Construction Water Balance
	Copy of Annual Fee Receipt
	ATS Design Documents
	Site Map, see Appendix B

Combined Risk Level Matrix

Receiving Water Risk	Sediment Risk: Low	Sediment Risk: Medium	Sediment Risk: High
Low	Level 1	Level 2	
High	Level 2		Level 3

Project Sediment Risk: Low

Project RW Risk: Low

Project Combined Risk: Level 1

	A	B	C
1	**Sediment Risk Factor Worksheet**		**Entry**
2	**A) R Factor**		
3	Analyses of data indicated that when factors other than rainfall are held constant, soil loss is directly proportional to a rainfall factor composed of total storm kinetic energy (E) times the maximum 30-min intensity (I30) (Wischmeier and Smith, 1958). The numerical value of R is the average annual sum of EI30 for storm events during a rainfall record of at least 22 years. "Isoerodent" maps were developed based on R values calculated for more than 1000 locations in the Western U.S. Refer to the link below to determine the R factor for the project site.		
4	http://cfpub.epa.gov/npdes/stormwater/LEW/lewCalculator.cfm		
5	**R Factor Value**		35
6	**B) K Factor (weighted average, by area, for all site soils)**		
7	The soil-erodibility factor K represents: (1) susceptibility of soil or surface material to erosion, (2) transportability of the sediment, and (3) the amount and rate of runoff given a particular rainfall input, as measured under a standard condition. Fine-textured soils that are high in clay have low K values (about 0.05 to 0.15) because the particles are resistant to detachment. Coarse-textured soils, such as sandy soils, also have low K values (about 0.05 to 0.2) because of high infiltration resulting in low runoff even though these particles are easily detached. Medium-textured soils, such as a silt loam, have moderate K values (about 0.25 to 0.45) because they are moderately susceptible to particle detachment and they produce runoff at moderate rates. Soils having a high silt content are especially susceptible to erosion and have high K values, which can exceed 0.45 and can be as large as 0.65. Silt-size particles are easily detached and tend to crust, producing high rates and large volumes of runoff. Use Site-specific data must be submitted.		
8	Site-specific K factor guidance		
9	**K Factor Value**		0.2
10	**C) LS Factor (weighted average, by area, for all slopes)**		
11	The effect of topography on erosion is accounted for by the LS factor, which combines the effects of a hillslope-length factor, L, and a hillslope-gradient factor, S. Generally speaking, as hillslope length and/or hillslope gradient increase, soil loss increases. As hillslope length increases, total soil loss and soil loss per unit area increase due to the progressive accumulation of runoff in the downslope direction. As the hillslope gradient increases, the velocity and erosivity of runoff increases. Use the LS table located in separate tab of this spreadsheet to determine LS factors. Estimate the weighted LS for the site prior to construction.		
12	LS Table		
13	**LS Factor Value**		0.06
14			
15	**Watershed Erosion Estimate (=RxKxLS) in tons/acre**		0.42
16	**Site Sediment Risk Factor**		**Low**
17	Low Sediment Risk: < 15 tons/acre		
18	Medium Sediment Risk: >=15 and <75 tons/acre		
19	High Sediment Risk: >= 75 tons/acre		
20			

United States Environmental Protection Agency

Office of Water (4203)

EPA 833-F-00-014
Revised March 2012
Fact Sheet 3.1[1]

Stormwater Phase II Final Rule

Construction Rainfall Erosivity Waiver

Stormwater Phase II Final Rule Fact Sheet Series

Overview

1.0 – Stormwater Phase II Proposed Rule Overview

Small MS4 Program

2.0 – Small MS4 Stormwater Program Overview

2.1 – Who's Covered? Designation and Waivers of Regulated Small MS4s

2.2 – Urbanized Areas: Definition and Description

Minimum Control Measures

2.3 – Public Education and Outreach

2.4 – Public Participation/ Involvement

2.5 – Illicit Discharge Detection and Elimination

2.6 – Construction Site Runoff Control

2.7 – Post-Construction Runoff Control

2.8 – Pollution Prevention/Good Housekeeping

2.9 – Permitting and Reporting: The Process and Requirements

2.10 – Federal and State-Operated MS4s: Program Implementation

Construction Program

3.0 – Construction Program Overview

3.1 – Construction Rainfall Erosivity Waiver

Industrial "No Exposure"

4.0 – Conditional No Exposure Exclusion for Industrial Activity

The 1972 amendments to the Federal Water Pollution Control Act, later referred to as the Clean Water Act (CWA), prohibit the discharge of any pollutant to navigable waters of the United States unless the discharge is authorized by a National Pollutant Discharge Elimination System (NPDES) permit. Because construction site stormwwater runoff can contribute significantly to water quality problems, the Phase I Stormwater Rule imposed a requirement that all construction sites with a planned land disturbance of 5 acres or more obtain an NPDES permit and implement stormwater runoff control plans. Phase II extends the requirements of the stormwater program to sites of between 1 and 5 acres. The Rainfall erosivity waiver allows permitting authorities to waive those sites that do not have adverse water quality impacts.

What is Erosivity?

Erosivity is the term used to describe the potential for soil to wash off disturbed, devegetated earth during storms. The potential for erosion is in part determined by the soil type and geology of the site. For instance, dense, clay-like soils on a glacial plain will erode less readily when it rains than will sandy soils on the side of a hill. Another important factor is the amount and force of precipitation expected during the time the earth will be exposed. While it is impossible to predict the weather several months in advance of construction, for many areas of the country, there are definite optimal periods, such as a dry season when rain tends to fall less frequently and with less force. When feasible, this is the time to disturb the earth, so that the site can be stabilized by the time the seasonal wet weather returns. There are many other important factors to consider in determining erosivity, such as freeze/thaw cycles and snow pack.

How Is Site Erosivity Determined?

The Universal Soil Loss Equation (USLE) was developed by the U.S. Department of Agriculture (USDA) in the 1950s to help farmers conserve their valuable topsoil. The methodology for determining if a site qualifies for the erosivity waiver provided in this guide is based on the *USDA Handbook 703 - Predicting Soil Erosion by Water: A Guide to Conservation Planning With the Revised Universal Soil Loss Equation (RUSLE)*, dated January 1997. (Note that a more updated version of USLE, the Revised USLE, Version 2 (RUSLE2), is available and can be used as an alternative method for determining if a site qualifies for the erosivity waiver. Information about the RUSLE2 computer program is provided later in this fact sheet.)

Using a computer model supported by decades' worth of soil and rainfall data, USDA established estimates of annual erosivity values (R factors) for sites throughout the country. These R factors are used as surrogate measures of the impact that rainfall had on erosion from a particular site. They have been mapped using isoerodent contours, as shown in Figures 2 through 5.

USDA developed the Erosivity Index Table (EI Table, provided here in Table 1), to show how the annual erosivity factor is distributed throughout the year in two-week increments. Table 1 is based on 120 rainfall distribution zones for the continental U.S. Detailed instructions for calculating a project R factor are provided later in this fact sheet.

[1] This revised fact sheet corrects errors identified in calculating the R factor from the 2001 version, and includes updated information about the USLE.

The Stormwater Phase II rule allows permitting authorities to waive NPDES requirements for small construction sites if the value of the rainfall erosivity factor is less than 5 during the period of construction activity (see § 122.26(b)(15)(i)(A)). Note that the permitting authority has the option to not allow waivers for small construction activity.

If the R factor for the period of construction calculates to less than 5, and the permitting authority allows the use of the waiver, the site owner may apply for a waiver under the low rainfall erosivity provision of the applicable EPA or State NPDES regulations. When applying, owners are encouraged to consider other site-specific factors, such as proximity to water resources and the sensitivity of receiving waters to sedimentation impacts. The small construction operator must certify to the permitting authority that the construction activity will take place during a period when the rainfall erosivity factor is less than 5.

The start and end dates used for the construction activity will be the initial date of disturbance and the anticipated date when the site will have achieved final stabilization as defined by the permit, respectively. If the construction continues beyond this period, the operator will need to recalculate the Erosivity Index for the site based on this new ending date (but keeping the old start date) and either resubmit the certification form or apply for NPDES permit coverage.

What Other Factors Can Affect Waiver Availability and Eligibility?

EPA has established the R factor of less than 5 as the criteria for determining waiver eligibility. However, since the intent is to waive only those construction activities that will not adversely impact water quality, State and Tribal permitting authorities have considerable discretion in determining where, when, and how to offer it. They can establish an R factor threshold lower than 5, or they can suspend the waiver within an area where watersheds are known to be heavily impacted by, or sensitive to, sedimentation. They can also suspend the waiver during certain periods of the year. They may opt not to offer the waiver at all. NOTE: This waiver is not available to sites that will disturb more than 5 acres of land (large construction).

What if My Site Is Not Eligible?

If your site is not eligible for a waiver, you must submit a Notice of Intent, or whichever type of application is required, to obtain coverage under the applicable NPDES construction stormwater permit, and comply with its requirements. For information about EPA's Construction General Permit (CGP), see http://www.epa.gov/npdes/stormwater/cgp. State program information is available at http://cfpub.epa.gov/npdes/contacts.cfm?program_id=6&type=STATE.

Examples

1. Construction started and completed in one calendar year.

Find the R factor value of a construction site in Denver, Colorado. Assume the site will be disturbed from March 10 to May 10 of the same year.

The EI distribution zone is 84 (Figure 1). Referring to Table 1, the project period will span from March 1 (from Table 1, the closest date prior to the actual March 10 start date) to May 15 (from Table 1, the closest date after the actual May 10 end date). The difference in values between these two dates is 9.7% (9.9 - 0.2 = 9.7). Since the annual erosion index for this location is about 45 (interpolated from Figure 2), the R factor for the scheduled construction project is 9.7% of 45, or 4.4.

Because 4.4 is less than 5, the operator of this site would be able to seek a waiver under the low rainfall erosivity provision.

2. Construction spanning two calendar years.

Find the R factor value for a construction site in Pittsburgh, Pennsylvania. Assume the site will be disturbed from August 1 to April 15.

The EI distribution zone is 111 (Figure 1). Referring to Table 1, the project period will span from July 29 (from Table 1, the closest date prior to the actual August 1 start date) to April 15. The difference in values between July 29 and December 31 is 35% (100 - 65.0 = 35.0). The difference between January 1 and April 15 is 8%. The total percentage EI for this project is 43% (35 + 8 = 43). Since the annual erosion index for this location is 112 (interpolated from Figure 2), the R factor for the scheduled construction is 43% of 112, or 48.

Since 48 is greater than 5, the operator of this site would not be able to seek a waiver under the low rainfall erosivity provision.

How Do I Compute the R factor for My Project?

1. Estimate the construction start date. This is the day you expect to begin disturbing soils, including grubbing, stockpiling, excavating, and grading activities.
2. Estimate the day you expect to achieve final stabilization, as defined by your permitting authority's regulations or NPDES construction stormwater permit, over all previous disturbed areas. This is your construction end date.
3. Refer to Figure 1 to find your Erosivity Index (EI) Zone based on your geographic location.

4. Refer to Table 1, the Erosivity Index (EI) Table. Find the number of your EI Zone in the left column. Locate the EI values for the dates that correspond to the project start and end dates you identified in Steps 1 and 2. If your specific date is not on the table, either interpolate between dates to obtain your %EI value, or use the closest date prior to your proposed start date and the closest date after your proposed end date. Subtract the start value from the end value to find the % EI for your site. The maximum annual EI value for a project is 100%. NOTE: If your project lasts for one year or more, your EI value is 100%.
5. Refer to the appropriate Isoerodent Map (Figures 2 through 5). Interpolate the annual isoerodent value for your area. This is the annual R factor for your site.
6. Multiply the percent value obtained in Step 4 by the annual isoerodent value obtained in Step 5. This is the R factor for your scheduled project.

Can I Use a Personal Computer to Calculate the R factor?

The computer program used by USDA to evaluate erosion potential is called the Revised Universal Soil Loss Equation, or RUSLE. The current version of RUSLE (RUSLE2) is a Windows-based model that uses extensive databases that are geographically-linked. RUSLE2 can be used to calculate the R factor for a proposed construction site; however, RUSLE2 can require a large investment of time to set up. RUSLE2 can be downloaded free of charge from the Internet at http://fargo.nserl.purdue.edu/rusle2_dataweb/RUSLE2_Index.htm. Note that RUSLE2 is an upgrade of RUSLE, and contains more detailed data. Therefore, your calculated R factor may differ based on whether you calculate your R factor using the methods specified above, which utilizes data from *USDA Handbook 703 - Predicting Soil Erosion by Water: A Guide to Conservation Planning With the Revised Universal Soil Loss Equation (RUSLE)*, January 1997, or whether you calculate your R factor using the more updated RUSLE2. EPA notes that either method of calculation is acceptable for determining eligibility for the construction rainfall erosivity waiver.

Where Can I Get Help?

- A copy of "Chapter 2, Rainfall-Runoff Erosivity Factor (R)" from the *USDA Handbook 703 - Predicting Soil Erosion by Water: A Guide to Conservation Planning With the Revised Universal Soil Loss Equation (RUSLE)*, January 1997, is available on EPA's web site at http://www.epa.gov/npdes/pubs/ruslech2.pdf.
- Information about RUSLE2, and a download of the program, is available at http://fargo.nserl.purdue.edu/rusle2_dataweb/.
- Your local USDA Service Center may be able to provide assistance with calculating R factors and other conservation-related issues. To find the office nearest you, go to http://www.nrcs.usda.gov/wps/portal/nrcs/main/national/contact/local.

For Additional Information

Reference Documents

Stormwater Phase II Final Rule Fact Sheet Series
- Internet: cfpub.epa.gov/npdes/stormwater/swfinal.cfm

Stormwater Phase II Final Rule (64 *FR* 68722)
- Internet: www.epa.gov/npdes/regulations/phase2.pdf
- Contact the U.S. EPA Water Resource Center (Phone: (202) 564-9545)

Agricultural Handbook Number 703, Predicting Soil Erosion by Water: A Guide to Conservation Planning With the Revised Universal Soil Loss Equation (RUSLE), Chapter 2, pp. 21-64, January 1997.
- Internet: www.epa.gov/npdes/pubs/ruslech2.pdf

Figure 1. Erosivity Index Zone Map

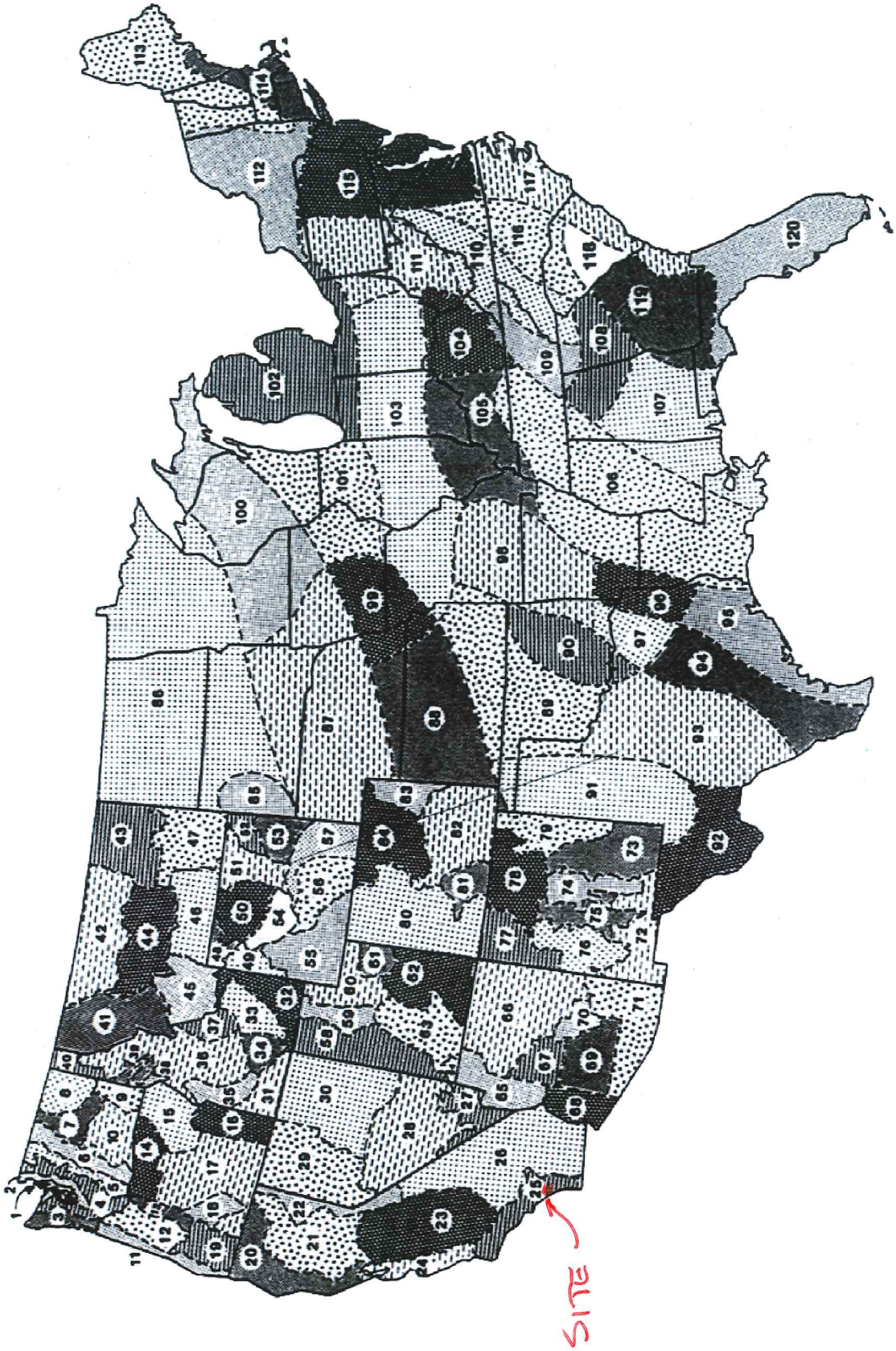

Figure 2. Isoerodent Map of the Eastern U.S.

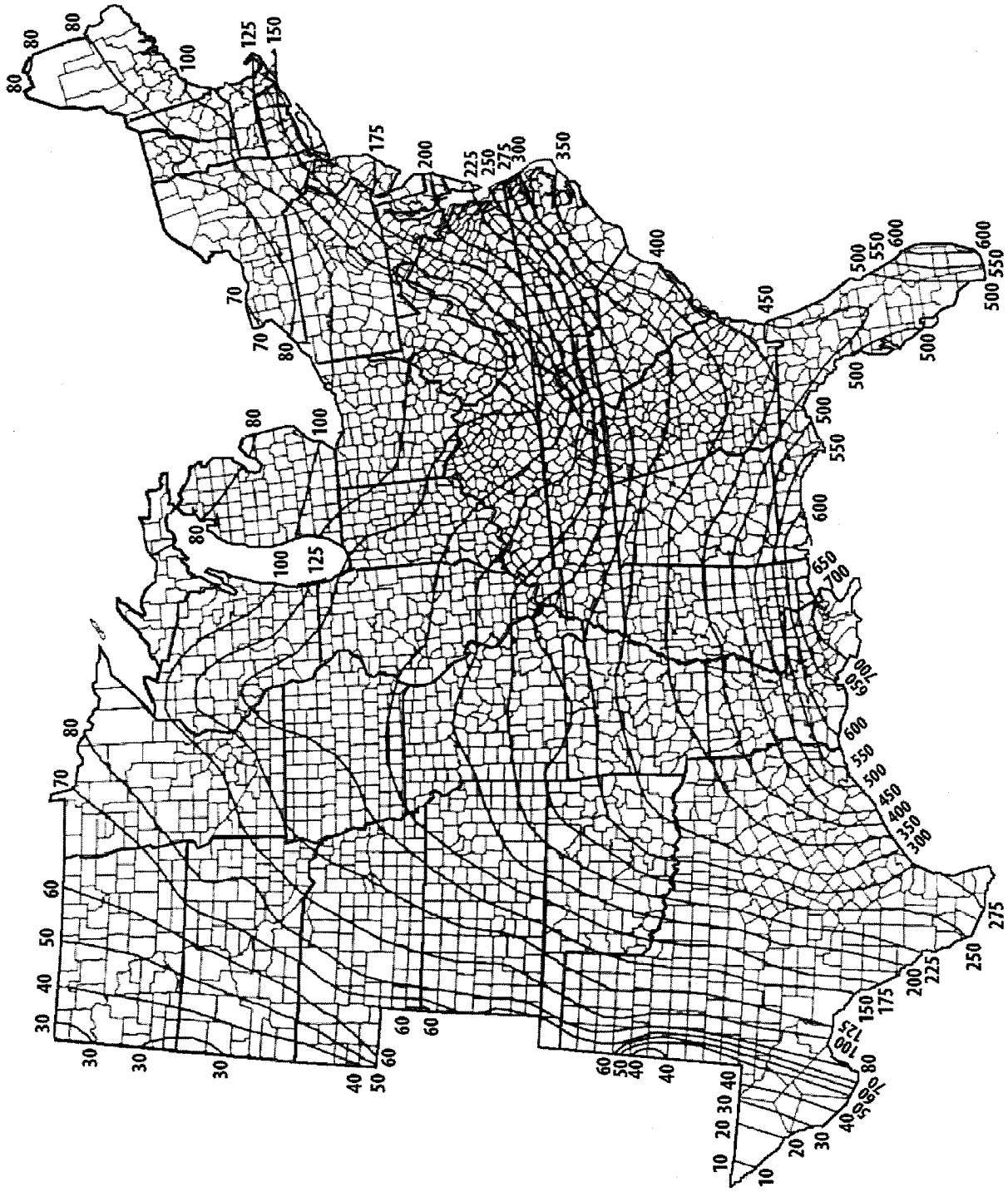

Note: Units for all maps on this page are hundreds ft•tonf•in(ac•h•yr)$^{-1}$

Figure 3. Isoerodent Map of the Western U.S.

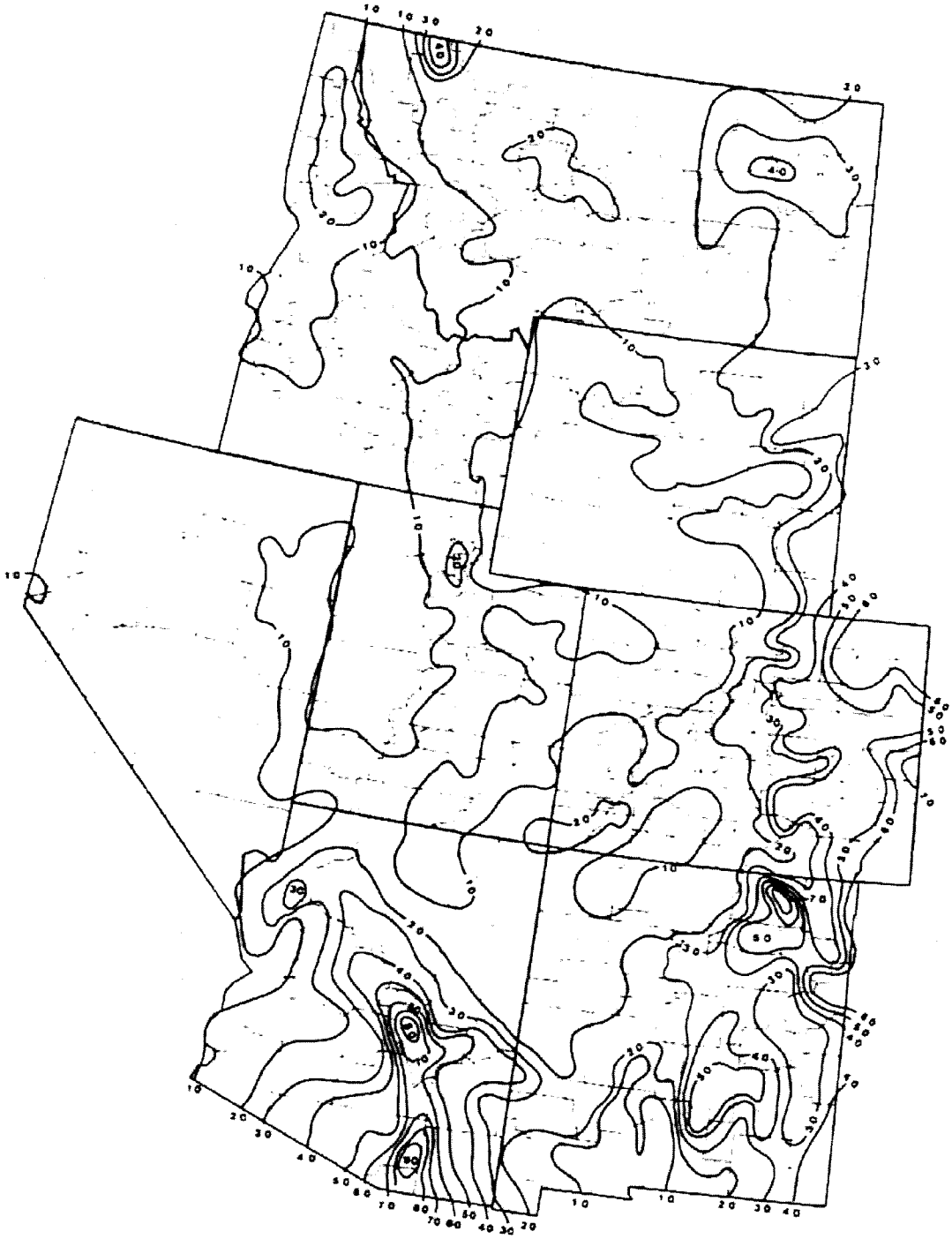

Note: Units for all maps on this page are hundreds ft•tonf•in(ac•h•yr)$^{-1}$

Figure 4. Isoerodent Map of California

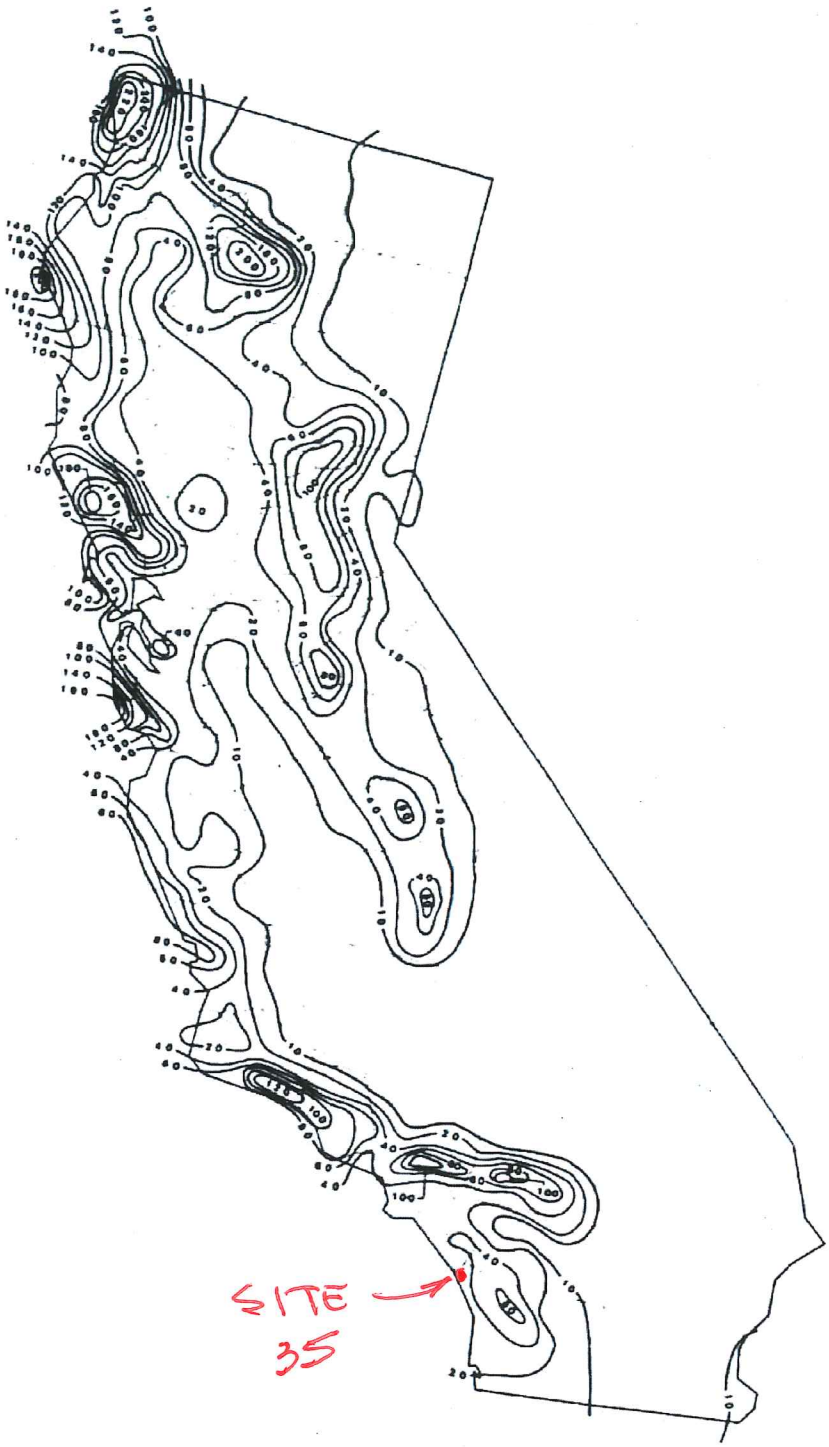

Note: Units for all maps on this page are hundreds ft•tonf•in(ac•h•yr)$^{-1}$

Figure 5. Isoerodent Map of Oregon and Washington

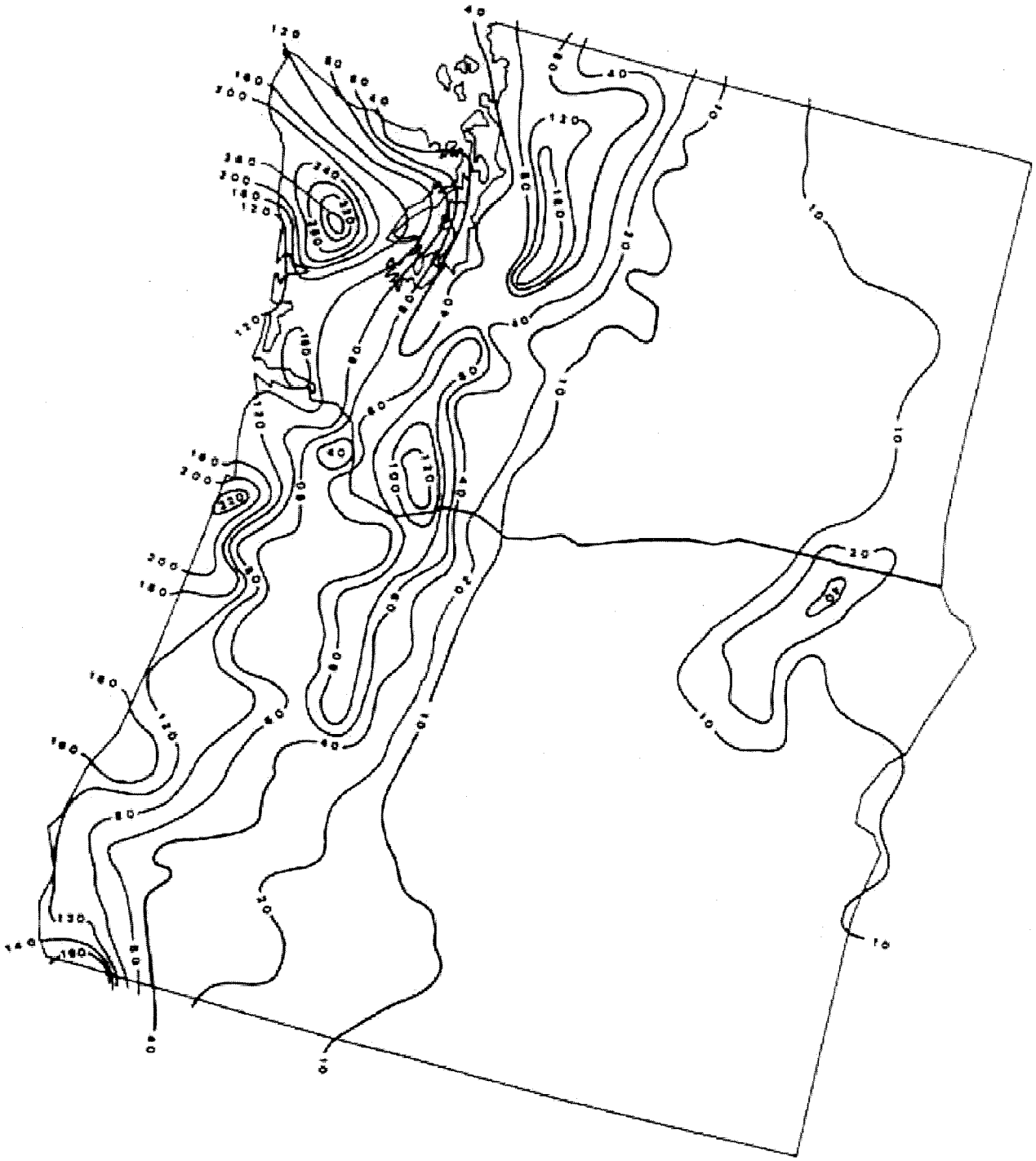

Note: Units for all maps on this page are hundreds ft•tonf•in(ac•h•yr)$^{-1}$

Table 1. Erosivity Index (%EI Values extracted from USDA Manual 703)

All values are at the end of the day listed below - Linear interpolation between dates is acceptable.
EI as a percentage of Average Annual R Value Computed for Geographic Areas Shown in Figure 1

Month	Jan	Jan	Jan	Feb	Mar	Mar	Mar	Apr	Apr	May	May	Jun	Jun	Jul	Jul	Aug	Aug	Sept	Sept	Oct	Oct	Nov	Nov	Dec	Dec
Day	1	16	31	15	1	16	31	15	30	15	30	14	29	14	29	13	28	12	27	12	27	11	26	11	31
EI Zone																									
1	0	4.3	8.3	12.8	17.3	21.6	25.1	28	30.9	34.9	39.1	42.6	45.4	48.2	50.8	53	56	60.8	66.8	71	75.7	82	89.1	95.2	100
2	0	4.3	8.3	12.8	17.3	21.6	25.1	28.0	30.9	34.9	39.1	42.6	45.4	48.2	50.8	53.0	56.0	60.8	66.8	71.0	75.7	82.0	89.1	95.2	100
3	0	7.4	13.8	20.9	26.5	31.8	35.3	38.5	40.2	41.6	42.5	43.6	44.5	45.1	45.7	46.4	47.7	49.4	52.8	57.0	64.5	73.1	83.3	92.3	100
4	0	3.9	7.9	12.6	17.4	21.6	25.2	28.7	31.9	35.1	38.2	42.0	44.9	46.7	48.2	50.1	53.1	56.6	62.2	67.9	75.2	83.5	90.5	96.0	100
5	0	2.3	3.6	4.7	6.0	7.7	10.7	13.9	17.8	21.2	24.5	28.1	31.1	33.1	35.3	38.2	43.2	48.7	57.3	67.8	77.9	86.0	91.3	96.9	100
6	0	0.0	0.0	0.5	2.0	4.1	8.1	12.6	17.6	21.6	25.5	29.6	34.5	40.0	45.7	50.7	55.6	60.2	66.5	75.5	85.6	95.9	99.5	99.9	100
7	0	0.0	0.0	0.0	0.0	1.2	4.9	8.5	13.9	19.0	26.0	35.4	43.9	48.8	53.9	64.5	73.4	77.5	80.4	84.8	89.9	96.6	99.2	99.7	100
8	0	0.0	0.0	0.0	0.0	0.9	3.6	7.8	15.0	20.2	27.4	38.1	49.8	57.9	65.0	75.6	82.7	86.8	89.4	93.4	96.3	99.1	100.0	100.0	100
9	0	0.8	3.1	4.7	7.4	11.7	17.8	22.5	27.0	31.4	36.0	41.6	46.4	50.1	53.4	57.4	61.7	64.9	69.7	79.0	89.6	97.4	100.0	100.0	100
10	0	0.3	0.5	0.9	2.0	4.3	9.2	13.1	18.0	22.7	29.2	39.5	46.3	48.8	51.1	57.2	64.4	67.7	71.1	77.2	85.1	92.5	96.5	99.0	100
11	0	5.4	11.3	18.8	26.3	33.2	37.4	40.7	42.5	44.3	45.4	46.5	47.1	47.4	47.8	48.3	49.4	50.7	53.6	57.5	65.5	76.2	87.4	94.8	100
12	0	3.5	7.8	14.0	21.1	27.4	31.5	35.0	37.3	39.8	41.9	44.3	45.6	46.3	46.8	47.9	50.0	52.9	57.9	62.3	69.3	81.3	91.5	96.7	100
13	0	0.0	0.0	1.8	7.2	11.9	16.7	19.7	24.0	31.2	42.4	55.0	60.0	60.8	61.2	62.6	65.3	67.6	71.6	76.1	83.1	93.3	98.2	99.6	100
14	0	0.7	1.8	3.3	6.9	16.5	26.6	29.9	32.0	35.4	40.2	45.1	51.9	61.1	67.5	70.7	72.8	75.4	78.6	81.9	86.4	93.6	97.7	99.3	100
15	0	0.0	0.0	0.5	2.0	4.4	8.7	12.0	16.6	21.4	29.7	44.5	56.0	60.8	63.9	69.1	74.5	79.1	83.1	87.0	90.9	96.6	99.1	99.8	100
16	0	0.0	0.0	0.5	2.0	5.5	12.3	16.2	20.9	26.4	35.2	48.1	58.1	63.1	66.5	71.9	77.0	81.6	85.1	88.4	91.5	96.3	98.7	99.6	100
17	0	0.0	0.0	0.7	2.8	6.1	10.7	12.9	16.1	21.9	32.8	45.9	55.5	60.3	64.0	71.2	77.2	80.3	83.1	87.7	92.6	97.2	99.1	99.8	100
18	0	0.0	0.0	0.6	2.5	6.2	12.4	16.4	20.2	23.9	29.3	37.7	45.6	49.8	53.3	58.4	64.3	69.0	75.0	86.6	93.9	96.6	98.0	100.0	100
19	0	1.0	2.6	7.4	16.4	23.5	28.0	31.0	33.5	37.0	41.7	48.1	51.1	52.0	52.5	53.6	55.7	57.6	61.1	65.8	74.7	88.0	95.8	98.7	100
20	0	9.8	18.5	25.4	30.2	35.6	38.9	41.5	42.9	44.0	45.2	48.2	50.8	51.7	52.5	54.6	57.4	58.5	60.1	63.2	69.6	76.7	85.4	92.4	100
21	0	7.5	13.6	18.1	21.1	24.4	27.0	29.4	31.7	34.6	37.3	39.6	41.6	43.4	45.4	48.1	51.3	53.3	56.6	62.4	72.4	81.3	88.9	94.7	100
22	0	1.2	1.6	1.6	1.6	1.6	1.6	2.2	3.9	4.6	6.4	14.2	32.8	47.2	58.8	69.1	76.0	82.0	87.1	96.7	99.9	99.9	99.9	99.9	100
23	0	7.9	15.0	20.9	25.7	31.1	35.7	40.2	43.2	46.2	47.7	48.8	49.4	49.9	50.7	51.8	54.1	57.7	62.8	65.9	70.1	77.3	86.8	93.5	100
24	0	12.2	23.6	33.0	39.7	47.1	51.7	55.9	57.7	58.6	58.9	59.1	59.1	59.2	59.2	59.3	59.5	60.0	61.4	63.0	66.5	71.8	81.3	89.6	100
25	0	9.8	20.8	30.2	37.6	45.8	50.6	54.4	56.0	56.8	57.1	57.1	57.2	57.6	58.5	59.8	62.2	65.3	67.5	68.2	69.4	74.8	86.6	93.0	100
26	0	2.0	5.4	9.8	15.6	21.5	24.7	26.6	27.4	28.0	28.7	29.8	32.5	36.6	44.9	55.4	65.7	72.6	77.8	84.4	89.5	93.9	96.5	98.4	100
27	0	0.0	0.0	1.0	4.0	5.9	8.0	11.1	13.0	14.0	14.6	15.3	17.0	23.2	39.1	60.0	76.3	86.1	89.7	90.4	90.9	93.1	96.6	99.1	100
28	0	0.0	0.0	0.0	0.2	0.5	1.5	3.3	7.2	11.9	17.7	21.4	27.0	37.1	51.4	62.3	70.6	78.8	84.6	90.6	94.4	97.9	99.3	100.0	100
29	0	0.6	0.7	0.7	0.7	1.5	3.9	6.0	10.5	17.9	28.8	36.6	43.8	51.5	59.3	68.0	74.8	80.3	84.3	88.8	92.7	98.0	99.8	99.9	100
30	0	0.0	0.0	0.0	0.0	0.2	0.8	2.8	7.9	14.2	24.7	35.6	45.4	52.2	58.7	68.5	77.6	84.5	88.9	93.7	96.2	97.6	98.3	99.6	100
31	0	0.0	0.0	0.0	0.0	0.2	1.0	3.5	9.9	15.7	26.4	47.2	61.4	65.9	69.0	77.2	86.0	91.6	94.8	98.7	100.0	100.0	100.0	100.0	100
32	0	0.1	0.1	0.1	0.1	0.6	2.2	4.3	9.0	14.2	23.3	34.6	46.3	54.2	61.7	72.9	82.5	89.6	93.7	98.2	99.7	99.9	99.9	99.9	100
33	0	0.0	0.0	0.0	0.0	0.6	2.3	4.2	8.8	16.1	30.0	46.9	57.9	62.8	66.2	72.1	79.1	85.9	91.1	97.0	98.9	98.9	98.9	98.9	100
34	0	0.0	0.0	0.0	0.0	1.8	7.3	10.7	15.5	22.0	29.9	35.9	42.0	48.5	56.9	67.0	76.9	85.8	91.2	95.7	97.8	99.6	100.0	100.0	100
35	0	0.0	0.0	0.0	0.0	2.5	10.2	15.9	22.2	27.9	34.7	43.9	51.9	56.9	61.3	67.3	73.9	80.1	85.1	89.6	93.2	98.2	99.8	99.8	100

R = (100 - 0) x 35 = 35

Month	Jan	Jan	Jan	Feb	Mar	Mar	Mar	Apr	Apr	May	May	Jun	Jun	Jul	Jul	Aug	Aug	Sept	Sept	Oct	Oct	Nov	Nov	Dec	Dec
Day	1	16	31	15	1	16	31	15	30	15	30	14	29	14	29	13	28	12	27	12	27	11	26	11	31
EI Zone																									
36	0	0.0	0.0	0.0	0.0	0.9	3.4	6.7	12.7	18.5	26.6	36.3	46.0	53.5	60.2	68.3	75.8	82.6	88.3	96.3	99.3	99.9	100.0	100.0	100
37	0	0.0	0.0	0.0	0.0	0.0	0.0	1.0	3.9	9.1	19.1	26.7	36.3	47.9	61.4	75.1	84.5	92.3	96.0	99.1	100.0	100.0	100.0	100.0	100
38	0	0.0	0.0	1.1	4.3	7.2	11.0	13.9	17.9	22.3	30.3	43.1	55.1	61.3	65.7	72.1	77.9	82.6	86.3	90.3	93.8	98.4	100.0	100.0	100
39	0	0.0	0.0	0.0	0.0	1.6	6.5	11.0	17.8	24.7	33.1	42.8	50.3	54.9	59.7	68.9	78.1	83.6	87.5	93.0	96.5	99.2	100.0	100.0	100
40	0	0.0	0.0	0.0	0.0	1.5	6.2	10.1	16.3	23.3	32.5	42.2	50.1	55.6	60.5	67.5	74.3	79.4	84.1	91.1	95.8	99.1	100.0	100.0	100
41	0	0.1	0.2	0.2	0.2	0.2	0.2	0.4	1.1	6.8	22.9	40.1	54.9	63.8	70.7	81.5	89.8	96.3	98.7	99.2	99.3	99.4	99.4	99.7	100
42	0	0.0	0.0	0.0	0.0	0.0	0.0	0.2	0.9	5.2	17.3	33.8	53.2	66.5	75.9	87.6	93.7	97.5	99.0	99.7	100.0	100.0	100.0	100.0	100
43	0	0.0	0.0	0.0	0.0	0.0	0.0	0.1	0.4	2.7	9.5	21.9	42.7	58.6	71.1	84.6	91.9	97.1	99.0	99.8	100.0	100.0	100.0	100.0	100
44	0	1.7	2.3	2.4	2.4	2.4	2.4	2.7	3.5	7.6	18.5	34.3	52.5	64.0	72.3	83.3	90.0	95.1	97.3	98.5	98.9	98.9	98.9	99.2	100
45	0	0.2	0.2	0.3	0.3	0.4	0.6	0.8	1.4	3.7	10.2	22.6	41.8	54.0	64.5	78.7	88.4	96.0	98.7	99.4	99.7	99.7	99.8	99.9	100
46	0	0.0	0.0	0.0	0.0	0.0	0.0	0.6	2.6	7.5	19.6	32.9	48.9	63.0	73.5	83.3	89.5	95.6	98.3	99.6	100.0	100.0	100.0	100.0	100
47	0	0.0	0.0	0.0	0.0	0.0	0.0	0.4	1.6	5.8	17.0	33.0	52.5	66.4	75.7	85.5	91.3	96.5	98.8	100.0	100.0	100.0	100.0	100.0	100
48	0	0.0	0.0	0.0	0.0	0.0	0.0	0.0	0.0	2.0	8.1	15.4	27.8	40.7	52.6	61.1	69.3	82.6	92.0	98.0	100.0	100.0	100.0	100.0	100
49	0	0.0	0.0	0.0	0.0	0.0	0.0	0.7	2.7	8.3	20.0	27.5	35.6	44.6	46.0	70.2	81.3	89.2	93.6	98.5	100.0	100.0	100.0	100.0	100
50	0	0.0	0.0	0.0	0.0	0.1	0.4	2.4	8.2	13.7	23.8	38.8	55.1	66.1	73.6	81.8	87.7	93.8	97.0	99.4	100.0	100.0	100.0	100.0	100
51	0	0.0	0.0	0.0	0.0	0.3	1.0	3.1	8.7	18.8	35.8	49.6	60.4	70.2	77.0	84.0	88.8	93.8	96.6	99.1	100.0	100.0	100.0	100.0	100
52	0	0.0	0.0	0.0	0.0	0.0	0.0	0.6	2.5	6.8	17.5	29.8	46.1	60.5	72.7	86.0	92.8	96.8	98.4	99.7	100.0	100.0	100.0	100.0	100
53	0	0.0	0.0	0.0	0.0	0.0	0.0	0.8	3.0	9.5	24.2	35.3	48.0	63.1	76.1	87.7	93.5	97.2	98.6	99.5	99.8	99.9	100.0	100.0	100
54	0	0.0	0.0	0.0	0.0	0.2	0.7	2.4	7.2	14.7	27.2	37.2	47.3	58.8	67.6	74.0	79.2	86.7	92.6	97.9	99.8	99.9	100.0	100.0	100
55	0	0.0	0.0	0.0	0.0	0.0	0.0	1.3	5.4	13.3	25.5	31.6	38.8	52.5	66.8	75.5	81.2	87.9	92.8	98.3	100.0	100.0	100.0	100.0	100
56	0	0.0	0.0	0.0	0.0	0.0	0.0	1.3	5.1	11.4	22.3	29.5	38.5	51.1	65.2	77.8	85.6	91.7	95.0	98.7	100.0	100.0	100.0	100.0	100
57	0	0.0	0.0	0.0	0.0	0.0	0.1	1.0	3.5	9.2	21.5	31.0	43.5	60.4	75.1	86.1	91.6	96.2	98.1	99.4	99.9	99.9	100.0	100.0	100
58	0	0.0	0.0	0.0	0.0	0.2	0.9	2.9	8.0	13.2	21.0	29.1	38.0	45.9	54.5	65.4	74.8	82.1	87.5	95.4	98.8	99.7	100.0	100.0	100
59	0	0.0	0.0	0.0	0.0	0.0	0.0	2.2	8.9	15.6	24.2	31.1	38.3	46.0	54.9	64.2	73.2	81.9	88.5	95.7	98.6	99.4	99.7	99.7	100
60	0	0.0	0.0	0.0	0.0	0.0	0.0	0.4	1.5	4.0	9.5	13.3	20.5	33.6	52.8	66.5	76.7	88.1	94.2	98.6	100.0	100.0	100.0	100.0	100
61	0	0.0	0.0	0.0	0.0	0.0	0.0	1.3	5.0	8.5	15.5	29.8	41.8	46.0	49.2	56.0	65.1	71.6	78.6	91.1	97.3	99.3	100.0	100.0	100
62	0	0.0	0.0	0.1	0.3	0.8	2.1	3.6	6.5	9.7	13.7	16.5	20.8	27.3	40.1	56.9	72.6	83.4	89.4	95.5	98.1	99.6	100.0	100.0	100
63	0	0.0	0.0	0.0	0.0	0.0	0.0	0.9	3.7	7.8	13.3	15.8	19.9	29.0	46.8	64.7	78.3	88.8	93.9	98.5	100.0	100.0	100.0	100.0	100
64	0	0.0	0.0	0.7	2.8	7.4	12.4	14.4	15.6	17.3	19.4	21.0	24.4	32.3	48.0	61.4	72.1	81.9	87.0	90.1	92.4	98.1	100.0	100.0	100
65	0	3.6	7.0	9.6	11.4	13.0	14.4	16.3	17.7	18.4	19.3	20.5	23.6	32.0	50.0	66.2	77.2	85.4	88.8	90.4	91.3	92.7	94.8	97.0	100
66	0	0.0	0.0	0.0	0.0	0.1	0.5	1.1	2.2	3.6	6.0	7.6	11.1	19.8	38.9	59.7	74.4	83.2	88.1	94.6	97.7	99.4	100.0	100.0	100
67	0	0.0	0.0	0.0	0.0	0.1	0.4	0.9	1.6	1.9	2.4	5.0	12.1	24.8	48.3	73.6	86.5	92.0	94.3	96.6	97.9	99.5	100.0	100.0	100
68	0	2.3	4.5	7.8	10.4	12.0	13.3	16.3	17.7	18.1	18.2	18.3	18.4	19.9	24.5	35.0	54.4	69.4	78.6	85.7	89.2	91.9	93.9	97.0	100
69	0	2.0	3.7	5.7	7.8	10.5	12.4	13.7	14.3	14.7	15.1	15.7	17.1	22.7	36.7	50.4	63.6	75.0	81.8	87.8	90.8	93.2	94.9	97.5	100
70	0	0.5	0.7	1.0	1.3	1.7	2.2	2.8	3.4	3.9	4.7	5.4	7.4	15.7	36.5	55.8	70.3	80.9	86.4	90.9	93.4	96.4	98.1	99.4	100
71	0	0.7	1.2	1.6	2.1	2.8	3.3	3.6	4.0	4.5	5.6	6.5	9.1	18.5	40.6	59.7	74.0	86.3	91.7	94.7	96.0	96.7	97.3	98.8	100
72	0	0.0	0.0	0.0	0.0	0.0	0.1	0.2	0.7	0.8	1.3	3.5	9.9	24.7	51.4	71.5	83.6	93.8	97.7	99.2	99.8	99.9	99.9	100.0	100
73	0	0.0	0.1	0.1	0.2	0.2	0.3	0.6	1.3	4.1	11.5	18.1	28.3	40.2	54.1	67.0	77.2	87.7	93.3	97.5	99.1	99.6	99.8	100.0	100
74	0	0.0	0.0	0.0	0.0	0.1	0.2	0.5	1.2	2.7	6.4	10.2	18.4	31.0	50.7	68.7	81.2	91.6	96.1	98.4	99.2	99.8	100.0	100.0	100
75	0	0.1	0.1	0.1	0.2	0.5	1.3	1.9	3.0	4.1	6.6	10.0	17.6	28.3	44.7	59.4	71.6	83.9	90.3	94.7	96.7	98.8	99.6	99.9	100

Month	Jan	Jan	Jan	Feb	Mar	Mar	Mar	Apr	Apr	May	May	Jun	Jun	Jul	Jul	Aug	Aug	Sept	Sept	Oct	Oct	Nov	Nov	Dec	Dec
Day	1	16	31	15	1	16	31	15	30	15	30	14	29	14	29	13	28	12	27	12	27	11	26	11	31
EI Zone																									
76	0	0.0	0.0	0.0	0.0	0.1	0.2	0.6	1.3	2.0	3.5	4.9	8.4	17.4	37.3	57.5	72.9	83.7	89.5	95.8	98.4	99.6	100.0	100.0	100
77	0	0.2	0.3	0.3	0.4	0.8	1.5	2.0	2.8	3.9	5.9	7.2	10.3	21.5	46.5	66.3	78.3	86.5	90.8	96.0	98.2	99.1	99.5	99.8	100
78	0	0.0	0.0	0.0	0.0	0.0	0.2	0.5	1.6	3.8	8.9	13.2	21.8	35.8	56.6	75.4	86.0	92.9	95.9	98.2	99.2	99.8	100.0	100.0	100
79	0	0.0	0.0	0.0	0.0	0.2	0.7	1.3	2.7	5.8	12.7	18.8	28.8	41.6	58.4	75.7	86.5	94.2	97.3	98.9	99.5	99.9	100.0	100.0	100
80	0	0.6	1.2	1.6	2.1	2.5	3.3	4.5	6.9	10.1	15.5	19.7	26.6	36.4	51.7	67.5	79.4	88.8	93.2	96.1	97.3	98.2	98.7	99.3	100
81	0	0.1	0.1	0.2	0.4	0.5	0.8	0.9	1.5	3.9	9.9	12.8	18.2	30.7	54.1	77.1	89.0	94.9	97.2	98.7	99.3	99.6	99.7	99.9	100
82	0	0.0	0.1	0.1	0.2	0.2	0.5	1.2	3.1	6.7	14.4	20.1	29.8	44.5	64.2	83.1	92.2	96.4	98.1	99.3	99.7	99.8	99.8	99.9	100
83	0	0.0	0.1	0.1	0.1	0.3	0.9	1.6	3.5	8.3	19.4	30.0	44.0	59.2	72.4	84.6	91.2	96.5	98.6	99.5	99.8	99.9	100.0	100.0	100
84	0	0.0	0.1	0.1	0.2	0.3	0.6	1.7	4.9	9.9	19.5	27.2	38.3	52.8	68.8	83.9	91.6	96.4	98.2	99.2	99.6	99.8	99.8	99.9	100
85	0	0.0	0.0	0.0	0.0	0.0	1.0	2.0	3.0	6.0	11.0	23.0	36.0	49.0	63.0	77.0	90.0	95.0	98.0	99.0	100.0	100.0	100.0	100.0	100
86	0	0.0	0.0	0.0	0.0	0.0	1.0	2.0	3.0	6.0	11.0	23.0	36.0	49.0	63.0	77.0	90.0	95.0	98.0	99.0	100.0	100.0	100.0	100.0	100
87	0	0.0	0.0	0.0	1.0	1.0	2.0	3.0	6.0	10.0	17.0	29.0	43.0	55.0	67.0	77.0	85.0	91.0	96.0	98.0	99.0	100.0	100.0	100.0	100
88	0	0.0	0.0	0.0	1.0	1.0	2.0	3.0	6.0	13.0	23.0	37.0	51.0	61.0	69.0	78.0	85.0	91.0	94.0	96.0	98.0	99.0	99.0	100.0	100
89	0	1.0	1.0	2.0	3.0	4.0	7.0	12.0	18.0	27.0	38.0	48.0	55.0	62.0	69.0	76.0	83.0	90.0	94.0	97.0	98.0	99.0	100.0	100.0	100
90	0	1.0	2.0	3.0	4.0	6.0	8.0	13.0	21.0	29.0	37.0	46.0	54.0	60.0	65.0	69.0	74.0	81.0	87.0	92.0	95.0	97.0	98.0	99.0	100
91	0	0.0	0.0	0.0	1.0	1.0	1.0	2.0	6.0	16.0	29.0	39.0	46.0	53.0	60.0	67.0	74.0	81.0	88.0	95.0	99.0	99.0	100.0	100.0	100
92	0	0.0	0.0	0.0	1.0	1.0	1.0	2.0	6.0	16.0	29.0	39.0	46.0	53.0	60.0	67.0	74.0	81.0	88.0	95.0	99.0	99.0	100.0	100.0	100
93	0	1.0	1.0	2.0	3.0	4.0	6.0	8.0	13.0	25.0	40.0	49.0	56.0	62.0	67.0	72.0	76.0	80.0	85.0	91.0	97.0	98.0	99.0	99.0	100
94	0	1.0	2.0	4.0	6.0	8.0	10.0	15.0	21.0	29.0	38.0	47.0	53.0	57.0	61.0	65.0	70.0	76.0	83.0	88.0	91.0	94.0	96.0	98.0	100
95	0	1.0	3.0	5.0	7.0	9.0	11.0	14.0	18.0	27.0	35.0	41.0	46.0	51.0	57.0	62.0	68.0	73.0	79.0	84.0	89.0	93.0	96.0	98.0	100
96	0	2.0	4.0	6.0	9.0	12.0	17.0	23.0	30.0	37.0	43.0	49.0	54.0	58.0	62.0	66.0	70.0	74.0	78.0	82.0	86.0	90.0	94.0	97.0	100
97	0	1.0	3.0	5.0	7.0	10.0	14.0	20.0	28.0	37.0	48.0	56.0	61.0	64.0	68.0	72.0	77.0	81.0	86.0	89.0	92.0	95.0	98.0	99.0	100
98	0	1.0	2.0	4.0	6.0	8.0	10.0	13.0	19.0	26.0	34.0	42.0	50.0	58.0	63.0	68.0	74.0	79.0	84.0	89.0	93.0	95.0	97.0	99.0	100
99	0	0.0	0.0	1.0	1.0	2.0	3.0	5.0	7.0	12.0	19.0	33.0	48.0	57.0	65.0	72.0	82.0	88.0	93.0	96.0	98.0	99.0	100.0	100.0	100
100	0	0.0	0.0	0.0	1.0	1.0	2.0	3.0	5.0	9.0	15.0	27.0	38.0	50.0	62.0	74.0	84.0	91.0	95.0	97.0	98.0	99.0	99.0	100.0	100
101	0	0.0	0.0	1.0	2.0	3.0	4.0	6.0	9.0	14.0	20.0	28.0	39.0	52.0	63.0	72.0	80.0	87.0	91.0	94.0	97.0	98.0	99.0	100.0	100
102	0	0.0	1.0	2.0	3.0	4.0	6.0	8.0	11.0	15.0	22.0	31.0	40.0	49.0	59.0	69.0	78.0	85.0	91.0	94.0	96.0	98.0	99.0	100.0	100
103	0	1.0	2.0	3.0	4.0	6.0	8.0	10.0	14.0	18.0	25.0	34.0	45.0	56.0	64.0	72.0	79.0	84.0	89.0	92.0	95.0	97.0	98.0	99.0	100
104	0	2.0	3.0	5.0	7.0	10.0	13.0	16.0	19.0	23.0	27.0	34.0	44.0	54.0	63.0	72.0	80.0	85.0	89.0	91.0	93.0	95.0	96.0	98.0	100
105	0	1.0	3.0	6.0	9.0	12.0	16.0	21.0	26.0	31.0	37.0	43.0	50.0	57.0	64.0	71.0	77.0	81.0	85.0	88.0	91.0	93.0	95.0	97.0	100
106	0	3.0	6.0	9.0	13.0	17.0	21.0	27.0	33.0	38.0	44.0	49.0	55.0	61.0	67.0	71.0	75.0	78.0	81.0	84.0	86.0	90.0	94.0	97.0	100
107	0	3.0	5.0	7.0	10.0	14.0	18.0	23.0	27.0	31.0	35.0	39.0	45.0	53.0	60.0	67.0	74.0	80.0	84.0	86.0	88.0	90.0	93.0	95.0	100
108	0	3.0	6.0	9.0	12.0	16.0	20.0	24.0	28.0	33.0	38.0	43.0	50.0	59.0	69.0	75.0	80.0	84.0	87.0	90.0	92.0	94.0	96.0	98.0	100
109	0	3.0	6.0	10.0	13.0	16.0	19.0	23.0	26.0	29.0	33.0	39.0	47.0	58.0	68.0	75.0	80.0	83.0	86.0	88.0	90.0	92.0	95.0	97.0	100
110	0	1.0	3.0	5.0	7.0	9.0	12.0	15.0	18.0	21.0	25.0	29.0	36.0	45.0	56.0	68.0	77.0	83.0	88.0	91.0	93.0	95.0	97.0	99.0	100
111	0	1.0	2.0	3.0	4.0	5.0	6.0	8.0	11.0	15.0	20.0	28.0	41.0	54.0	65.0	74.0	82.0	87.0	92.0	94.0	96.0	97.0	98.0	99.0	100
112	0	0.0	0.0	1.0	2.0	3.0	4.0	5.0	7.0	12.0	17.0	24.0	33.0	42.0	55.0	67.0	76.0	83.0	89.0	92.0	94.0	96.0	98.0	99.0	100
113	0	1.0	2.0	3.0	4.0	5.0	6.0	8.0	10.0	13.0	17.0	22.0	31.0	42.0	52.0	60.0	68.0	75.0	80.0	85.0	89.0	92.0	96.0	98.0	100
114	0	1.0	2.0	4.0	6.0	8.0	11.0	13.0	15.0	18.0	21.0	26.0	32.0	38.0	46.0	55.0	64.0	71.0	77.0	81.0	85.0	89.0	93.0	97.0	100
115	0	1.0	2.0	3.0	4.0	5.0	6.0	8.0	10.0	14.0	19.0	26.0	34.0	45.0	56.0	66.0	76.0	82.0	86.0	90.0	93.0	95.0	97.0	99.0	100

Month	Jan	Jan	Jan	Feb	Mar	Mar	Mar	Apr	Apr	May	May	Jun	Jun	Jul	Jul	Aug	Aug	Sept	Sept	Oct	Oct	Nov	Nov	Dec	Dec
Day	1	16	31	15	1	16	31	15	30	15	30	14	29	14	29	13	28	12	27	12	27	11	26	11	31
EI Zone																									
116	0	1.0	3.0	5.0	7.0	9.0	12.0	15.0	18.0	21.0	25.0	29.0	36.0	45.0	56.0	68.0	77.0	83.0	88.0	91.0	93.0	95.0	97.0	99.0	100
117	0	1.0	2.0	3.0	4.0	5.0	7.0	9.0	11.0	14.0	17.0	22.0	31.0	42.0	54.0	65.0	74.0	83.0	89.0	92.0	95.0	97.0	98.0	99.0	100
118	0	1.0	2.0	3.0	5.0	7.0	10.0	14.0	18.0	22.0	27.0	32.0	37.0	46.0	58.0	69.0	80.0	89.0	93.0	94.0	95.0	96.0	97.0	97.0	100
119	0	2.0	4.0	6.0	8.0	12.0	16.0	20.0	25.0	30.0	35.0	41.0	47.0	56.0	67.0	75.0	81.0	85.0	87.0	89.0	91.0	93.0	95.0	97.0	100
120	0	1.0	2.0	4.0	6.0	7.0	9.0	12.0	15.0	18.0	23.0	31.0	40.0	48.0	57.0	63.0	72.0	78.0	88.0	92.0	96.0	97.0	98.0	99.0	100
121	0	8.0	16.0	25.0	33.0	41.0	46.0	50.0	53.0	54.0	55.0	56.0	56.5	57.0	57.8	58.0	58.8	60.0	61.0	63.0	66.5	72.0	80.0	90.0	100
122	0	7.0	14.0	20.0	25.5	33.5	38.0	43.0	46.0	50.0	52.5	54.5	56.0	58.0	59.0	60.0	61.5	63.0	65.0	68.0	72.0	79.0	86.0	93.0	100
123	0	4.0	8.0	12.0	17.0	23.0	29.0	34.0	38.0	44.0	49.0	53.0	56.0	59.0	62.0	65.0	69.0	72.0	75.0	79.0	83.0	88.0	93.0	96.0	100
124	0	4.0	9.0	15.0	23.0	29.0	34.0	40.0	44.0	48.0	50.0	51.0	52.0	53.0	55.0	57.0	60.0	62.0	64.0	67.0	72.0	80.0	88.0	95.0	100
125	0	7.0	12.0	17.0	24.0	30.0	39.0	45.0	50.0	53.0	55.0	56.0	57.0	58.0	59.0	61.0	62.0	63.0	64.0	66.0	70.0	77.0	84.0	92.0	100
126	0	9.0	16.0	23.0	30.0	37.0	43.0	47.0	50.0	52.0	54.0	55.0	56.0	57.0	58.0	59.0	60.0	62.0	64.0	67.0	71.0	77.0	86.0	93.0	100
127	0	8.0	15.0	22.0	28.0	33.0	38.0	42.0	46.0	50.0	52.0	53.0	53.0	53.0	53.0	54.0	55.0	57.0	59.0	63.0	68.0	75.0	83.0	92.0	100
128	0	8.0	15.0	22.0	29.0	34.0	40.0	45.0	48.0	51.0	54.0	57.0	59.0	62.0	63.0	64.0	65.0	66.0	67.0	69.0	72.0	76.0	83.0	91.0	100
129	0	9.0	16.0	22.0	27.0	32.0	37.0	41.0	45.0	48.0	51.0	53.0	55.0	56.0	57.0	57.0	58.0	59.0	61.0	64.0	68.0	73.0	79.0	89.0	100
130	0	10.0	20.0	28.0	35.0	41.0	46.0	49.0	51.0	53.0	55.0	56.0	56.0	57.0	58.0	59.0	60.0	61.0	62.0	65.0	69.0	74.0	81.0	90.0	100
131	0	8.0	15.0	22.0	28.0	33.0	38.0	41.0	44.0	47.0	49.0	51.0	53.0	55.0	56.0	58.0	59.0	60.0	63.0	65.0	69.0	75.0	84.0	92.0	100
132	0	10.0	18.0	25.0	29.0	33.0	36.0	39.0	41.0	42.0	44.0	45.0	46.0	47.0	48.0	49.0	51.0	53.0	56.0	59.0	64.0	70.0	80.0	90.0	100
133	0	8.0	16.0	24.0	32.0	40.0	46.0	51.0	54.0	56.0	57.0	58.0	58.0	59.0	59.0	60.0	60.0	61.0	62.0	64.0	68.0	74.0	83.0	91.0	100
134	0	12.0	22.0	31.0	39.0	45.0	49.0	52.0	54.0	55.0	56.0	56.0	56.0	56.0	57.0	57.0	57.0	57.0	58.0	59.0	62.0	68.0	77.0	88.0	100
135	0	7.0	15.0	22.0	30.0	37.0	43.0	49.0	53.0	55.0	57.0	58.0	59.0	60.0	61.0	62.0	63.0	65.0	67.0	70.0	74.0	79.0	85.0	92.0	100
136	0	11.0	21.0	29.0	37.0	44.0	50.0	55.0	57.0	59.0	60.0	60.0	60.0	60.0	61.0	61.0	61.0	62.0	63.0	64.0	67.0	71.0	78.0	89.0	100
137	0	10.0	18.0	25.0	30.0	39.0	46.0	51.0	54.0	57.0	58.0	59.0	59.0	60.0	60.0	60.0	61.0	62.0	63.0	64.0	67.0	72.0	80.0	90.0	100
138	0	11.0	22.0	31.0	39.0	46.0	52.0	56.0	58.0	59.0	60.0	61.0	61.0	61.0	61.0	62.0	62.0	62.0	63.0	64.0	66.0	71.0	78.0	89.0	100
139	0	8.0	14.0	20.0	25.0	32.0	37.0	42.0	47.0	50.0	53.0	55.0	56.0	58.0	59.0	61.0	63.0	64.0	66.0	68.0	71.0	76.0	85.0	93.0	100
140	0	13.0	18.0	43.0	56.0	65.0	69.0	69.4	69.7	70.1	70.4	70.8	71.1	71.5	71.9	72.2	72.6	73.0	73.3	73.6	74.0	76.0	81.0	89.0	100

Soil Erodibility Factor (K)

The K factor can be determined by using the nomograph method, which requires that a particle size analysis (ASTM D-422) be done to determine the percentages of sand, very fine sand, silt and clay. Use the figure below to determine appropriate K value.

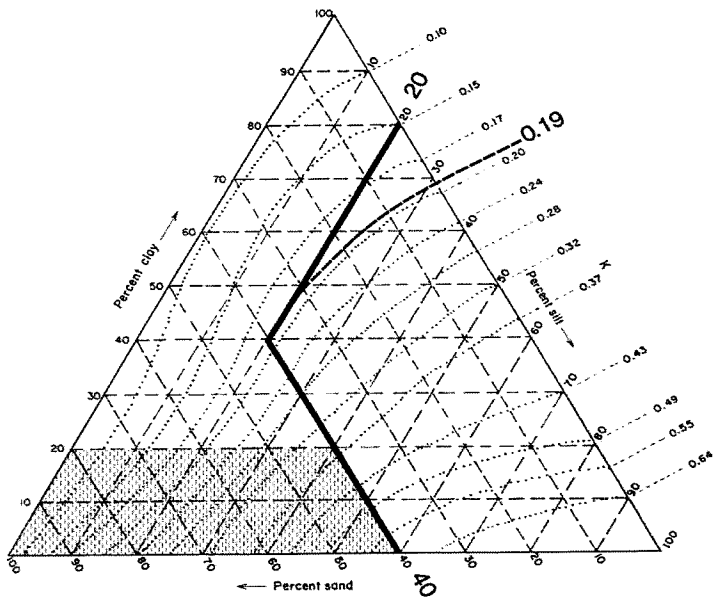

Erickson triangular nomograph used to estimate soil erodibility (K) factor.
The figure above is the USDA nomograph used to determine the K factor for a soil, based on its texture (% silt plus very fine sand, % sand, % organic matter, soil structure, and permeability). *Nomograph from Erickson 1977 as referenced in Goldman et. al., 1986.*

Sheet Flow Length (ft)	Average Watershed Slope (%) 0.2	0.5	1.0	2.0	3.0	4.0	5.0	6.0
<3	0.05	0.07	0.09	0.13	0.17	0.20	0.23	0.26
6	0.05	0.07	0.09	0.13	0.17	0.20	0.23	0.26
9	0.05	0.07	0.09	0.13	0.17	0.20	0.23	0.26
12	0.05	0.07	0.09	0.13	0.17	0.20	0.23	0.26
15	0.05	0.07	0.09	0.13	0.17	0.20	0.23	0.26
25	0.05	0.07	0.10	0.16	0.21	0.26	0.31	0.36
50	0.05	0.08	0.13	0.21	0.30	0.38	0.46	0.54
75	0.05	0.08	0.14	0.25	0.36	0.47	0.58	0.69
100	0.05	0.09	0.15	0.28	0.41	0.55	0.68	0.82
150	0.05	0.09	0.17	0.33	0.50	0.68	0.86	1.05
200	0.06	0.10	0.18	0.37	0.57	0.79	1.02	1.25
250	0.06	0.10	0.19	0.40	0.64	0.89	1.16	1.43
300	0.06	0.10	0.20	0.43	0.69	0.98	1.28	1.60
400	0.06	0.11	0.22	0.48	0.80	1.14	1.51	1.90
600	0.06	0.12	0.24	0.56	0.96	1.42	1.91	2.43
800	0.06	0.12	0.26	0.63	1.10	1.65	2.25	2.89
1000	0.06	0.13	0.27	0.69	1.23	1.86	2.55	3.30

LS Factors for Construction Sites. *Table from Renard et. al., 1997.*

8.0	10.0	12.0	14.0	16.0	20.0	25.0	30.0	40.0
0.32	0.35	0.36	0.38	0.39	0.41	0.45	0.48	0.53
0.32	0.37	0.41	0.45	0.49	0.56	0.64	0.72	0.85
0.32	0.38	0.45	0.51	0.56	0.67	0.80	0.91	1.13
0.32	0.39	0.47	0.55	0.62	0.76	0.93	1.08	1.37
0.32	0.40	0.49	0.58	0.67	0.84	1.04	1.24	1.59
0.45	0.57	0.71	0.85	0.98	1.24	1.56	1.86	2.41
0.70	0.91	1.15	1.40	1.64	2.10	2.67	3.22	4.24
0.91	1.20	1.54	1.87	2.21	2.86	3.67	4.44	5.89
1.10	1.46	1.88	2.31	2.73	3.57	4.59	5.58	7.44
1.43	1.92	2.51	3.09	3.68	4.85	6.30	7.70	10.35
1.72	2.34	3.07	3.81	4.56	6.04	7.88	9.67	13.07
1.99	2.72	3.60	4.48	5.37	7.16	9.38	11.55	15.67
2.24	3.09	4.09	5.11	6.15	8.23	10.81	13.35	18.17
2.70	3.75	5.01	6.30	7.60	10.24	13.53	16.77	22.95
3.52	4.95	6.67	8.45	10.26	13.94	18.57	23.14	31.89
4.24	6.03	8.17	10.40	12.69	17.35	23.24	29.07	40.29
4.91	7.02	9.57	12.23	14.96	20.57	27.66	34.71	48.29

50.0	**60.0**
0.58	0.63
0.97	1.07
1.31	1.47
1.62	1.84
1.91	2.19
2.91	3.36
5.16	5.97
7.20	8.37
9.13	10.63
12.75	14.89
16.16	18.92
19.42	22.78
22.57	26.51
28.60	33.67
39.95	47.18
50.63	59.93
60.84	72.15

Receiving Water (RW) Risk Factor Worksheet	Entry	Score
A. Watershed Characteristics	**yes/no**	
A.1. Does the disturbed area discharge (either directly or indirectly) to a **303(d)-listed waterbody impaired by sediment** (For help with impaired waterbodies please visit the link below) or has a **USEPA approved TMDL implementation plan for sediment**?: http://www.waterboards.ca.gov/water_issues/programs/tmdl/integrated2010.shtml **OR** A.2. Does the disturbed area discharge to a waterbody with designated beneficial uses of SPAWN & COLD & MIGRATORY? (For help please review the appropriate Regional Board Basin Plan) http://www.waterboards.ca.gov/waterboards_map.shtml	no	Low
Region 1 Basin Plan Region 2 Basin Plan Region 3 Basin Plan Region 4 Basin Plan Region 5 Basin Plan Region 6 Basin Plan Region 7 Basin Plan Region 8 Basin Plan Region 9 Basin Plan		

2010 Integrated Report (Clean Water Act Section 303(d) List / 305(b) Report) — Statewide

PROPOSED 2010 CLEAN WATER ACT SECTION 303(d) LIST - STATEWIDE

Section 303(d) of the Clean Water Act requires the identification of waterbodies that do not meet, or are not expected to meet, water quality standards (i.e., impaired waterbodies). The affected waterbody, and associated pollutant or stressor, is then prioritized in the 303(d) List. The Clean Water Act further requires the development of a Total Maximum Daily Load (TMDL) for each listing. The current list, approved by the EPA, is the 2006 303(d) List. The Water Quality Control Policy for Developing California's Clean Water Act Section 303(d) List (Listing Policy) describes the requirements for developing the 303(d) list in California.

In addition to the impaired waterbody list required by Clean Water Act Section 303(d), Clean Water Act section 305(b) requires states to develop a report assessing statewide surface water quality. Both Clean Water Act requirements are being addressed through the 2010 CWA 303(d)/305 (b) Integrated Report which will address both an update to the 303(d) list and a 305(b) assessment of statewide water quality. (See "2010 Integrated Report" tab)

In California, the 303(d) list is made up of three of the Integrated Report categories, 4a, 4b, and 5. These categories contain water bodies that have listed pollutants that are still requiring the development of a TMDL, or are being addressed by a USEPA approved TMDL or an action other than a TMDL. Below are the Integrated Report Category Reports that make up the 303(d) list and the Factsheets that contain the supporting information for listing decisions:

303(d) Category Lists:

Category 4a
Category 4b
Category 5

Supporting Information:

Comprehensive Report — supporting information detailing all assessment decisions

PROPOSED 2006 CWA SECTION 303(d) LIST OF WATER QUALITY LIMITED SEGMENTS

LOS ANGELES REGIONAL BOARD

SWRCB APPROVAL DATE: OCTOBER 25, 2006

REGION	TYPE	NAME	CALWATER WATERSHED	POLLUTANT/STRESSOR	POTENTIAL SOURCES	ESTIMATED SIZE AFFECTED	PROPOSED TMDL COMPLETION
				Sediment Toxicity	Source Unknown	6.7 Miles	2019
				Zinc (sediment)	Nonpoint/Point Source	6.7 Miles	2019
4	E	Dominguez Channel Estuary (unlined portion below Vermont Ave)	40512000				
				Ammonia	Nonpoint/Point Source	140 Acres	2019
				Benthic Community Effects	Nonpoint/Point Source	140 Acres	2019
				Benzo(a)pyrene (PAHs)	Source Unknown	140 Acres	2019
				Benzo[a]anthracene	Source Unknown	140 Acres	2019
				Chlordane (tissue)	Nonpoint/Point Source	140 Acres	2019
				Chrysene (C1-C4)	Source Unknown	140 Acres	2019
				Coliform Bacteria	Nonpoint/Point Source	140 Acres	2007
				DDT (tissue & sediment)	Nonpoint/Point Source	140 Acres	2019
				Dieldrin (tissue)	Nonpoint/Point Source	140 Acres	2019

PROPOSED 2006 CWA SECTION 303(d) LIST OF WATER QUALITY LIMITED SEGMENTS

LOS ANGELES REGIONAL BOARD

SWRCB APPROVAL DATE: OCTOBER 25, 2006

REGION	TYPE	NAME	CALWATER WATERSHED	POLLUTANT/STRESSOR	POTENTIAL SOURCES	ESTIMATED SIZE AFFECTED	PROPOSED TMDL COMPLETION
				Lead (tissue)	Nonpoint/Point Source	140 Acres	2019
				PCBs (Polychlorinated biphenyls)	Source Unknown	140 Acres	2019
				Phenanthrene	Source Unknown	140 Acres	2019
				Pyrene	Source Unknown	140 Acres	2019
				Zinc (sediment)	Nonpoint/Point Source	140 Acres	2019
4	R	Dry Canyon Creek	40521000	Fecal Coliform	Urban Runoff/Storm Sewers Natural Sources	3.9 Miles	2009
4	L	Echo Park Lake	40515010	Algae	Nonpoint Source	13 Acres	2019
				Ammonia	Nonpoint Source	13 Acres	2019
				Copper	Nonpoint Source	13 Acres	2019
				Eutrophic	Nonpoint Source	13 Acres	2019
				Lead	Nonpoint Source	13 Acres	2019

Statewide | **CATEGORY 5** | *Final 2010 Integrated Report (CWA Section 303(d) List / 305(b) Report)*

USEPA Final Approval: October 11, 2011

2010 CALIFORNIA 303(d) LIST OF WATER QUALITY LIMITED SEGMENTS*

Category 5 criteria: 1) A water segment where standards are not met and a TMDL is required, but not yet completed, for at least one of the pollutants being listed for this segment.

* USGS HUC = US Geological Survey Hydrologic Unit Code. Calwater = State Water Resources Control Board hydrological subunit area or even smaller planning watershed.

** TMDL requirement status definitions for listed pollutants are: A= TMDL still required, B= being addressed by USEPA approved TMDL, C= being addressed by action other than a TMDL

*** Dates relate to the TMDL requirement status, so a date for A= TMDL scheduled completion date, B= Date USEPA approved TMDL, and C= Completion date for action other than a TMDL

REGION	WATER BODY NAME	WATER TYPE	WATERSHED* CALWATER / USGS HUC	• POLLUTANT ◦ POTENTIAL SOURCES *Relevant Notes*	ESTIMATED AREA ASSESSED	FIRST YEAR LISTED	TMDL REQUIREMENT STATUS**	DATE***
1	Bodega HU, Bodega Harbor HA	Bay & Harbor	11522000 / 18010111	• Invasive Species ◦ Source Unknown	810 Acres	2006	5A	2019
1	Bodega HU, Estero Americano HA, Americano Creek	River & Stream	11530000 / 18010111	• Nutrients ◦ Dairies ◦ Intensive Animal Feeding Operations ◦ Manure Lagoons ◦ Pasture Grazing-Riparian ◦ Range Grazing-Riparian ◦ Range Grazing-Upland *The Bodega HU, Estero Americano HA, Americano Creek includes the following Calwater Super Planning Watersheds (SPWs): 115.30010 and 115.30011. A Water Quality Attainment Strategy is attempting to increase voluntary measures for attainment of standards & objectives, as was done in the Estero de San Antonio/Stemple Creek TMDL Water Quality Attainment Strategy, adopted by North Coast RWQCB in December 1997.*	38 Miles	1996	5A	2019
1	Bodega HU, Estero Americano HA, estuary	Estuary	11530012 / 18010111	• Nutrients ◦ Manure Lagoons ◦ Range Grazing-Riparian and/or Upland *The Bodega HU, Estero Americano HA, Americano Creek includes the following Calwater Super Planning Watersheds (SPWs): 115.30010 and 115.30011. A Water Quality Attainment Strategy is attempting to increase voluntary measures for attainment of standards & objectives, as was done in the Estero de San Antonio/Stemple Creek TMDL Water Quality Attainment Strategy, adopted by North Coast RWQCB in December 1997.*	199 Acres	1996	5A	2019
				• Sedimentation/Siltation ◦ Erosion/Siltation ◦ Hydromodification ◦ Nonpoint Source ◦ Range Grazing-Riparian ◦ Removal of Riparian Vegetation ◦ Streambank Modification/Destabilization *A Water Quality Attainment Strategy is attempting to increase voluntary measures for attainment of standards & objectives, as was done in the Estero de San Antonio/Stemple Creek TMDL Water Quality Attainment Strategy, adopted by North Coast RWQCB in December 1997.*	199 Acres	1992	5A	2019
1	Campbell Cove	Coastal & Bay Shoreline	11522000 / 18010111	• Indicator Bacteria ◦ Source Unknown	0.22 Miles	2006	5A	2019
1	Clam Beach	Coastal & Bay Shoreline	10820012 / 18010102	• Indicator Bacteria ◦ Source Unknown	1.3 Miles	2006	5A	2019

REGION	WATER BODY NAME	WATER TYPE	WATERSHED* CALWATER / USGS HUC	• POLLUTANT ◦ POTENTIAL SOURCES *Relevant Notes*	ESTIMATED AREA ASSESSED	FIRST YEAR LISTED	TMDL REQUIREMENT STATUS**	DATE***
4	Coyote Creek	River & Stream	40515010 / 18070104	• Ammonia ◦ Point Source	13 Miles	1996	5C	
				• Copper, Dissolved ◦ Source Unknown	13 Miles	2002	5B	2007
				• Diazinon ◦ Source Unknown	13 Miles	2006	5A	2019
				• Indicator Bacteria ◦ Source Unknown	13 Miles	1996	5A	2009
				• Lead ◦ Major Municipal Point Source -wet weather discharge	13 Miles	2002	5B	2007
				• Toxicity ◦ Point Source *This listing was made by USEPA for 2002.*	13 Miles	2002	5A	2008
				• pH ◦ Source Unknown	13 Miles	2006	5A	2019
4	Coyote Creek, North Fork	River & Stream	40515010 / 18070104	• Indicator Bacteria ◦ Source Unknown	5 Miles	2010	5A	2021
				• Selenium ◦ Source Unknown	5 Miles	2010	5A	2021
4	Crystal Lake	Lake & Reservoir	40543000 / 18070106	• Organic Enrichment/Low Dissolved Oxygen ◦ Nonpoint Source	3.7 Acres	1998	5A	2019
4	Dominguez Channel (lined portion above Vermont Ave)	River & Stream	40351000 / 18070104	• Ammonia ◦ Nonpoint Source ◦ Point Source	6.7 Miles	1996	5A	2019
				• Copper ◦ Nonpoint Source ◦ Point Source	6.7 Miles	1996	5A	2019
				• Diazinon ◦ Source Unknown	6.7 Miles	2010	5A	2021
				• Indicator Bacteria ◦ Nonpoint Source ◦ Point Source	6.7 Miles	2006	5A	2007
				• Lead ◦ Nonpoint Source ◦ Point Source	6.7 Miles	1800	5A	2019
				• Toxicity ◦ Nonpoint Source ◦ Point Source	6.7 Miles	2010	5A	2021
				• Zinc ◦ Nonpoint Source ◦ Point Source	6.7 Miles	1800	5A	2019
4	Dominguez Channel Estuary (unlined	Estuary	40512000 / 18070104	• Ammonia ◦ Nonpoint Source ◦ Point Source	140 Acres	1996	5A	2019

REGION	WATER BODY NAME	WATER TYPE	WATERSHED* CALWATER / USGS HUC	• POLLUTANT ◦ POTENTIAL SOURCES *Relevant Notes*	ESTIMATED AREA ASSESSED	FIRST YEAR LISTED	TMDL REQUIREMENT STATUS**	DATE***
	portion below Vermont Ave)							
				• Benthic Community Effects ◦ Nonpoint Source ◦ Point Source	140 Acres	1996	5A	2019
				• Benzo(a)pyrene (3,4-Benzopyrene - 7-d) ◦ Source Unknown	140 Acres	1996	5A	2019
				• Benzo[a]anthracene ◦ Source Unknown	140 Acres	2006	5A	2019
				• Chlordane (tissue) ◦ Nonpoint Source ◦ Point Source	140 Acres	1998	5A	2019
				• Chrysene (C1-C4) ◦ Source Unknown	140 Acres	2006	5A	2019
				• Coliform Bacteria ◦ Nonpoint Source ◦ Point Source	140 Acres	2002	5A	2007
				• DDT (tissue & sediment) ◦ Nonpoint Source ◦ Point Source	140 Acres	1996	5A	2019
				• Dieldrin (tissue) ◦ Nonpoint Source ◦ Point Source	140 Acres	1998	5A	2019
				• Lead (tissue) ◦ Nonpoint Source ◦ Point Source	140 Acres	1996	5A	2019
				• PCBs (Polychlorinated biphenyls) ◦ Source Unknown	140 Acres	1996	5A	2019
				• Phenanthrene ◦ Source Unknown	140 Acres	2006	5A	2019
				• Pyrene ◦ Source Unknown	140 Acres	2006	5A	2019
				• Sediment Toxicity ◦ Atmospheric Deposition ◦ Nonpoint Source ◦ Surface Runoff ◦ Urban Runoff/Storm Sewers	140 Acres	2010	5A	2021
				• Zinc (sediment) ◦ Nonpoint Source ◦ Point Source	140 Acres	1996	5A	2019
4	Dry Canyon Creek	River & Stream	40521000 / 18070104	• Fecal Coliform ◦ Natural Sources ◦ Urban Runoff/Storm Sewers	3.9 Miles	2002	5A	2009
				• Selenium, Total ◦ Nonpoint Source	3.9 Miles	2002	5B	2005
4	Echo Park Lake	Lake & Reservoir	40515010 / 18070104	• Algae ◦ Nonpoint Source	13 Acres	1996	5A	2019
				• Ammonia	13 Acres	1996	5A	2019

Table 2-1. Beneficial Uses of Inland Surface Waters (Continued).

WATERSHED[a]	WBD No.	MUN	IND	PROC	AGR	GWR	FRSH	NAV	POW	COMM	AQUA	WARM	COLD	SAL	EST	MAR	WILD	BIOL	RARE	MIGR	SPWN	SHELL	WET[b]
DOMINGUEZ CHANNEL WATERSHED																							
Dominguez Channel Estuary (Ends at Vermont Ave.) [c,w]	180701060102							P		E					E	E	E		Ee	Ef	Ef		
Dominguez Channel (Estuary to 135th St.)	180701060102	P*										P					P		E				
Dominguez Channel (above 135th St)	180701060101	P*										P					P		E				
LOS ANGELES RIVER WATERSHED																							
Los Angeles River Estuary (Ends at Willow St.) [c,w]	180701050402		E					E		E					E	E	E		Ee	Ef	Ef	P	E
Los Angeles River Reach 1 (Estuary to Carson St.)	180701050402	P*	P	P		E						E				E	E		E	P	P	Ps	
Compton Creek	180701050402	P*				E						E					E						E
Los Angeles River Reach 2 (Carson St. to Rio Hondo Reach 1)	180701050402	P*	P			E						E					P						
Los Angeles River Reach 2 (Rio Hondo Reach 1 to Figueroa St.)	180701050401	P*	P			E						E					P						
Rio Hondo Reach 1 (Los Angeles River Reach 2 to Santa Ana Freeway)	180701050303	P*				I						P					I						
Rio Hondo Reach 2 (Santa Ana Freeway to Whittier Narrows Dam)	180701050303	P*				I						P					I						
Rio Hondo Reach 3 (above Whittier Narrows Dam)	180701050302	P*				I						P					I		E				E
Alhambra Wash	180701050303	P*				I						P					P		E				
Rubio Wash	180701050303	P*				I						I					E		P				
Rubio Canyon	180701050301	P*				E						I					E		E				E
Eaton Wash	180701050301	P*				I						I					E						
Eaton Wash (below dam) (Rio Hondo Reach 3 to Eaton Dam)	180701050301	P*				I						I					E						
Eaton Wash (above dam) (Eaton Dam to Mount Wilson Toll Rd.)	180701050301	P*				I						I					E						
Eaton Reservoir	180701050301	P*				I						I					E						
Eaton Canyon Creek (above Mount Wilson Toll Rd.)	180701050301	P*				E						E					E		E		E		E
Arcadia Wash	180701050302	P*				I						P					P						
Arcadia Wash	180701050302	P*				I						P					P						
Santa Anita Wash (lower) (Rio Hondo Reach 3 to Elkins Ave.)	180701050302	P*				I						P					P		E				
Santa Anita Wash (upper) (Elkins Ave. to Big Santa Anita Reservoir)	180701050302	P*				E						E					E		E				
Little Santa Anita Canyon Creek	180701050302	P*				I						I					E						
Big Santa Anita Reservoir	180701050302	P*				E						E	E				E						
Santa Anita Canyon Creek	180701050302	E*				E						E	E				E		E		E		E
Winter Creek	180701050302	P*				I						I					E						E
East Fork Santa Anita Canyon	180701050302	P*				E						E	E				E				E		E
Sawpit Wash	180701050302	I				I						I					E						
Sawpit Canyon Creek	180701050302	P*				I						I					E		E				
Sawpit Reservoir	180701050302	P*				I						I					E						
Monrovia Canyon Creek	180701050302	I				I						I					E						E
Arroyo Seco Reach 1 (Los Angeles River Reach 2 to Holly St.)	180701050209	P*										P					P						
Arroyo Seco Reach 2 (Holly St. to Devils Gate Dam)	180701050209	P*										P					P		E				
Devils Gate Reservoir (lower)	180701050209	P*				I						I					E						
Devils Gate Reservoir (upper)	180701050209	I*				I						I					E						
Arroyo Seco Reach 3 (above Devils Gate Dam)	180701050209	E	E	E		E						E	E				E						E
Millard Canyon Creek	180701050209	E*	E	E		E						E					E		E				E
El Prieto Canyon Creek	180701050209	I	I	I		I						I					E						
Little Bear Canyon Creek	180701050209	P*				I						I	I				E						E
Los Angeles River Reach 3 (Figueroa St. to Riverside Dr.)	180701050402	P*	P			E						E					E						E
Verdugo Wash Reach 1 (Los Angeles River Rch 3 to Verdugo Rd./Towne St.)	180701050207	P*				I						P					P						
Verdugo Wash Reach 2 (above Verdugo Rd. @ Towne St.)	180701050207	P*				I						P					P						
Halls Canyon Channel	180701050207	P*	I	I		I						I					E						
Snover Canyon	180701050207	I	I	I		I						I					E						
Pickens Canyon	180701050207	I*				I						I					E						
Shields Canyon	180701050207	I	I	I		I						I					E						

E: Existing beneficial use
P: Potential beneficial use
I: Intermittent beneficial use
E,P, and I: shall be protected as required.
* Asterisked MUN designations are designated under SB 88-63 and RB 89-03. Some designations may be considered for exemption at a later date (See pages 2-3, 4 for more details).

Footnotes are consistent for all beneficial use tables.
a: Waterbodies are listed multiple times if they cross hydrologic area or subarea boundaries. Beneficial use designations apply to all tributaries to the indicated waterbody, if not listed separately.
b: Waterbodies designated as WET may have wetlands habitat associated with only a portion of the waterbody. Any regulatory action would require a detailed analysis of the area.
c: Coastal waterbodies which are also listed in Coastal Features Table (2-3) or in Wetlands Table (2-4).
e: One or more rare species utilizes all ocean, bays, estuaries, and coastal wetlands for foraging and/or nesting.
f:Aquatic organisms utilize all bays, estuaries, lagoons, and coastal wetlands, to a certain extent, for spawning and early development. This may include migration into areas which are heavily influenced by freshwater inputs.
s: Access prohibited by Los Angeles County Department of Public Works.
w: These areas are engineered channels. All references to Tidal Prisms in Regional Board documents are functionally equivalent to estuaries.

SWPPP Amendment No.

_____

Project Name: _____

Project Number: _____

Qualified SWPPP Developer's Certification of the Stormwater Pollution Prevention Plan Amendment

"This Stormwater Pollution Prevention Plan and attachments were prepared under my direction to meet the requirements of the California Construction General Permit (SWRCB Order No. 2009-009-DWQ as amended by 2010-0014-DWQ and 2012-00xx-DWQ). I certify that I am a Qualified SWPPP Developer in good standing as of the date signed below."

QSD's Signature	Date
QSD Name	QSD Certificate Number
Title and Affiliation	Telephone
Address	Email

Appendix D: SWPPP Amendment Certifications

Appendix E: Submitted Changes to PRDs

Log of Updated PRDs

The General Permit allows for the reduction or increase of the total acreage covered under the General Permit when a portion of the project is complete and/or conditions for termination of coverage have been met; when ownership of a portion of the project is purchased by a different entity; or when new acreage is added to the project.

Modified PRDs shall be filed electronically within 30 days of a reduction or increase in total disturbed area if a change in permit covered acreage is to be sought. The SWPPP shall be modified appropriately, with revisions and amendments recorded in Appendix C. Updated PRDs submitted electronically via SMARTS can be found in this Appendix.

This appendix includes all of the following updated PRDs (check all that apply):

☐ Revised Notice of Intent (NOI);

☐ Revised Site Map;

☐ Revised Risk Assessment;

☐ New landowner's information (name, address, phone number, email address); and

☐ New signed certification statement.

_____
Legally Responsible Person [if organization]

Signature of [Authorized Representative of] Legally Responsible Person or Approved Signatory	Date
Name of [Authorized Representative of] Legally Responsible Person or Approved Signatory	Telephone Number

Appendix F: Construction Schedule

Appendix G: Construction Activities, Materials Used, and Associated Pollutants

Table G.a POLLUTANTS ASSOCIATED WITH CONSTRUCTION ACTIVITIES

General Work Activity/ Products With Potential Stormwater Pollutants	Specific Work Activity/Products With Potential Stormwater Pollutants	Pollutant Categories
Adhesives	• Adhesives, glues, resins, epoxy synthetics, PVC cement • Caulks, sealers, putty, sealing agents and • Coal tars (naphtha, pitch)	Oil and Grease, Synthetic Organics[1]
Asphalt paving/curbs	• Hot and cold mix asphalt	Oil and Grease
Cleaners	• Polishes (metal, ceramic, tile) • Etching agents • Cleaners, ammonia, lye, caustic sodas, bleaching agents and chromate salts	Metals, Synthetic Organics
Concrete / Masonry	• Cement and brick dust • Colored chalks • Concrete curing compounds • Glazing compounds • Surfaces cleaners • Saw cut slurries • Tile cutting	Metals, Synthetic Organics
Drywall	• Saw-cutting drywall	Metals
Framing/Carpentry	• Sawdust, particle board dust, and treated woods • Saw cut slurries	Metals, Synthetic Organics
Heating, Ventilation, Air Conditioning	• Demolition or construction of air condition and heating systems	Metals, Synthetic Organics
Insulation	• Demolition or construction involving insulation, venting systems	Metals, Synthetic Organics
Liquid waste	• Wash waters • Irrigation line testing/flushing	Metals, Synthetic Organics
Painting	• Paint thinners, acetone, methyl ethyl ketone, stripper paints, lacquers, varnish, enamels, turpentine, gum spirit, solvents, dyes, stripping pigments and sanding	Metals, Synthetic Organics
Planting / Vegetation Management	• Vegetation control (pesticides/herbicides) • Planting • Plant maintenance • Vegetation removal	Nutrients, Metals, Synthetic Organics
Plumbing	• Solder (lead, tin), flux (zinc chloride), pipe fitting • Galvanized metal in nails, fences, and electric wiring	Metals, Synthetic Organics
Pools/fountains	• Chlorinated water	Synthetic Organics
Removal of existing structures	• Demolition of asphalt, concrete, masonry, framing, roofing, metal structures.	Metals, Oil and Grease, Synthetic Organics
Roofing	• Flashing • Saw cut slurries (tile cutting) • Shingle scrap and debris	Metals, Oil and Grease, Synthetic Organics

Table G.a POLLUTANTS ASSOCIATED WITH CONSTRUCTION ACTIVITIES

General Work Activity/ Products With Potential Stormwater Pollutants	Specific Work Activity/Products With Potential Stormwater Pollutants	Pollutant Categories
Sanitary waste	• Portable toilets • Disturbance of existing sewer lines.	Nutrients
Soil preparation/amendments	• Use of soil additives/amendments	Nutrients
Solid waste	• Litter, trash and debris • Vegetation	Gross Pollutants
Utility line testing and flushing	• Hydrostatic test water • Pipe flushing	Synthetic Organics
Vehicle and equipment use	• Equipment operation • Equipment maintenance • Equipment washing • Equipment fueling	Oil and Grease

[1] Synthetic Organics are defined in Table 1.2 of the CASQA *Stormwater BMP Handbook Portal: Construction* as adhesives, cleaners, sealants, solvents, etc. These are generally categorized as VOCs or SVOCs.

Appendix H: CASQA Stormwater BMP Handbook Portal: Construction Fact Sheets

Scheduling EC-1

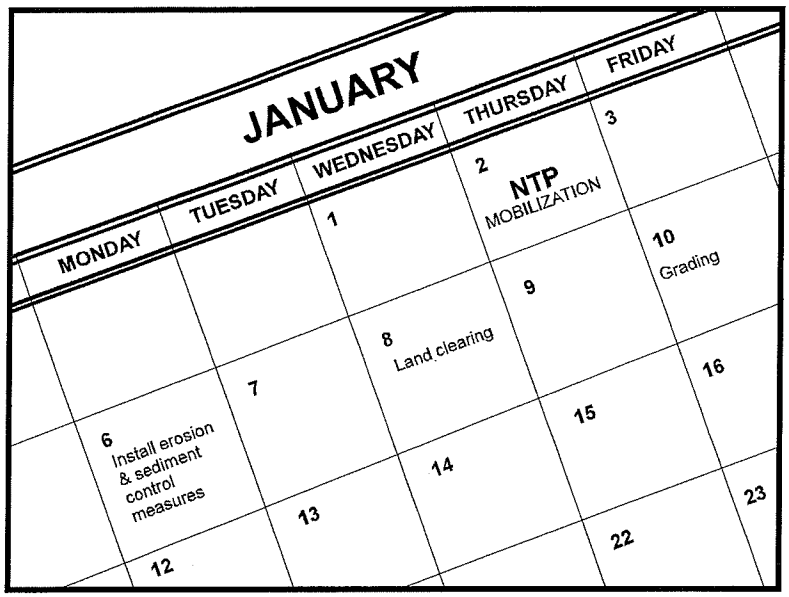

Description and Purpose

Scheduling is the development of a written plan that includes sequencing of construction activities and the implementation of BMPs such as erosion control and sediment control while taking local climate (rainfall, wind, etc.) into consideration. The purpose is to reduce the amount and duration of soil exposed to erosion by wind, rain, runoff, and vehicle tracking, and to perform the construction activities and control practices in accordance with the planned schedule.

Suitable Applications

Proper sequencing of construction activities to reduce erosion potential should be incorporated into the schedule of every construction project especially during rainy season. Use of other, more costly yet less effective, erosion and sediment control BMPs may often be reduced through proper construction sequencing.

Limitations

- Environmental constraints such as nesting season prohibitions reduce the full capabilities of this BMP.

Implementation

- Avoid rainy periods. Schedule major grading operations during dry months when practical. Allow enough time before rainfall begins to stabilize the soil with vegetation or physical means or to install sediment trapping devices.
- Plan the project and develop a schedule showing each phase of construction. Clearly show how the rainy season relates

Categories

EC	Erosion Control	☑
SE	Sediment Control	☒
TC	Tracking Control	☒
WE	Wind Erosion Control	☒
NS	Non-Stormwater Management Control	
WM	Waste Management and Materials Pollution Control	

Legend:

☑ **Primary Objective**

☒ **Secondary Objective**

Targeted Constituents

Sediment	☑
Nutrients	
Trash	
Metals	
Bacteria	
Oil and Grease	
Organics	

Potential Alternatives

None

If User/Subscriber modifies this fact sheet in any way, the CASQA name/logo and footer below must be removed from each page and not appear on the modified version.

to soil disturbing and re-stabilization activities. Incorporate the construction schedule into the SWPPP.

- Include on the schedule, details on the rainy season implementation and deployment of:
  - Erosion control BMPs
  - Sediment control BMPs
  - Tracking control BMPs
  - Wind erosion control BMPs
  - Non-stormwater BMPs
  - Waste management and materials pollution control BMPs
- Include dates for activities that may require non-stormwater discharges such as dewatering, sawcutting, grinding, drilling, boring, crushing, blasting, painting, hydro-demolition, mortar mixing, pavement cleaning, etc.
- Work out the sequencing and timetable for the start and completion of each item such as site clearing and grubbing, grading, excavation, paving, foundation pouring utilities installation, etc., to minimize the active construction area during the rainy season.
  - Sequence trenching activities so that most open portions are closed before new trenching begins.
  - Incorporate staged seeding and re-vegetation of graded slopes as work progresses.
  - Schedule establishment of permanent vegetation during appropriate planting time for specified vegetation.
- Non-active areas should be stabilized as soon as practical after the cessation of soil disturbing activities or one day prior to the onset of precipitation.
- Monitor the weather forecast for rainfall.
- When rainfall is predicted, adjust the construction schedule to allow the implementation of soil stabilization and sediment treatment controls on all disturbed areas prior to the onset of rain.
- Be prepared year round to deploy erosion control and sediment control BMPs. Erosion may be caused during dry seasons by un-seasonal rainfall, wind, and vehicle tracking. Keep the site stabilized year round, and retain and maintain rainy season sediment trapping devices in operational condition.
- Apply permanent erosion control to areas deemed substantially complete during the project's defined seeding window.

Costs

Construction scheduling to reduce erosion may increase other construction costs due to reduced economies of scale in performing site grading. The cost effectiveness of scheduling techniques should be compared with the other less effective erosion and sedimentation controls to achieve a cost effective balance.

Inspection and Maintenance

- Verify that work is progressing in accordance with the schedule. If progress deviates, take corrective actions.
- Amend the schedule when changes are warranted.
- Amend the schedule prior to the rainy season to show updated information on the deployment and implementation of construction site BMPs.

References

Stormwater Quality Handbooks Construction Site Best Management Practices (BMPs) Manual, State of California Department of Transportation (Caltrans), November 2000.

Stormwater Management for Construction Activities Developing Pollution Prevention Plans and Best Management Practices (EPA 832-R-92-005), U.S. Environmental Protection Agency, Office of Water, September 1992.

Preservation Of Existing Vegetation EC-2

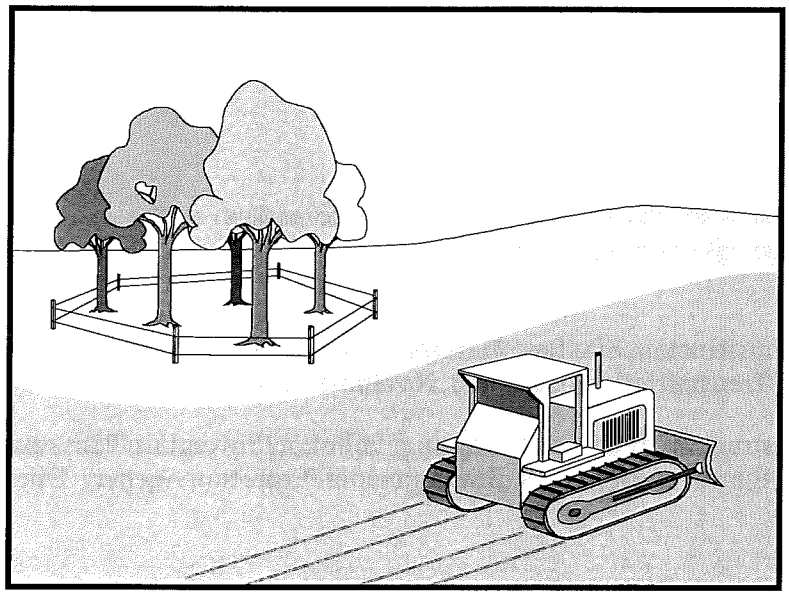

Categories

EC	Erosion Control	☑
SE	Sediment Control	
TC	Tracking Control	
WE	Wind Erosion Control	
NS	Non-Stormwater Management Control	
WM	Waste Management and Materials Pollution Control	

Legend:

☑ **Primary Objective**

☒ **Secondary Objective**

Targeted Constituents

Sediment	☑
Nutrients	
Trash	
Metals	
Bacteria	
Oil and Grease	
Organics	

Potential Alternatives

None

If User/Subscriber modifies this fact sheet in any way, the CASQA name/logo and footer below must be removed from each page and not appear on the modified version.

Description and Purpose

Carefully planned preservation of existing vegetation minimizes the potential of removing or injuring existing trees, vines, shrubs, and grasses that protect soil from erosion.

Suitable Applications

Preservation of existing vegetation is suitable for use on most projects. Large project sites often provide the greatest opportunity for use of this BMP. Suitable applications include the following:

- Areas within the site where no construction activity occurs, or occurs at a later date. This BMP is especially suitable to multi year projects where grading can be phased.
- Areas where natural vegetation exists and is designated for preservation. Such areas often include steep slopes, watercourse, and building sites in wooded areas.
- Areas where local, state, and federal government require preservation, such as vernal pools, wetlands, marshes, certain oak trees, etc. These areas are usually designated on the plans, or in the specifications, permits, or environmental documents.
- Where vegetation designated for ultimate removal can be temporarily preserved and be utilized for erosion control and sediment control.

CASQA
CALIFORNIA STORMWATER QUALITY ASSOCIATION

Limitations

- Requires forward planning by the owner/developer, contractor, and design staff.
- Limited opportunities for use when project plans do not incorporate existing vegetation into the site design.
- For sites with diverse topography, it is often difficult and expensive to save existing trees while grading the site satisfactory for the planned development.

Implementation

The best way to prevent erosion is to not disturb the land. In order to reduce the impacts of new development and redevelopment, projects may be designed to avoid disturbing land in sensitive areas of the site (e.g., natural watercourses, steep slopes), and to incorporate unique or desirable existing vegetation into the site's landscaping plan. Clearly marking and leaving a buffer area around these unique areas during construction will help to preserve these areas as well as take advantage of natural erosion prevention and sediment trapping.

Existing vegetation to be preserved on the site must be protected from mechanical and other injury while the land is being developed. The purpose of protecting existing vegetation is to ensure the survival of desirable vegetation for shade, beautification, and erosion control. Mature vegetation has extensive root systems that help to hold soil in place, thus reducing erosion. In addition, vegetation helps keep soil from drying rapidly and becoming susceptible to erosion. To effectively save existing vegetation, no disturbances of any kind should be allowed within a defined area around the vegetation. For trees, no construction activity should occur within the drip line of the tree.

Timing

- Provide for preservation of existing vegetation prior to the commencement of clearing and grubbing operations or other soil disturbing activities in areas where no construction activity is planned or will occur at a later date.

Design and Layout

- Mark areas to be preserved with temporary fencing. Include sufficient setback to protect roots.
  - Orange colored plastic mesh fencing works well.
  - Use appropriate fence posts and adequate post spacing and depth to completely support the fence in an upright position.
- Locate temporary roadways, stockpiles, and layout areas to avoid stands of trees, shrubs, and grass.
- Consider the impact of grade changes to existing vegetation and the root zone.
- Maintain existing irrigation systems where feasible. Temporary irrigation may be required.
- Instruct employees and subcontractors to honor protective devices. Prohibit heavy equipment, vehicular traffic, or storage of construction materials within the protected area.

Costs

There is little cost associated with preserving existing vegetation if properly planned during the project design, and these costs may be offset by aesthetic benefits that enhance property values. During construction, the cost for preserving existing vegetation will likely be less than the cost of applying erosion and sediment controls to the disturbed area. Replacing vegetation inadvertently destroyed during construction can be extremely expensive, sometimes in excess of $10,000 per tree.

Inspection and Maintenance

During construction, the limits of disturbance should remain clearly marked at all times. Irrigation or maintenance of existing vegetation should be described in the landscaping plan. If damage to protected trees still occurs, maintenance guidelines described below should be followed:

- Verify that protective measures remain in place. Restore damaged protection measures immediately.
- Serious tree injuries shall be attended to by an arborist.
- Damage to the crown, trunk, or root system of a retained tree shall be repaired immediately.
- Trench as far from tree trunks as possible, usually outside of the tree drip line or canopy. Curve trenches around trees to avoid large roots or root concentrations. If roots are encountered, consider tunneling under them. When trenching or tunneling near or under trees to be retained, place tunnels at least 18 in. below the ground surface, and not below the tree center to minimize impact on the roots.
- Do not leave tree roots exposed to air. Cover exposed roots with soil as soon as possible. If soil covering is not practical, protect exposed roots with wet burlap or peat moss until the tunnel or trench is ready for backfill.
- Cleanly remove the ends of damaged roots with a smooth cut.
- Fill trenches and tunnels as soon as possible. Careful filling and tamping will eliminate air spaces in the soil, which can damage roots.
- If bark damage occurs, cut back all loosened bark into the undamaged area, with the cut tapered at the top and bottom and drainage provided at the base of the wood. Limit cutting the undamaged area as much as possible.
- Aerate soil that has been compacted over a trees root zone by punching holes 12 in. deep with an iron bar, and moving the bar back and forth until the soil is loosened. Place holes 18 in. apart throughout the area of compacted soil under the tree crown.
- Fertilization
  - Fertilize stressed or damaged broadleaf trees to aid recovery.
  - Fertilize trees in the late fall or early spring.

- Apply fertilizer to the soil over the feeder roots and in accordance with label instructions, but never closer than 3 ft to the trunk. Increase the fertilized area by one-fourth of the crown area for conifers that have extended root systems.

- Retain protective measures until all other construction activity is complete to avoid damage during site cleanup and stabilization.

References

County of Sacramento Tree Preservation Ordinance, September 1981.

Stormwater Quality Handbooks Construction Site Best Management Practices (BMPs) Manual, State of California Department of Transportation (Caltrans), November 2000.

Stormwater Management of the Puget Sound Basin, Technical Manual, Publication #91-75, Washington State Department of Ecology, February 1992.

Water Quality Management Plan for The Lake Tahoe Region, Volume II, Handbook of Management Practices, Tahoe Regional Planning Agency, November 1988.

Geotextiles and Mats

EC-7

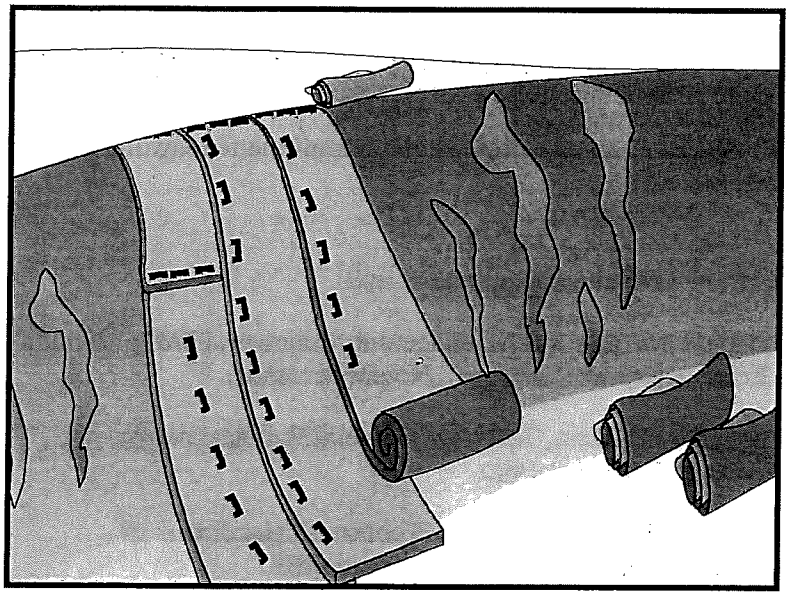

Categories		
EC	Erosion Control	☑
SE	Sediment Control	
TC	Tracking Control	
WE	Wind Erosion Control	☒
NS	Non-Stormwater Management Control	
WM	Waste Management and Materials Pollution Control	

Legend:

☑ **Primary Category**

☒ **Secondary Category**

Targeted Constituents	
Sediment	☑
Nutrients	
Trash	
Metals	
Bacteria	
Oil and Grease	
Organics	

Potential Alternatives

EC-3 Hydraulic Mulch

EC-4 Hydroseeding

If User/Subscriber modifies this fact sheet in any way, the CASQA name/logo and footer below must be removed from each page and not appear on the modified version.

Description and Purpose

Mattings, or Rolled Erosion Control Products (RECPs), can be made of natural or synthetic materials or a combination of the two. RECPs are used to cover the soil surface to reduce erosion from rainfall impact, hold soil in place, and absorb and hold moisture near the soil surface. Additionally, RECPs may be used to stabilize soils until vegetation is established or to reinforce non-woody surface vegetation.

Suitable Applications

RECPs are typically applied on slopes where erosion hazard is high and vegetation will be slow to establish. Mattings are also used on stream banks, swales and other drainage channels where moving water at velocities between 3 ft/s and 6 ft/s are likely to cause scour and wash out new vegetation, and in areas where the soil surface is disturbed and where existing vegetation has been removed. RECPs may also be used when seeding cannot occur (e.g., late season construction and/or the arrival of an early rain season). RECPs should be considered when the soils are fine grained and potentially erosive. RECPs should be considered in the following situations.

- Steep slopes, generally steeper than 3:1 (H:V)
- Slopes where the erosion potential is high
- Slopes and disturbed soils where mulch must be anchored
- Disturbed areas where plants are slow to develop

CASQA
CALIFORNIA STORMWATER QUALITY ASSOCIATION

- Channels with flows exceeding 3.3 ft/s
- Channels to be vegetated
- Stockpiles
- Slopes adjacent to water bodies

Limitations

- RECP installed costs are generally higher than other erosion control BMPs, limiting their use to areas where other BMPs are ineffective (e.g. channels, steep slopes).
- RECPs may delay seed germination, due to reduction in soil temperature.
- RECPs are generally not suitable for excessively rocky sites or areas where the final vegetation will be mowed (since staples and netting can catch in mowers). If a staple or pin cannot be driven into the soil because the underlying soil is too hard or rocky, then an alternative BMP should be selected.
- If used for temporary erosion control, RECPs should be removed and disposed of prior to application of permanent soil stabilization measures.
- The use of plastic should be limited to covering stockpiles or very small graded areas for short periods of time (such as through one imminent storm event) until more environmentally friendly measures, such as seeding and mulching, may be installed.
    - Plastic sheeting is easily vandalized, easily torn, photodegradable, and must be disposed of at a landfill.
    - Plastic sheeting results in 100% runoff, which may cause serious erosion problems in the areas receiving the increased flow.
- RECPs may have limitations based on soil type, slope gradient, or channel flow rate; consult the manufacturer for proper selection.
- Not suitable for areas that have foot traffic (tripping hazard) – e.g., pad areas around buildings under construction.
- RECPs that incorporate a plastic netting (e.g. straw blanket typically uses a plastic netting to hold the straw in place) may not be suitable near known wildlife habitat. Wildlife can become trapped in the plastic netting.
- RECPs may have limitations in extremely windy climates. However, when RECPs are properly trenched at the top and bottom and stapled in accordance with the manufacturer's recommendations, problems with wind can be minimized.

Implementation
Material Selection

- Natural RECPs have been found to be effective where re-vegetation will be provided by re-seeding. The choice of material should be based on the size of area, side slopes, surface conditions such as hardness, moisture, weed growth, and availability of materials.

- Additional guidance on the comparison and selection of temporary slope stabilization methods is provided in Appendix F of the Handbook.

- The following natural and synthetic RECPs are commonly used:

Geotextiles

- Material can be a woven or a non-woven polypropylene fabric with minimum thickness of 0.06 in., minimum width of 12 ft and should have minimum tensile strength of 150 lbs (warp), 80 lbs (fill) in conformance with the requirements in ASTM Designation: D 4632. The permittivity of the fabric should be approximately 0.07 sec^{-1} in conformance with the requirements in ASTM Designation: D4491. The fabric should have an ultraviolet (UV) stability of 70 percent in conformance with the requirements in ASTM designation: D4355. Geotextile blankets must be secured in place with wire staples or sandbags and by keying into tops of slopes to prevent infiltration of surface waters under geotextile. Staples should be made of minimum 11 gauge steel wire and should be U-shaped with 8 in. legs and 2 in. crown.

- Geotextiles may be reused if they are suitable for the use intended.

Plastic Covers

- Generally plastic sheeting should only be used as stockpile covering or for very small graded areas for short periods of time (such as through one imminent storm event). If plastic sheeting must be used, choose a plastic that will withstand photo degradation.

- Plastic sheeting should have a minimum thickness of 6 mils, and must be keyed in at the top of slope (when used as a temporary slope protection) and firmly held in place with sandbags or other weights placed no more than 10 ft apart. Seams are typically taped or weighted down their entire length, and there should be at least a 12 in. to 24 in. overlap of all seams. Edges should be embedded a minimum of 6 in. in soil (when used as a temporary slope protection).

- All sheeting must be inspected periodically after installation and after significant rainstorms to check for erosion, undermining, and anchorage failure. Any failures must be repaired immediately. If washout or breakages occur, the material should be re-installed after repairing the damage to the slope.

Erosion Control Blankets/Mats

- Biodegradable RECPs are typically composed of jute fibers, curled wood fibers, straw, coconut fiber, or a combination of these materials. In order for an RECP to be considered 100% biodegradable, the netting, sewing or adhesive system that holds the biodegradable mulch fibers together must also be biodegradable. See typical installation details at the end of this fact sheet.

- **Jute** is a natural fiber that is made into a yarn that is loosely woven into a biodegradable mesh. The performance of jute as a stand-alone RECP is low. Most other RECPs outperform jute as a temporary erosion control product and therefore jute is not commonly used. It is designed to be used in conjunction with vegetation. The material is supplied in rolled strips, which should be secured to the soil with U-shaped staples or stakes in accordance with manufacturers' recommendations.

- **Excelsior** (curled wood fiber) blanket material should consist of machine produced mats of curled wood excelsior with 80 percent of the fiber 6 in. or longer. The excelsior blanket should be of consistent thickness. The wood fiber must be evenly distributed over the entire area of the blanket. The top surface of the blanket should be covered with a photodegradable extruded plastic mesh. The blanket should be smolder resistant without the use of chemical additives and should be non-toxic and non-injurious to plant and animal life. Excelsior blankets should be furnished in rolled strips, a minimum of 48 in. wide, and should have an average weight of 0.8 lb/yd^2, ±10 percent, at the time of manufacture. Excelsior blankets must be secured in place with wire staples. Staples should be made of minimum 11 gauge steel wire and should be U-shaped with 8 in. legs and 2 in. crown.

- **Straw blanket** should be machine produced mats of straw with a lightweight biodegradable netting top layer. The straw should be attached to the netting with biodegradable thread or glue strips. The straw blanket should be of consistent thickness. The straw should be evenly distributed over the entire area of the blanket. Straw blanket should be furnished in rolled strips a minimum of 6.5 ft wide, a minimum of 80 ft long and a minimum of 0.5 lb/yd^2. Straw blankets must be secured in place with wire staples. Staples should be made of minimum 11 gauge steel wire and should be U-shaped with 8 in. legs and 2 in. crown.

- **Wood fiber blanket** is composed of biodegradable fiber mulch with extruded plastic netting held together with adhesives. The material is designed to enhance re-vegetation. The material is furnished in rolled strips, which must be secured to the ground with U-shaped staples or stakes in accordance with manufacturers' recommendations.

- **Coconut fiber blanket** should be a machine produced mat of 100 percent coconut fiber with biodegradable netting on the top and bottom. The coconut fiber should be attached to the netting with biodegradable thread or glue strips. The coconut fiber blanket should be of consistent thickness. The coconut fiber should be evenly distributed over the entire area of the blanket. Coconut fiber blanket should be furnished in rolled strips with a minimum of 6.5 ft wide, a minimum of 80 ft. long and a minimum of 0.5 lb/yd^2. Coconut fiber blankets must be secured in place with wire staples. Staples should be made of minimum 11 gauge steel wire and should be U-shaped with 8 in. legs and 2 in. crown.

- **Coconut fiber mesh** is a thin permeable membrane made from coconut or corn fiber that is spun into a yarn and woven into a biodegradable mat. It is designed to be used in conjunction with vegetation and typically has longevity of several years. The material is supplied in rolled strips, which must be secured to the soil with U-shaped staples or stakes in accordance with manufacturers' recommendations.

- **Straw coconut fiber blanket** should be machine produced mats of 70 percent straw and 30 percent coconut fiber with a biodegradable netting top layer and a biodegradable bottom net. The straw and coconut fiber should be attached to the netting with biodegradable thread or glue strips. The straw coconut fiber blanket should be of consistent thickness. The straw and coconut fiber should be evenly distributed over the entire area of the blanket. Straw coconut fiber blanket should be furnished in rolled strips a minimum of 6.5 ft wide, a minimum of 80 ft long and a minimum of 0.5 lb/yd^2. Straw coconut fiber blankets must be secured in place with wire staples. Staples should be made of minimum 11 gauge steel wire and should be U-shaped with 8 in. legs and 2 in. crown.

- Non-biodegradable RECPs are typically composed of polypropylene, polyethylene, nylon or other synthetic fibers. In some cases, a combination of biodegradable and synthetic fibers is used to construct the RECP. Netting used to hold these fibers together is typically non-biodegradable as well.

  - **Plastic netting** is a lightweight biaxially oriented netting designed for securing loose mulches like straw or paper to soil surfaces to establish vegetation. The netting is photodegradable. The netting is supplied in rolled strips, which must be secured with U-shaped staples or stakes in accordance with manufacturers' recommendations.

  - **Plastic mesh** is an open weave geotextile that is composed of an extruded synthetic fiber woven into a mesh with an opening size of less than ¼ in. It is used with re-vegetation or may be used to secure loose fiber such as straw to the ground. The material is supplied in rolled strips, which must be secured to the soil with U-shaped staples or stakes in accordance with manufacturers' recommendations.

  - **Synthetic fiber with netting** is a mat that is composed of durable synthetic fibers treated to resist chemicals and ultraviolet light. The mat is a dense, three dimensional mesh of synthetic (typically polyolefin) fibers stitched between two polypropylene nets. The mats are designed to be re-vegetated and provide a permanent composite system of soil, roots, and geomatrix. The material is furnished in rolled strips, which must be secured with U-shaped staples or stakes in accordance with manufacturers' recommendations.

  - **Bonded synthetic fibers** consist of a three dimensional geomatrix nylon (or other synthetic) matting. Typically it has more than 90 percent open area, which facilitates root growth. It's tough root reinforcing system anchors vegetation and protects against hydraulic lift and shear forces created by high volume discharges. It can be installed over prepared soil, followed by seeding into the mat. Once vegetated, it becomes an invisible composite system of soil, roots, and geomatrix. The material is furnished in rolled strips that must be secured with U-shaped staples or stakes in accordance with manufacturers' recommendations.

  - **Combination synthetic and biodegradable RECPs** consist of biodegradable fibers, such as wood fiber or coconut fiber, with a heavy polypropylene net stitched to the top and a high strength continuous filament geomatrix or net stitched to the bottom. The material is designed to enhance re-vegetation. The material is furnished in rolled strips,

which must be secured with U-shaped staples or stakes in accordance with manufacturers' recommendations.

Site Preparation

- Proper soil preparation is essential to ensure complete contact of the RECP with the soil. Soil Roughening is not recommended in areas where RECPs will be installed.
- Grade and shape the area of installation.
- Remove all rocks, clods, vegetation or other obstructions so that the installed blankets or mats will have complete, direct contact with the soil.
- Prepare seedbed by loosening 2 to 3 in. of topsoil.

Seeding/Planting

Seed the area before blanket installation for erosion control and re-vegetation. Seeding after mat installation is often specified for turf reinforcement application. When seeding prior to blanket installation, all areas disturbed during blanket installation must be re-seeded. Where soil filling is specified for turf reinforcement mats (TRMs), seed the matting and the entire disturbed area after installation and prior to filling the mat with soil.

Fertilize and seed in accordance with seeding specifications or other types of landscaping plans. The protective matting can be laid over areas where grass has been planted and the seedlings have emerged. Where vines or other ground covers are to be planted, lay the protective matting first and then plant through matting according to design of planting.

Check Slots

Check slots shall be installed as required by the manufacturer.

Laying and Securing Matting

- Before laying the matting, all check slots should be installed and the seedbed should be friable, made free from clods, rocks, and roots. The surface should be compacted and finished according to the requirements of the manufacturer's recommendations.
- Mechanical or manual lay down equipment should be capable of handling full rolls of fabric and laying the fabric smoothly without wrinkles or folds. The equipment should meet the fabric manufacturer's recommendations or equivalent standards.

Anchoring

- U-shaped wire staples, metal geotextile stake pins, or triangular wooden stakes can be used to anchor mats and blankets to the ground surface.
- Wire staples should be made of minimum 11 gauge steel wire and should be U-shaped with 8 in. legs and 2 in. crown.
- Metal stake pins should be 0.188 in. diameter steel with a 1.5 in. steel washer at the head of the pin, and 8 in. in length.
- Wire staples and metal stakes should be driven flush to the soil surface.

Installation on Slopes

Installation should be in accordance with the manufacturer's recommendations. In general, these will be as follows:

- Begin at the top of the slope and anchor the blanket in a 6 in. deep by 6 in. wide trench. Backfill trench and tamp earth firmly.
- Unroll blanket down slope in the direction of water flow.
- Overlap the edges of adjacent parallel rolls 2 to 3 in. and staple every 3 ft (or greater, per manufacturer's specifications).
- When blankets must be spliced, place blankets end over end (shingle style) with 6 in. overlap. Staple through overlapped area, approximately 12 in. apart.
- Lay blankets loosely and maintain direct contact with the soil. Do not stretch.
- Staple blankets sufficiently to anchor blanket and maintain contact with the soil. Staples should be placed down the center and staggered with the staples placed along the edges. Steep slopes, 1:1 (H:V) to 2:1 (H:V), require a minimum of 2 staples/yd^2. Moderate slopes, 2:1 (H:V) to 3:1 (H:V), require a minimum of 1 ½ staples/yd^2. Check manufacturer's specifications to determine if a higher density staple pattern is required.

Installation in Channels

Installation should be in accordance with the manufacturer's recommendations. In general, these will be as follows:

- Dig initial anchor trench 12 in. deep and 6 in. wide across the channel at the lower end of the project area.
- Excavate intermittent check slots, 6 in. deep and 6 in. wide across the channel at 25 to 30 ft intervals along the channels.
- Cut longitudinal channel anchor trenches 4 in. deep and 4 in. wide along each side of the installation to bury edges of matting, whenever possible extend matting 2 to 3 in. above the crest of the channel side slopes.
- Beginning at the downstream end and in the center of the channel, place the initial end of the first roll in the anchor trench and secure with fastening devices at 12 in. intervals. Note: matting will initially be upside down in anchor trench.
- In the same manner, position adjacent rolls in anchor trench, overlapping the preceding roll a minimum of 3 in.
- Secure these initial ends of mats with anchors at 12 in. intervals, backfill and compact soil.
- Unroll center strip of matting upstream. Stop at next check slot or terminal anchor trench. Unroll adjacent mats upstream in similar fashion, maintaining a 3 in. overlap.

- Fold and secure all rolls of matting snugly into all transverse check slots. Lay mat in the bottom of the slot then fold back against itself. Anchor through both layers of mat at 12 in. intervals, then backfill and compact soil. Continue rolling all mat widths upstream to the next check slot or terminal anchor trench.
- Alternate method for non-critical installations: Place two rows of anchors on 6 in. centers at 25 to 30 ft. intervals in lieu of excavated check slots.
- Staple shingled lap spliced ends a minimum of 12 in. apart on 12 in. intervals.
- Place edges of outside mats in previously excavated longitudinal slots; anchor using prescribed staple pattern, backfill, and compact soil.
- Anchor, fill, and compact upstream end of mat in a 12 in. by 6 in. terminal trench.
- Secure mat to ground surface using U-shaped wire staples, geotextile pins, or wooden stakes.
- Seed and fill turf reinforcement matting with soil, if specified.

Soil Filling (if specified for turf reinforcement mat (TRM))

Installation should be in accordance with the manufacturer's recommendations. Typical installation guidelines are as follows:

- After seeding, spread and lightly rake ½-3/4 inches of fine topsoil into the TRM apertures to completely fill TRM thickness. Use backside of rake or other flat implement.
- Alternatively, if allowed by product specifications, spread topsoil using lightweight loader, backhoe, or other power equipment. Avoid sharp turns with equipment.
- Always consult the manufacturer's recommendations for installation.
- Do not drive tracked or heavy equipment over mat.
- Avoid any traffic over matting if loose or wet soil conditions exist.
- Use shovels, rakes, or brooms for fine grading and touch up.
- Smooth out soil filling just exposing top netting of mat.

Temporary Soil Stabilization Removal

- Temporary soil stabilization removed from the site of the work must be disposed of if necessary.

Costs

Installed costs can be relatively high compared to other BMPs. Approximate costs for installed materials are shown below:

Rolled Erosion Control Products		Installed Cost per Acre (2004)[1]	Estimated Cost per Acre (2009)[2]
Biodegradable	Jute Mesh	$6,000-$7,000	$6,600-$7,700
	Curled Wood Fiber	$8,000-$10,500	$8,800-$11,050
	Straw	$8,000-$10,500	$8,800-$11,050
	Wood Fiber	$8,000-$10,500	$8,800-$11,050
	Coconut Fiber	$13,000-$14,000	$14,300-$15,400
	Coconut Fiber Mesh	$30,000-$33,000	$33,000-$36,300
	Straw Coconut Fiber	$10,000-$12,000	$11,000-$13,200
Non-Biodegradable	Plastic Netting	$2,000-$2,200	$2,200-$2,220
	Plastic Mesh	$3,000-$3,500	$3,300-$3,850
	Synthetic Fiber with Netting	$34,000-$40,000	$37,400-$44,000
	Bonded Synthetic Fibers	$45,000-$55,000	$49,500-$60,500
	Combination with Biodegradable	$30,000-$36,000	$33,000-$39,600

1. Source: Cost information received from individual product manufacturers solicited by Geosyntec Consultants (2004).
2. 2009 costs reflect a 10% escalation over year 2004 costs. Escalation based on informal survey of industry trends. Note: Expected cost increase is offset by competitive economic conditions.

Inspection and Maintenance

- RECPs must be inspected in accordance with General Permit requirements for the associated project type and risk level. It is recommended that at a minimum, BMPs be inspected weekly, prior to forecasted rain events, daily during extended rain events, and after the conclusion of rain events.
- Areas where erosion is evident shall be repaired and BMPs reapplied as soon as possible. Care should be exercised to minimize the damage to protected areas while making repairs, as any area damaged will require reapplication of BMPs.
- If washout or breakage occurs, re-install the material after repairing the damage to the slope or channel.
- Make sure matting is uniformly in contact with the soil.
- Check that all the lap joints are secure.
- Check that staples are flush with the ground.

References

Erosion and Sediment Control Manual, Oregon Department of Environmental Quality, February 2005

Erosion Control Pilot Study Report, State of California Department of Transportation (Caltrans), June 2000.

Guides for Erosion and Sediment Controls in California, USDA Soils Conservation Service, January 1991.

National Management Measures to Control Nonpoint Source Pollution from Urban Areas, United States Environmental Protection Agency, 2002.

Stormwater Quality Handbooks Construction Site Best Management Practices (BMPs) Manual, State of California Department of Transportation (Caltrans), March 2003.

Guidance Document: Soil Stabilization for Temporary Slopes, State of California Department of Transportation (Caltrans), November 1999.

Stormwater Management of the Puget Sound Basin, Technical Manual, Publication #91-75, Washington State Department of Ecology, February 1992.

Water Quality Management Plan for The Lake Tahoe Region, Volume II, Handbook of Management Practices, Tahoe Regional Planning Agency, November 1988.

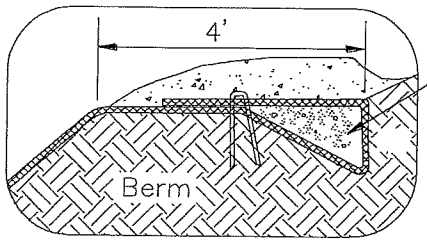

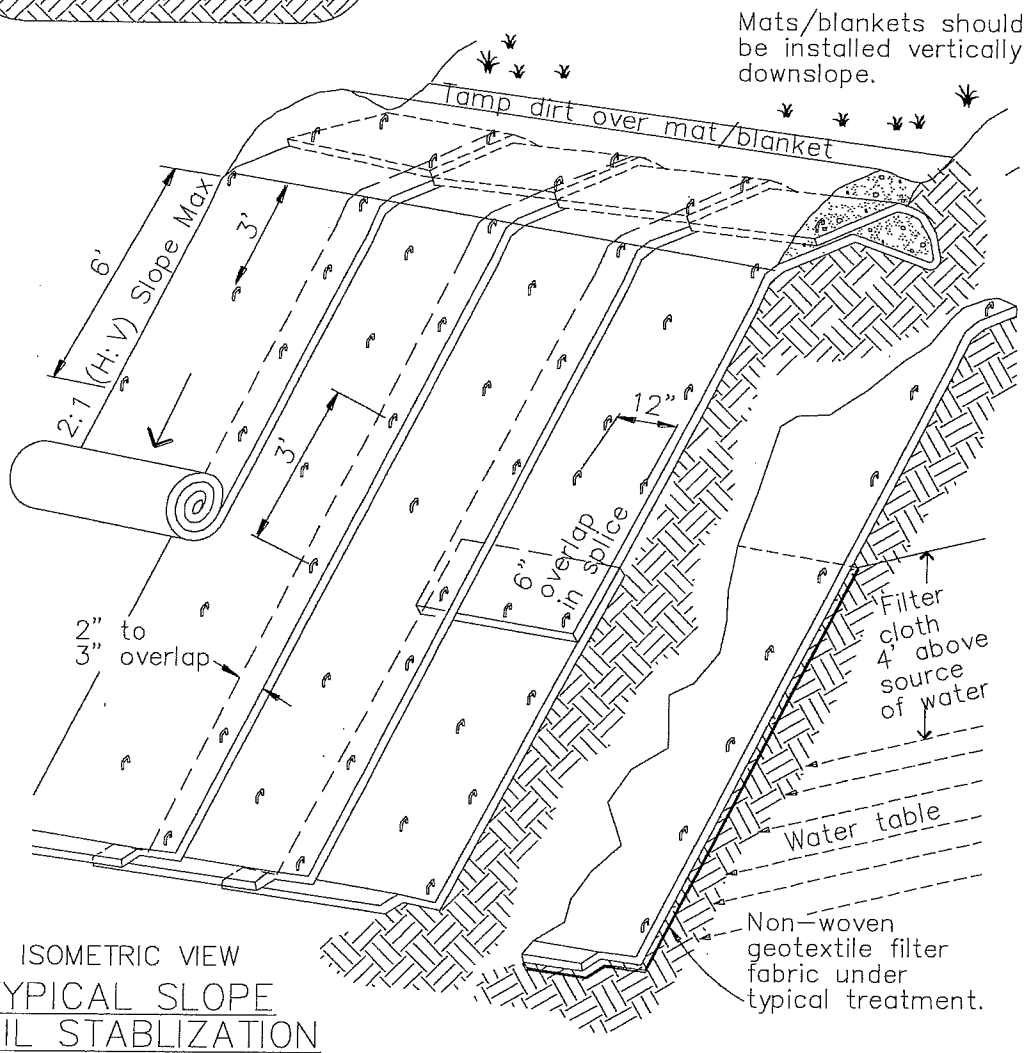

ISOMETRIC VIEW

TYPICAL SLOPE SOIL STABLIZATION

NTS

WET SLOPE LINING

NTS

NOTES:

1. Slope surface shall be free of rocks, clods, sticks and grass. Mats/blankets shall have good soil contact.
2. Lay blankets loosely and stake or staple to maintain direct contact with the soil. Do not stretch.
3. Install per manufacturer's recommendations

TYPICAL INSTALLATION DETAIL

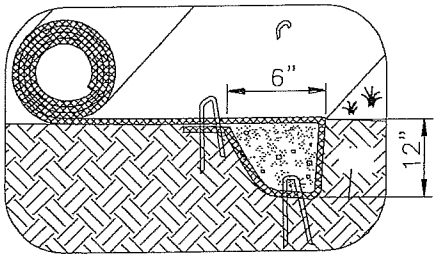

INITIAL CHANNEL ANCHOR TRENCH
NTS

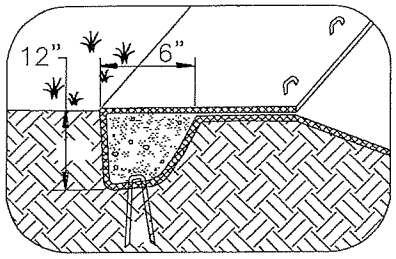

TERMINAL SLOPE AND CHANNEL ANCHOR TRENCH
NTS

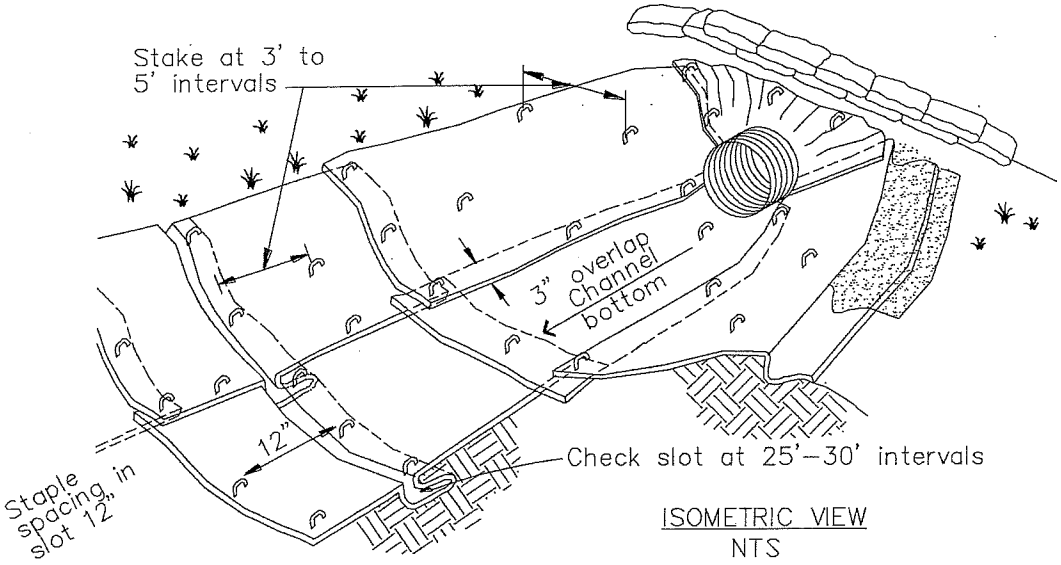

ISOMETRIC VIEW
NTS

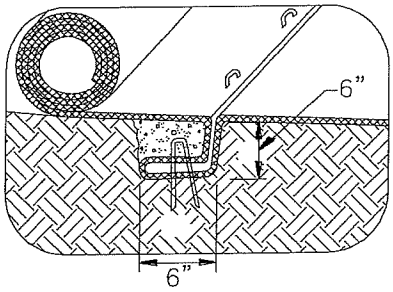

INTERMITTENT CHECK SLOT
NTS

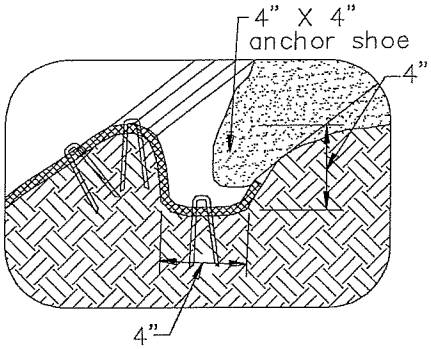

LONGITUDINAL ANCHOR TRENCH
NTS

NOTES:
1. Check slots to be constructed per manufacturers specifications.
2. Staking or stapling layout per manufacturers specifications.
3. Install per manufacturer's recommendations

TYPICAL INSTALLATION DETAIL

Fiber Rolls

SE-5

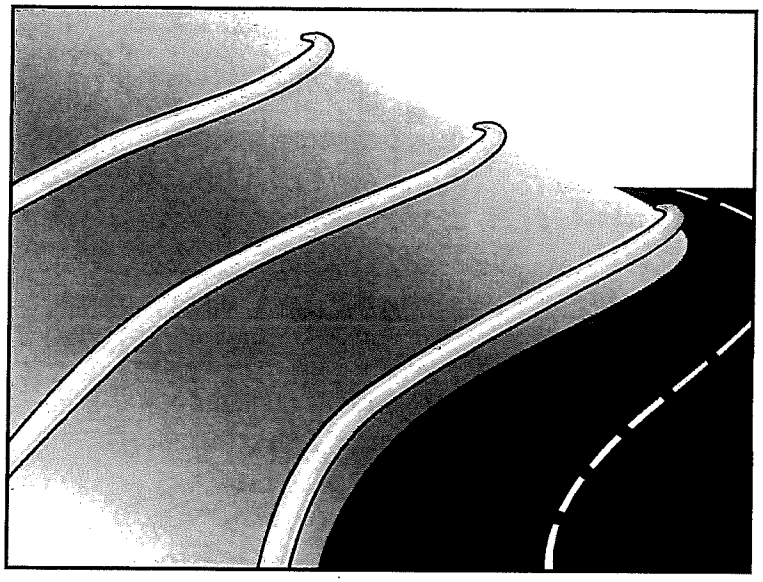

Categories

EC	Erosion Control	☒
SE	Sediment Control	☑
TC	Tracking Control	
WE	Wind Erosion Control	
NS	Non-Stormwater Management Control	
WM	Waste Management and Materials Pollution Control	

Legend:

☑ **Primary Category**

☒ **Secondary Category**

Description and Purpose

A fiber roll consists of straw, coir, or other biodegradable materials bound into a tight tubular roll wrapped by netting, which can be photodegradable or natural. Additionally, gravel core fiber rolls are available, which contain an imbedded ballast material such as gravel or sand for additional weight when staking the rolls are not feasible (such as use as inlet protection). When fiber rolls are placed at the toe and on the face of slopes along the contours, they intercept runoff, reduce its flow velocity, release the runoff as sheet flow, and provide removal of sediment from the runoff (through sedimentation). By interrupting the length of a slope, fiber rolls can also reduce sheet and rill erosion until vegetation is established.

Suitable Applications

Fiber rolls may be suitable:

- Along the toe, top, face, and at grade breaks of exposed and erodible slopes to shorten slope length and spread runoff as sheet flow.
- At the end of a downward slope where it transitions to a steeper slope.
- Along the perimeter of a project.
- As check dams in unlined ditches with minimal grade.
- Down-slope of exposed soil areas.
- At operational storm drains as a form of inlet protection.

Targeted Constituents

Sediment	☑
Nutrients	
Trash	
Metals	
Bacteria	
Oil and Grease	
Organics	

Potential Alternatives

SE-1 Silt Fence

SE-6 Gravel Bag Berm

SE-8 Sandbag Barrier

SE-12 Manufactured Linear Sediment Controls

SE-14 Biofilter Bags

If User/Subscriber modifies this fact sheet in any way, the CASQA name/logo and footer below must be removed from each page and not appear on the modified version.

- Around temporary stockpiles.

Limitations

- Fiber rolls are not effective unless trenched in and staked.
- Not intended for use in high flow situations.
- Difficult to move once saturated.
- If not properly staked and trenched in, fiber rolls could be transported by high flows.
- Fiber rolls have a very limited sediment capture zone.
- Fiber rolls should not be used on slopes subject to creep, slumping, or landslide.
- Rolls typically function for 12-24 months depending upon local conditions.

Implementation

Fiber Roll Materials

- Fiber rolls should be prefabricated.
- Fiber rolls may come manufactured containing polyacrylamide (PAM), a flocculating agent within the roll. Fiber rolls impregnated with PAM provide additional sediment removal capabilities and should be used in areas with fine, clayey or silty soils to provide additional sediment removal capabilities. Monitoring may be required for these installations.
- Fiber rolls are made from weed free rice straw, flax, or a similar agricultural material bound into a tight tubular roll by netting.
- Typical fiber rolls vary in diameter from 9 in. to 20 in. Larger diameter rolls are available as well.

Installation

- Locate fiber rolls on level contours spaced as follows:
  - Slope inclination of 4:1 (H:V) or flatter: Fiber rolls should be placed at a maximum interval of 20 ft.
  - Slope inclination between 4:1 and 2:1 (H:V): Fiber Rolls should be placed at a maximum interval of 15 ft. (a closer spacing is more effective).
  - Slope inclination 2:1 (H:V) or greater: Fiber Rolls should be placed at a maximum interval of 10 ft. (a closer spacing is more effective).
- Prepare the slope before beginning installation.
- Dig small trenches across the slope on the contour. The trench depth should be ¼ to 1/3 of the thickness of the roll, and the width should equal the roll diameter, in order to provide area to backfill the trench.

- It is critical that rolls are installed perpendicular to water movement, and parallel to the slope contour.
- Start building trenches and installing rolls from the bottom of the slope and work up.
- It is recommended that pilot holes be driven through the fiber roll. Use a straight bar to drive holes through the roll and into the soil for the wooden stakes.
- Turn the ends of the fiber roll up slope to prevent runoff from going around the roll.
- Stake fiber rolls into the trench.
  - Drive stakes at the end of each fiber roll and spaced 4 ft maximum on center.
  - Use wood stakes with a nominal classification of 0.75 by 0.75 in. and minimum length of 24 in.
- If more than one fiber roll is placed in a row, the rolls should be overlapped, not abutted.
- See typical fiber roll installation details at the end of this fact sheet.

Removal

- Fiber rolls can be left in place or removed depending on the type of fiber roll and application (temporary vs. permanent installation). Typically, fiber rolls encased with plastic netting are used for a temporary application because the netting does not biodegrade. Fiber rolls used in a permanent application are typically encased with a biodegradeable material and are left in place. Removal of a fiber roll used in a permanent application can result in greater disturbance.
- Temporary installations should only be removed when up gradient areas are stabilized per General Permit requirements, and/or pollutant sources no longer present a hazard. But, they should also be removed before vegetation becomes too mature so that the removal process does not disturb more soil and vegetation than is necessary.

Costs

Material costs for regular fiber rolls range from $20 - $30 per 25 ft roll.

Material costs for PAM impregnated fiber rolls range between 7.00-$9.00 per linear foot, based upon vendor research.

Inspection and Maintenance

- BMPs must be inspected in accordance with General Permit requirements for the associated project type and risk level. It is recommended that at a minimum, BMPs be inspected weekly, prior to forecasted rain events, daily during extended rain events, and after the conclusion of rain events.
- Repair or replace split, torn, unraveling, or slumping fiber rolls.
- If the fiber roll is used as a sediment capture device, or as an erosion control device to maintain sheet flows, sediment that accumulates in the BMP should be periodically removed

in order to maintain BMP effectiveness. Sediment should be removed when sediment accumulation reaches one-third the designated sediment storage depth.

- If fiber rolls are used for erosion control, such as in a check dam, sediment removal should not be required as long as the system continues to control the grade. Sediment control BMPs will likely be required in conjunction with this type of application.
- Repair any rills or gullies promptly.

References

Stormwater Quality Handbooks - Construction Site Best Management Practices (BMPs) Manual, State of California Department of Transportation (Caltrans), March 2003.

Erosion and Sediment Control Manual, Oregon Department of Environmental Quality, February 2005.

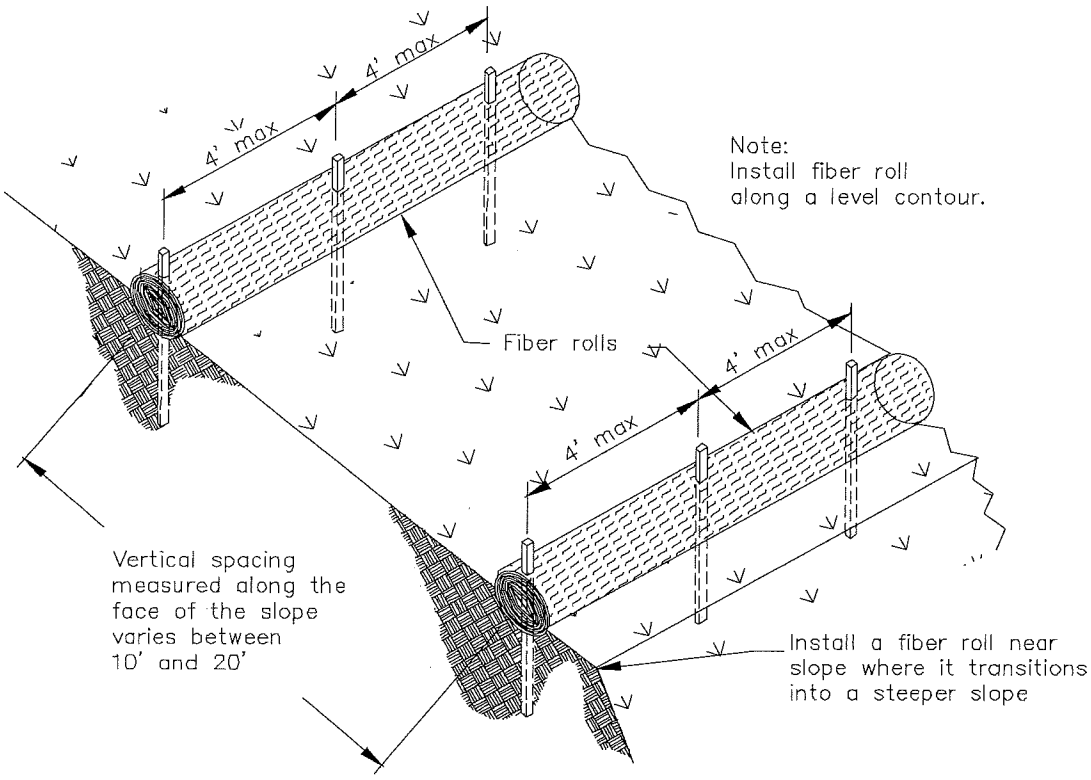

TYPICAL FIBER ROLL INSTALLATION

N.T.S.

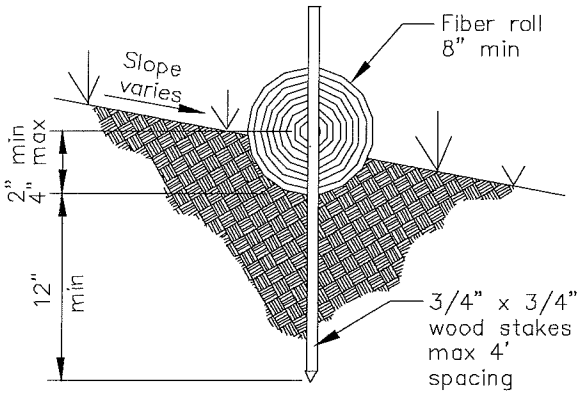

ENTRENCHMENT DETAIL

N.T.S.

Sediment Basin SE-2

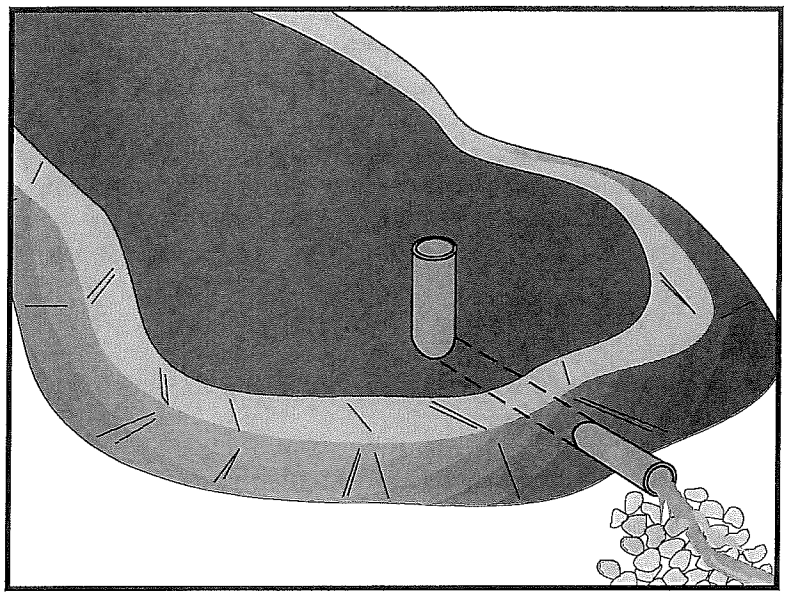

Categories		
EC	Erosion Control	
SE	Sediment Control	☑
TC	Tracking Control	
WE	Wind Erosion Control	
NS	Non-Stormwater Management Control	
WM	Waste Management and Materials Pollution Control	

Legend:

☑ **Primary Category**

☒ **Secondary Category**

Targeted Constituents	
Sediment	☑
Nutrients	
Trash	☑
Metals	
Bacteria	
Oil and Grease	
Organics	

Potential Alternatives

SE-3 Sediment Trap (for smaller areas)

If User/Subscriber modifies this fact sheet in any way, the CASQA name/logo and footer below must be removed from each page and not appear on the modified version.

Description and Purpose

A sediment basin is a temporary basin formed by excavation or by constructing an embankment so that sediment-laden runoff is temporarily detained under quiescent conditions, allowing sediment to settle out before the runoff is released.

Sediment basin design guidance presented in this fact sheet is intended to provide options, methods, and techniques to optimize temporary sediment basin performance and basin sediment removal. Basin design guidance provided in this fact sheet is not intended to guarantee basin effluent compliance with numeric discharge limits (numeric action levels or numeric effluent limits for turbidity). Compliance with discharge limits requires a thoughtful approach to comprehensive BMP planning, implementation, and maintenance. Therefore, optimally designed and maintained sediment basins should be used in conjunction with a comprehensive system of BMPs that includes:

- Diverting runoff from undisturbed areas away from the basin
- Erosion control practices to minimize disturbed areas on-site and to provide temporary stabilization and interim sediment controls (e.g., stockpile perimeter control, check dams, perimeter controls around individual lots) to reduce the basin's influent sediment concentration.

At some sites, sediment basin design enhancements may be required to adequately remove sediment. Traditional

CASQA
CALIFORNIA STORMWATER QUALITY ASSOCIATION

(a.k.a. "physical") enhancements such as alternative outlet configurations or flow deflection baffles increase detention time and other techniques such as outlet skimmers preferentially drain flows with lower sediment concentrations. These "physical" enhancement techniques are described in this fact sheet. To further enhance sediment removal particularly at sites with fine soils or turbidity sensitive receiving waters, some projects may need to consider implementing Active Treatment Systems (ATS) whereby coagulants and flocculants are used to enhance settling and removal of suspended sediments. Guidance on implementing ATS is provided in SE-11.

Suitable Applications

Sediment basins may be suitable for use on larger projects with sufficient space for constructing the basin. Sediment basins should be considered for use:

- Where sediment-laden water may enter the drainage system or watercourses
- On construction projects with disturbed areas during the rainy season
- At the outlet of disturbed watersheds between 5 acres and 75 acres and evaluated on a site by site basis
- Where post construction detention basins are required
- In association with dikes, temporary channels, and pipes used to convey runoff from disturbed areas

Limitations

Sediment basins must be installed only within the property limits and where failure of the structure will not result in loss of life, damage to homes or buildings, or interruption of use or service of public roads or utilities. In addition, sediment basins are attractive to children and can be very dangerous. Local ordinances regarding health and safety must be adhered to. If fencing of the basin is required, the type of fence and its location should be shown in the SWPPP and in the construction specifications.

- As a general guideline, sediment basins are suitable for drainage areas of 5 acres or more, but not appropriate for drainage areas greater than 75 acres. However, the tributary area should be evaluated on a site by site basis.
- Sediment basins may become an "attractive nuisance" and care must be taken to adhere to all safety practices. If safety is a concern, basin may require protective fencing.
- Sediment basins designed according to this fact sheet are only effective in removing sediment down to about the silt size fraction. Sediment-laden runoff with smaller size fractions (fine silt and clay) may not be adequately treated unless chemical (or other appropriate method) treatment is used in addition to the sediment basin.
- Basins with a height of 25 ft or more or an impounding capacity of 50 ac-ft or more must obtain approval from California Department of Water Resources Division of Safety of Dams (http://www.water.ca.gov/damsafety/).

- Water that stands in sediment basins longer than 96 hours may become a source of mosquitoes (and midges), particularly along perimeter edges, in shallow zones, in scour or below-grade pools, around inlet pipes, along low-flow channels, and among protected habitats created by emergent or floating vegetation (e.g. cattails, water hyacinth), algal mats, riprap, etc.

- Basins require large surface areas to permit settling of sediment. Size may be limited by the available area.

Implementation

General

A sediment basin is a controlled stormwater release structure formed by excavation or by construction of an embankment of compacted soil across a drainage way, or other suitable location. It is intended to trap sediment before it leaves the construction site. The basin is a temporary measure expected to be used during active construction in most cases and is to be maintained until the site area is permanently protected against erosion or a permanent detention basin is constructed.

Sediment basins are suitable for nearly all types of construction projects. Whenever possible, construct the sediment basins before clearing and grading work begins. Basins should be located at the stormwater outlet from the site but not in any natural or undisturbed stream. A typical application would include temporary dikes, pipes, and/or channels to convey runoff to the basin inlet.

Many development projects in California are required by local ordinances to provide a stormwater detention basin for post-construction flood control, desilting, or stormwater pollution control. A temporary sediment basin may be constructed by rough grading the post-construction control basins early in the project.

Sediment basins if properly designed and maintained can trap a significant amount of the sediment that flows into them. However, traditional basins do not remove all inflowing sediment. Therefore, they should be used in conjunction with erosion control practices such as temporary seeding, mulching, diversion dikes, etc., to reduce the amount of sediment flowing into the basin.

Planning

To improve the effectiveness of the basin, it should be located to intercept runoff from the largest possible amount of disturbed area. Locations best suited for a sediment basin are generally in lower elevation areas of the site (or basin tributary area) where site drainage would not require significant diversion or other means to direct water to the basin but outside jurisdictional waterways. However, as necessary, drainage into the basin can be improved by the use of earth dikes and drainage swales (see BMP EC-9). . The basin should not be located where its failure would result in the loss of life or interruption of the use or service of public utilities or roads.

Construct before clearing and grading work begins when feasible.

- Do not locate the basin in a jurisdictional stream.

- Basin sites should be located where failure of the structure will not cause loss of life, damage to homes or buildings, or interruption of use or service of public roads or utilities.
- Basins with a height of 25 ft or more or an impounding capacity of 50 ac-ft must obtain approval from the Division of Dam Safety. Local dam safety requirements may be more stringent.
- Limit the contributing area to the sediment basin to only the runoff from the disturbed soil areas. Use temporary concentrated flow conveyance controls to divert runoff from undisturbed areas away from the sediment basin.
- The basin should be located: (1) by excavating a suitable area or where a low embankment can be constructed across a swale, (2) where post-construction (permanent) detention basins will be constructed, and (3) where the basins can be maintained on a year-round basis to provide access for maintenance, including sediment removal and sediment stockpiling in a protected area, and to maintain the basin to provide the required capacity.

Design

When designing a sediment basin, designers should evaluate the site constraints that could affect the efficiency of the BMP. Some of these constraints include: the relationship between basin capacity, anticipated sediment load, and freeboard, available footprint for the basin, maintenance frequency and access, and hydraulic capacity and efficiency of the temporary outlet infrastructure. Sediment basins should be designed to maximize sediment removal and to consider sediment load retained by the basin as it affects basin performance.

Three Basin Design Options (Part A) are presented below along with a Typical Sediment/Detention Basin Design Methodology (Part B). Regardless of the design option that is selected, designers also need to evaluate the sediment basin capacity with respect to sediment accumulation (See "*Step 3. Evaluate the Capacity of the Sediment Basin*"), and should incorporate approaches identified in "*Step 4. Other Design Considerations*" to enhance basin performance.

A) Basin Design Options:

Option 1:

Design sediment basin(s) using the standard equation:

$$A_s = \frac{1.2Q}{V_s} \qquad \text{(Eq. 1)}$$

Where:

A_s = Minimum surface area for trapping soil particles of a certain size

V_s = Settling velocity of the design particle size chosen (V_s = 0.00028 ft/s for a design particle size of 0.01 mm at 68°F)

1.2 = Factor of safety recommended by USEPA to account for the reduction in basin efficiency caused due to turbulence and other non ideal conditions.

$Q = CIA$ (Eq.2)

Where

Q = Peak basin influent flow rate measured in cubic feet per second (ft^3/s)

C = Runoff coefficient (unitless)

I = Peak rainfall intensity for the 10-year, 6-hour rain event (in/hr)

A = Area draining into the sediment basin in acres

The design particle size should be the smallest soil grain size determined by wet sieve analysis, or the fine silt sized (0.01 mm [or 0.0004 in.]) particle, and the Vs used should be 100 percent of the calculated settling velocity.

This sizing basin method is dependent on the outlet structure design or the total basin length with an appropriate outlet. If the designer chooses to utilize the outlet structure to control the flow duration in the basin, the basin length (distance between the inlet and the outlet) should be a minimum of twice the basin width; the depth should not be less than 3 ft nor greater than 5 ft for safety reasons and for maximum efficiency (2 ft of sediment storage, 2 ft of capacity). If the designer chooses to utilize the basin length (with appropriate basin outlet) to control the flow duration in the basin, the basin length (distance between the inlet and the outlet) should be a specifically designed to capture 100% of the design particle size; the depth should not be less than 3 ft nor greater than 5 ft for safety reasons and for maximum efficiency (2 ft of sediment storage, 2 ft of capacity).

Basin design guidance provided herein assumes standard water properties (e.g., estimated average water temperature, kinematic viscosity, etc.) as a basis of the design. Designers can use an alternative design (Option 3) with site specific water properties as long as the design is as protective as Option 1.

The design guidance uses the peak influent flow rate to size sediment basins. Designers can use an alternative design (Option 3) with site specific average flow rates as long as the design is as protective as Option 1.

The basin should be located on the site where it can be maintained on a year-round basis and should be maintained on a schedule to retain the 2 ft of capacity.

Option 2:

Design pursuant to local ordinance for sediment basin design and maintenance, provided that the design efficiency is as protective or more protective of water quality than Option 1.

Option 3:

The use of an equivalent surface area design or equation provided that the design efficiency is as protective or more protective of water quality than Option 1.

B) Typical Sediment/Detention Basin Design Methodology:

Design of a sediment basin requires the designer to have an understanding of the site constraints, knowledge of the local soil (e.g., particle size distribution of potentially contributing soils), drainage area of the basin, and local hydrology. Designers should not assume that a sediment basin for location A is applicable to location B. Therefore, designers can use this factsheet as guidance but will need to apply professional judgment and knowledge of the site to design an effective and efficient sediment basin. The following provides a general overview of typical design methodologies:

Step 1. Hydrologic Design

- Evaluate the site constraints and assess the drainage area for the sediment basin. Designers should consider on- and off-site flows as well as changes in the drainage area associated with site construction/disturbance. To minimize additional construction during the course of the project, the designer should consider identifying the maximum drainage area when calculating the basin dimensions.

- If a local hydrology manual is not available it is recommended to follow standard rational method procedures to estimate the flow rate. The references section of this factsheet provides a reference to standard hydrology textbooks that can provide standard methodologies. If local rainfall depths are not available, values can be obtained from standard precipitation frequency maps from NOAA (downloaded from http://www.wrcc.dri.edu/pcpnfreq.html).

Step 2. Hydraulic Design

- Calculate the surface area required for the sediment basin using Equation 1. In which the flow rate is estimated for a 10-yr 6-hr event using rational method procedure listed in local hydrology manual and Vs is estimated using Stokes Law presented in Equation 3.

$$V_s = 2.81d^2 \qquad \text{(Eq.3)}$$

Where

V_s = Settling velocity in feet per second at 68°F

d = diameter of sediment particle in millimeters (smallest soil grain size determined by wet sieve analysis or fine silt (0.01 mm [or 0.0004 in.])

- In general the basin outlet design requires an iterative trial and error approach that considered the maximum water surface elevation, the elevation versus volume (stage-storage) relationship, the elevation verses basin outflow (a.k.a.-discharge) relationship, and the estimated inflow hydrograph. To adequately design the basins to settle sediment, the outlet configuration and associated outflow rates can be estimated by numerous methodologies. The following provides some guidance for design the basin outlet:

  - An outlet should have more than one orifice.

  - An outlet design typically utilizes multiple horizontal rows of orifices (approximately 3 or more) with at least 2 orifices per row (see Figures 1 and 2 at the end of this fact sheet).

- Orifices can vary in shape.
- Select the appropriate orifice diameter and number of perforations per row with the objective of minimizing the number of rows while maximizing the detention time.
- The diameter of each orifice is typically a maximum of 3-4 inches and a minimum of 0.25-0.5 inches.
- If a rectangular orifice is used, it is recommended to have minimum height of 0.5 inches and a maximum height of 6 inches.
- Rows are typically spaced at three times the diameter center to center vertically with a minimum distance of approximately 4 inches on center and a maximum distance of 1 foot on center.
- To estimate the outflow rate, each row is calculated separately based on the flow through a single orifice then multiplied by the number of orifices in the row. This step is repeated for each of the rows. Once all of the orifices are estimated, the total outflow rate versus elevation (stage-discharge curve) is developed to evaluate the detention time within the basin.
- Flow through a single orifice can be estimated using an Equation 4:

$$Q = BC' A(2gH)^{0.5} \qquad \text{(Eq.4)}$$

Where
Q = Outflow rate in ft^3/s
C′ = Orifice coefficient (unitless)
A = Area of the orifice (ft^2)
g = acceleration due to gravity (ft^3/s)
H = Head above the orifice (ft)
B = Anticipated Blockage or clogging factor (unitless), It is dependent on anticipated sediment and debris load, trash rack configuration etc, so the value is dependent on design engineers professional judgment and/or local requirements (B is never greater than 1 and a value of 0.5 is generally used)

- Care must be taken in the selection of orifice coefficient ("C′"); 0.60 is most often recommended and used. However, based on actual tests, Young and Graziano (1989), "Outlet Hydraulics of Extended Detention Facilities for Northern Virginia Planning District Commission", recommends the following:
  - C′ = 0.66 for thin materials; where the thickness is equal to or less than the orifice diameter, or
  - C′ = 0.80 when the material is thicker than the orifice diameter
- If different sizes of orifices are used along the riser then they have to be sized such that not more than 50 percent of the design storm event drains in one-third of the drawdown time (to provide adequate settling time for events smaller than the design storm event)

and the entire volume drains within 96 hours or as regulated by the local vector control agency. If a basin fails to drain within 96 hours, the basin must be pumped dry.

- Because basins are not maintained for infiltration, water loss by infiltration should be disregarded when designing the hydraulic capacity of the outlet structure.

- Floating Outlet Skimmer: The floating skimmer (see Figure 3 at the end of this fact sheet is an alternative outlet configuration (patented) that drains water from upper portion of the water column. This configuration has been used for temporary and permanent basins and can improve basin performance by eliminating bottom orifices which have the potential of discharging solids. Some design considerations for this alternative outlet device includes the addition of a sand filter or perforated under drain at the low point in the basin and near the floating skimmer. These secondary drains allow the basin to fully drain. More detailed guidelines for sizing the skimmer can be downloaded from http://www.fairclothskimmer.com/.

- Hold and Release Valve: An ideal sediment/detention basin would hold all flows to the design storm level for sufficient time to settle solids, and then slowly release the storm water. Implementing a reliable valve system for releasing detention basins is critical to eliminate the potential for flooding in such a system. Some variations of hold and release valves include manual valves, bladder devices or electrically operated valves. When a precipitation event is forecast, the valve would be close for the duration of the storm and appropriate settling time. When the settling duration is met (approximately 24 or 48 hours), the valve would be opened and allow the stormwater to be released at a rate that does not resuspend settled solids and in a non-erosive manner. If this type of system is used the valve should be designed to empty the entire basin within 96 hours or as stipulated by local vector control regulations.

Step 3. Evaluate the Capacity of the Sediment Basin

- Typically, sediment basins do not perform as designed when they are not properly maintained or the sediment yield to the basin is larger than expected. As part of a good sediment basin design, designers should consider maintenance cycles, estimated soil loss and/or sediment yield, and basin sediment storage volume. The two equations below can be used to quantify the amount of soil entering the basin.

- The Revised Universal Soil Loss Equation (RUSLE, Eq.5) can be used to estimate annual soil loss and the Modified Universal Soil Equation (MUSLE, Eq.6) can be used to estimate sediment yield from a single storm event.

$$A = R \times K \times LS \times C \times P \qquad \text{(Eq.5)}$$

$$Y = 95 \left(Q \times q_p \right)^{0.56} \times K \times LS \times C \times P \qquad \text{(Eq.6)}$$

Where:

A = annual soil loss, tons/acre-year

R = rainfall erosion index, in 100 ft.tons/acre.in/hr

K = soil erodibility factor, tons/acre per unit of R

LS = slope length and steepness factor (unitless)

C = vegetative cover factor (unitless)

P = erosion control practice factor (unitless)

Y = single storm sediment yield in tons

Q = runoff volume in acre-feet

q_p = peak flow in cfs

- Detailed descriptions and methodologies for estimating the soil loss can be obtained from standard hydrology text books (See References section).
- Determination of the appropriate equation should consider construction duration and local environmental factors (soils, hydrology, etc.). For example, if a basin is planned for a project duration of 1 year and the designer specifies one maintenance cycle, RUSLE could be used to estimate the soil loss and thereby the designer could indicate that the sediment storage volume would be half of the soil loss value estimated. As an example for use of MUSLE, a project may have a short construction duration thereby requiring fewer maintenance cycles and a reduced sediment storage volume. MUSLE would be used to estimate the anticipated soil loss based on a specific storm event to evaluate the sediment storage volume and appropriate maintenance frequency.
- The soil loss estimates are an essential step in the design and it is essential that the designer provide construction contractors with enough information to understand maintenance frequency and/or depths within the basin that would trigger maintenance. Providing maintenance methods, frequency and specification should be included in design bid documents such as the SWPPP Site Map.
- Once the designer has quantified the amount of soil entering the basin, the depth required for sediment storage can be determined by dividing the estimated sediment loss by the surface area of the basin.

Step 4. Other Design Considerations

- Consider designing the volume of the settling zone for the total storm volume associated with the 2-year event or other appropriate design storms specified by the local agency. This volume can be used as a guide for sizing the basin without iterative routing calculations. The depth of the settling zone can be estimated by dividing the estimated 2-yr storm volume by the surface area of the basin.
- The basin volume consists of two zones:
  - A sediment storage zone at least 1 ft deep.
  - A settling zone at least 2 ft deep.

- The basin depth must be no less than 3 ft (not including freeboard).

- Proper hydraulic design of the outlet is critical to achieving the desired performance of the basin. The outlet should be designed to drain the basin within 24 to 96 hours (also referred to as "drawdown time"). The 24-hour limit is specified to provide adequate settling time; the 96-hour limit is specified to mitigate vector control concerns.

- Confirmation of the basin performance can be evaluated by routing the design storm (10-yr 6-hr, or as directed by local regulations) through the basin based on the basin volume (stage-storage curve) and the outlet design (stage-discharge curve based on the orifice configuration or equivalent outlet design).

- Sediment basins, regardless of size and storage volume, should include features to accommodate overflow or bypass flows that exceed the design storm event.

  - Include an emergency spillway to accommodate flows not carried by the principal spillway. The spillway should consist of an open channel (earthen or vegetated) over undisturbed material (not fill) or constructed of a non-erodible riprap (or equivalent protection) on fill slopes.

  - The spillway control section, which is a level portion of the spillway channel at the highest elevation in the channel, should be a minimum of 20 ft in length.

- Rock, vegetation or appropriate erosion control should be used to protect the basin inlet, outlet, and slopes against erosion.

- The total depth of the sediment basin should include the depth required for sediment storage, depth required for settling zone and freeboard of at least 1 foot or as regulated by local flood control agency for a flood event specified by the local agency.

- The basin alignment should be designed such that the length of the basin is more than twice the width of the basin; the length should be determined by measuring the distance between the inlet and the outlet. If the site topography does not allow for this configuration baffles should be installed so that the ratio is satisfied. If a basin has more than one inflow point, any inflow point that conveys more than 30 percent of the total peak inflow rate has to meet the required length to width ratio.

- An alternative basin sizing method proposed by Fifield (2004) can be consulted to estimate an alternative length to width ratio and basin configuration. These methods can be considered as part of Option 3 which allows for alternative designs that are protective or more protective of water quality.

- Baffles (see Figure 4 at the end of this fact sheet) can be considered at project sites where the existing topography or site constraints limit the length to width ratio. Baffles should be constructed of earthen berms or other structural material within the basin to divert flow in the basin, thus increasing the effective flow length from the basin inlet to the outlet riser. Baffles also reduce the change of short circuiting and allows for settling throughout the basin.

- Baffles are typically constructed from the invert of the basin to the crest of the emergency spillway (i.e., design event flows are meant to flow around the baffles and flows greater than the design event would flow over the baffles to the emergency spillway).
- Use of other materials for construction of basin baffles (such as silt fence) may not be appropriate based on the material specifications and will require frequent maintenance (maintain after every storm event). Maintenance may not be feasible when required due to flooded conditions resulting from frequent (i.e., back to back) storm events. Use of alternative baffle materials should not deviate from the intended purpose of the material, as described by the manufacturer.
- Sediment basins are best used in conjunction with erosion controls.
- Basins with an impounding levee greater than 4.5 ft tall, measured from the lowest point to the impounding area to the highest point of the levee, and basins capable of impounding more than 35,000 ft^3, should be designed by a Registered Civil Engineer. The design should include maintenance requirements, including sediment and vegetation removal, to ensure continuous function of the basin outlet and bypass structures.
- A forebay, constructed upstream of the basin, may be provided to remove debris and larger particles.
- The outflow from the sediment basin should be provided with velocity dissipation devices (see BMP EC-10) to prevent erosion and scouring of the embankment and channel.
- The principal outlet should consist of a corrugated metal, high density polyethylene (HDPE), or reinforced concrete riser pipe with dewatering holes and an anti-vortex device and trash rack attached to the top of the riser, to prevent floating debris from flowing out of the basin or obstructing the system. This principal structure should be designed to accommodate the inflow design storm.
- A rock pile or rock-filled gabions can serve as alternatives to the debris screen, although the designer should be aware of the potential for extra maintenance involved should the pore spaces in the rock pile clog.
- The outlet structure should be placed on a firm, smooth foundation with the base securely anchored with concrete or other means to prevent floatation.
- Attach riser pipe (watertight connection) to a horizontal pipe (barrel). Provide anti-seep collars on the barrel.
- Cleanout level should be clearly marked on the riser pipe.

Installation

- Securely anchor and install an anti-seep collar on the outlet pipe/riser and provide an emergency spillway for passing major floods (see local flood control agency).
- Areas under embankments must be cleared and stripped of vegetation.

- Chain link fencing should be provided around each sediment basin to prevent unauthorized entry to the basin or if safety is a concern.

Costs

The cost of a sediment basin is highly variable and is dependent of the site configuration. To decrease basin construction costs, designers should consider using existing site features such as berms or depressed area to site the sediment basin. Designers should also consider potential savings associated with designing the basin to minimize the number of maintenance cycles and siting the basin in a location where a permanent BMP (e.g., extended detention basin) is required for the project site.

Inspection and Maintenance

- BMPs must be inspected in accordance with General Permit requirements for the associated project type and risk level and as required by local requirements. It is recommended that at a minimum, basins be inspected weekly, prior to forecasted rain events, daily during extended rain events, and after the conclusion of rain events.
- Examine basin banks for seepage and structural soundness.
- Check inlet and outlet structures and spillway for any damage or obstructions. Repair damage and remove obstructions as needed.
- Check inlet and outlet area for erosion and stabilize if required.
- Check fencing for damage and repair as needed.
- Sediment that accumulates in the basin must be periodically removed in order to maintain BMP effectiveness. Sediment should be removed when sediment accumulation reaches one-half the designated sediment storage volume. Sediment removed during maintenance should be managed properly. The sediment should be appropriately evaluated and used or disposed of accordingly. Options include: incorporating sediment into earthwork on the site (only if there is no risk that sediment is contaminated); or off-site export/disposal at an appropriate location (e.g., sediment characterization and disposal to an appropriate landfill).
- Remove standing water from basin within 96 hours after accumulation.
- If the basin does not drain adequately (e.g., due to storms that are more frequent or larger than the design storm or other unforeseen site conditions), dewatering should be conducted in accordance with appropriate dewatering BMPs (see NS-2) and in accordance with local permits as applicable.
- To minimize vector production:
  - Remove accumulation of live and dead floating vegetation in basins during every inspection.
  - Remove excessive emergent and perimeter vegetation as needed or as advised by local or state vector control agencies.

References

A Current Assessment of Urban Best Management Practices: Techniques for Reducing Nonpoint Source Pollution in the Coastal Zones, Metropolitan Washington Council of Governments, March 1992.

Draft-Sedimentation and Erosion Control, an Inventory of Current Practices, USEPA. April 1990.

U.S. Environmental Protection Agency (USEPA). Erosion and Sediment Control, Surface Mining in the Eastern U.S., U.S. Environmental Protection Agency, Office of Water, Washington, DC,Washington, D.C., 1976.

Fifield, J.S. Designing for Effective Sediment and Erosion Control on Construction Sites. Forester Press, Santa Barbara, CA. 2004.

Goldman S.J., Jackson K. and Bursztynsky T.A. Erosion and Sediment Control Handbook. McGraw-Hill Book Company, 1986.

U.S. Environmental Protection Agency (USEPA). Guidance Specifying Management Measures for Nonpoint Pollution in Coastal Waters. EPA 840-B-9-002. U.S. Environmental Protection Agency, Office of Water, Washington, DC, 1993.

Guidelines for the Design and Construction of Small Embankment Dams, Division of Safety of Dams, California Department of Water Resources, March 1986.

Haan C.T., Barfield B.J. and Hayes J.C. Design Hydrology and Sedimentology for Small Catchments. Academic Press. 1994.

Inlet/Outlet Alternatives for Extended Detention Basins. State of California Department of Transportation (Caltrans), 2001.

Manual of Standards of Erosion and Sediment Control Measures, Association of Bay Area Governments, May 1995.

McLean, J., 2000. Mosquitoes in Constructed Wetlands: A Management Bugaboo? In T.R. Schueler and H.K. Holland [eds.], The Practice of Watershed Protection. pp. 29-33. Center for Watershed Protection, Ellicott City, MD, 2000.

Metzger, M.E., D. F. Messer, C. L. Beitia, C. M. Myers, and V. L. Kramer. The Dark Side of Stormwater Runoff Management: Disease Vectors Associated with Structural BMPs, 2002.

National Management Measures to Control Nonpoint Source Pollution from Urban Areas, United States Environmental Protection Agency, 2002.

Proposed Guidance Specifying Management Measures for Sources of Nonpoint Pollution in Coastal Water, Work Group-Working Paper, USEPA, April 1992.

Stormwater Management of the Puget Sound Basin, Technical Manual, Publication #91-75, Washington State Department of Ecology, February 1992.

Stormwater Quality Handbooks - Construction Site Best Management Practices (BMPs) Manual, State of California Department of Transportation (Caltrans), November 2000.

Water Quality Management Plan for the Lake Tahoe Region, Volume II Handbook of Management Practices, Tahoe Regional Planning Agency, November 1988.

Young, G.K. and Graziano, F., Outlet Hydraulics of Extended Detention Facilities for Northern Virginia Planning District Commission, 1989.

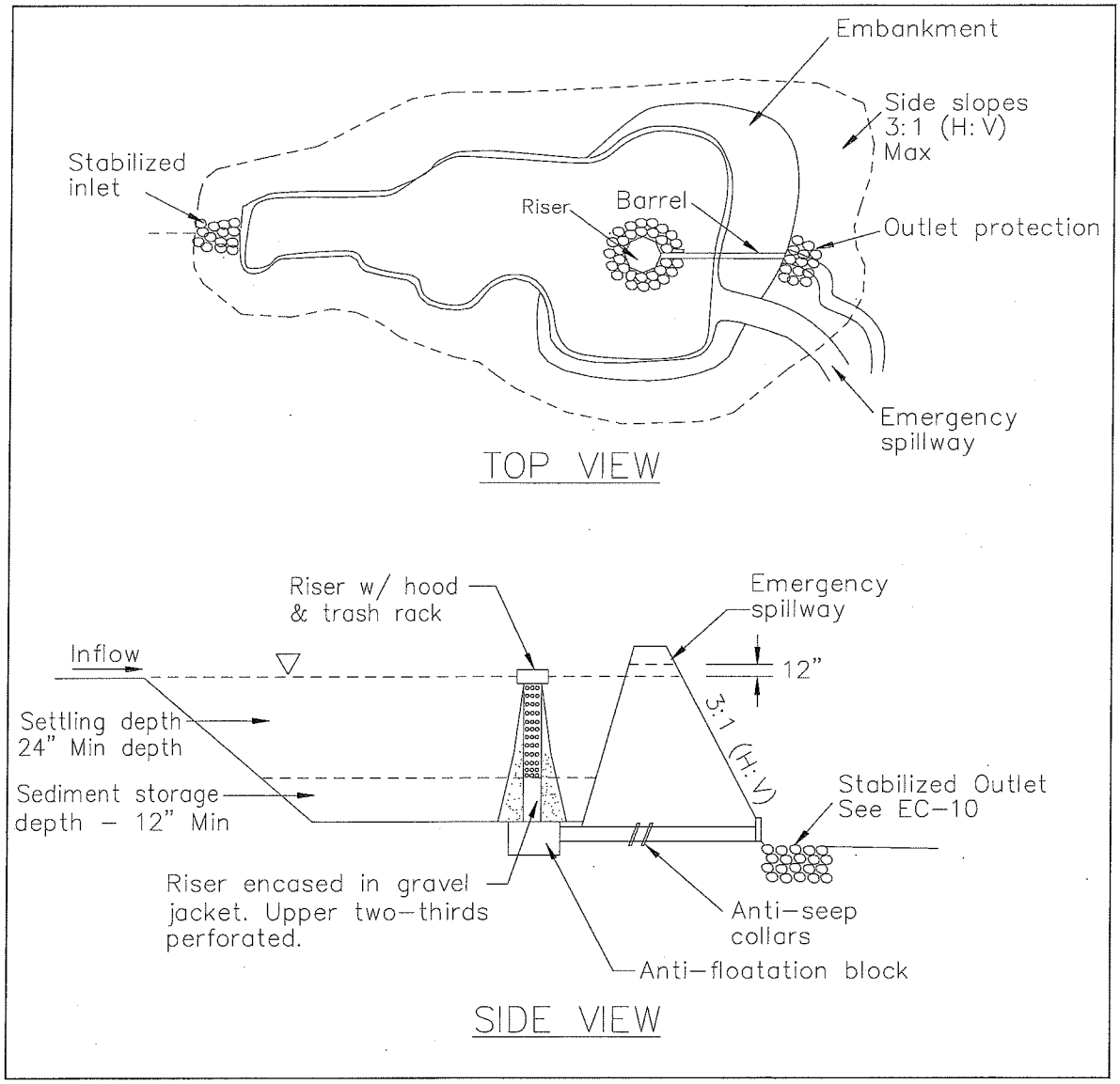

FIGURE 1: TYPICAL TEMPORARY SEDIMENT BASIN
MULTIPLE ORIFICE DESIGN
NOT TO SCALE

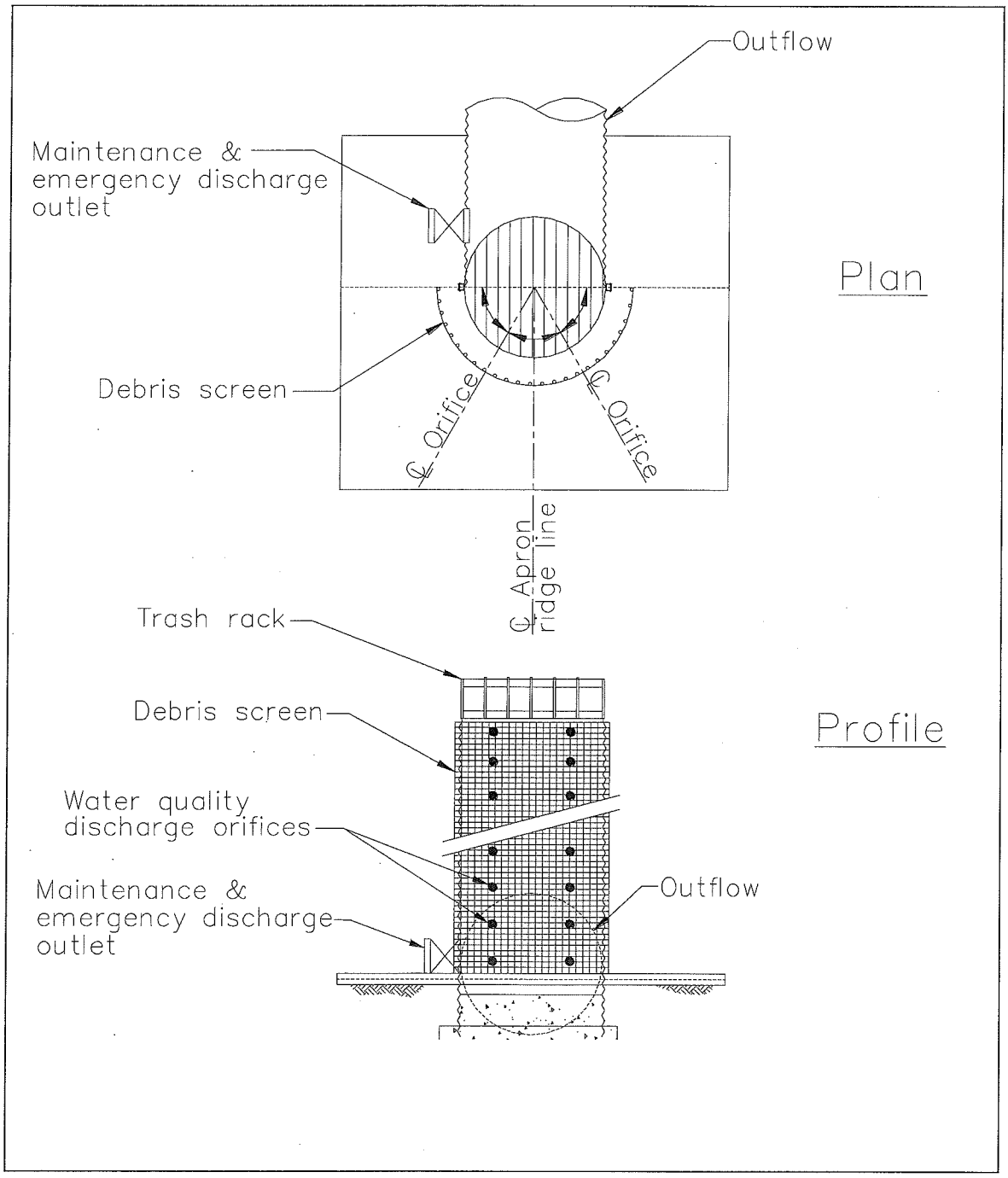

FIGURE 2: MULTIPLE ORIFICE OUTLET RISER
NOT TO SCALE

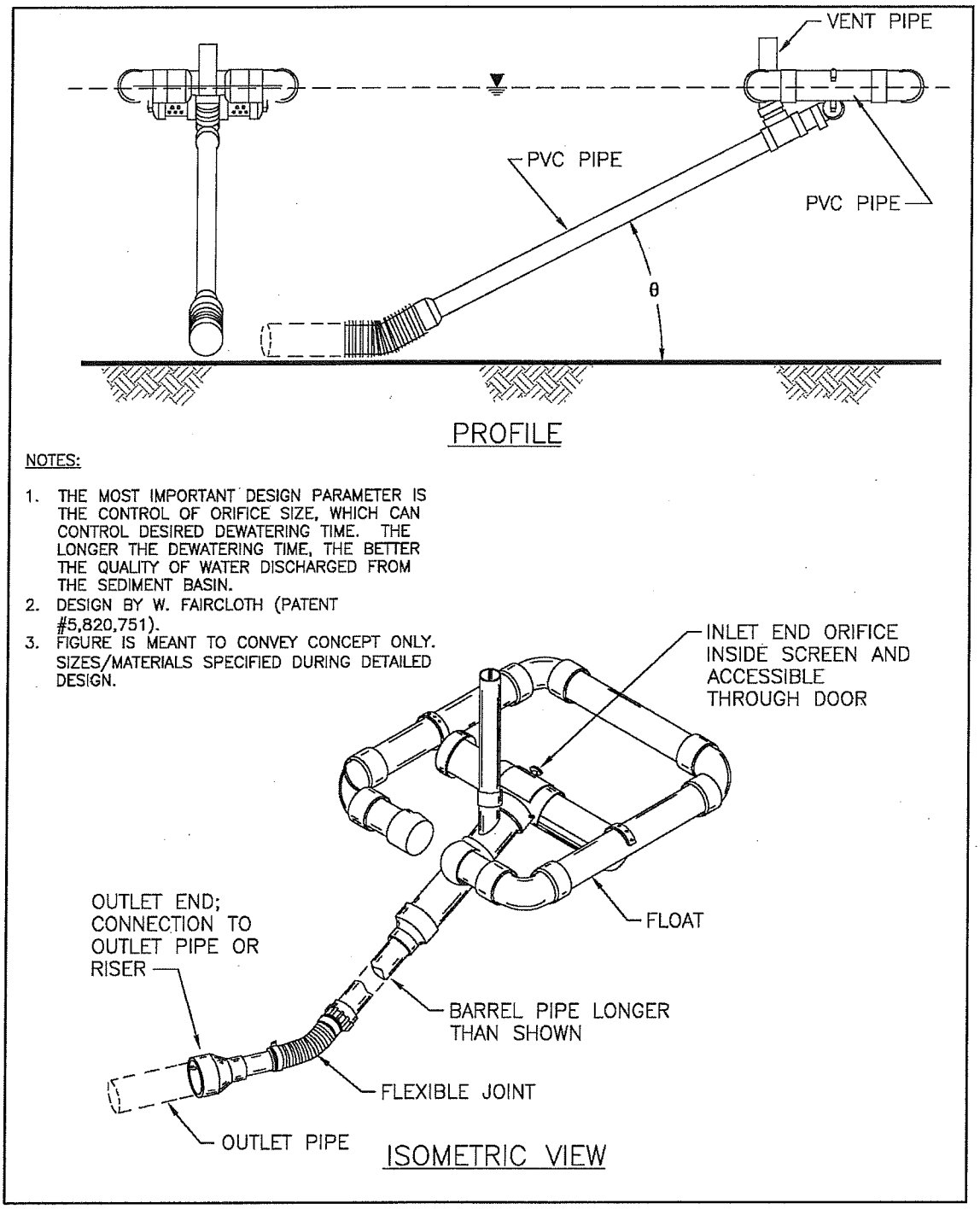

FIGURE 3: TYPICAL SKIMMER

NOT TO SCALE

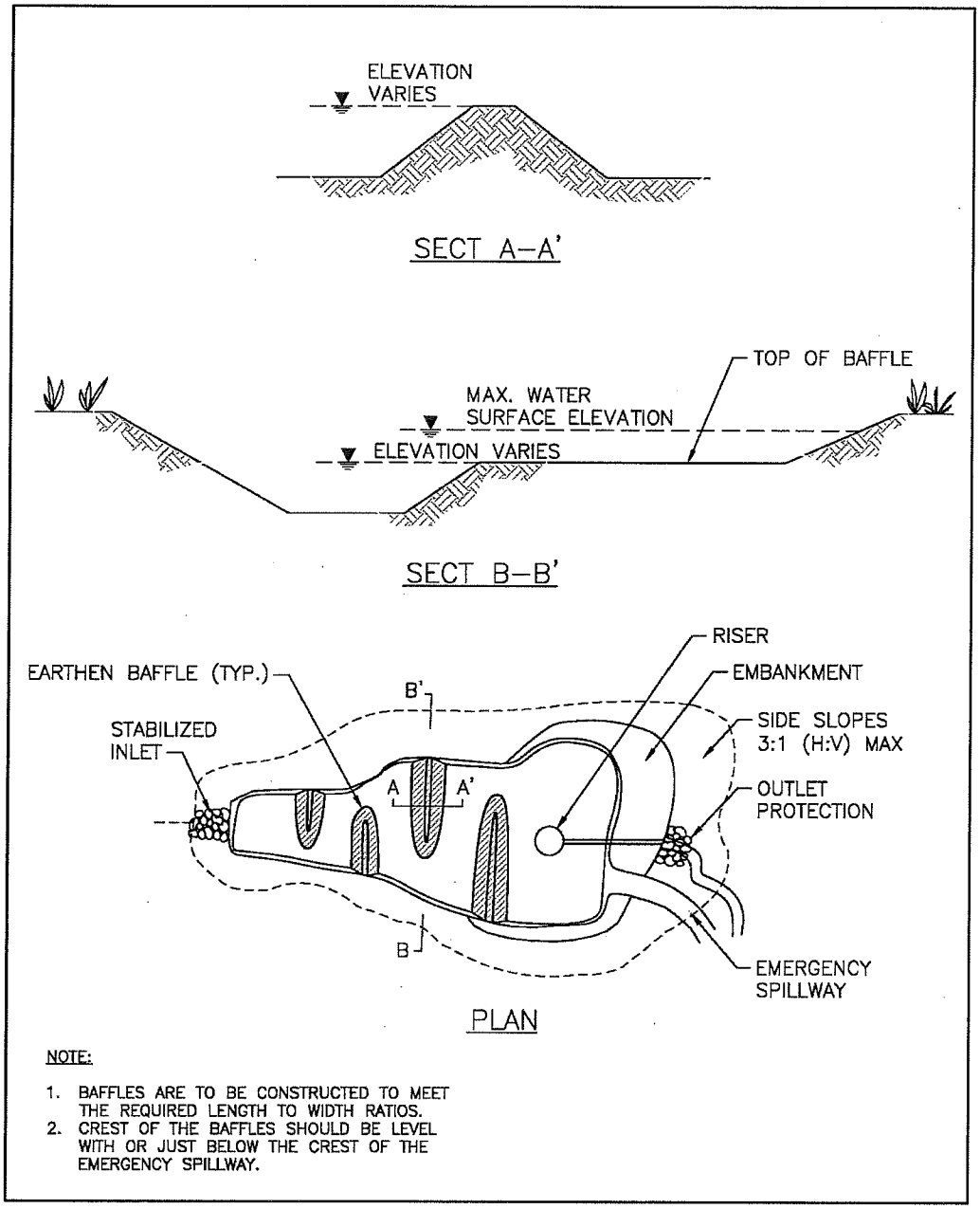

FIGURE 4: TYPICAL TEMPORARY SEDIMENT BASIN WITH BAFFLES

NOT TO SCALE

Check Dams SE-4

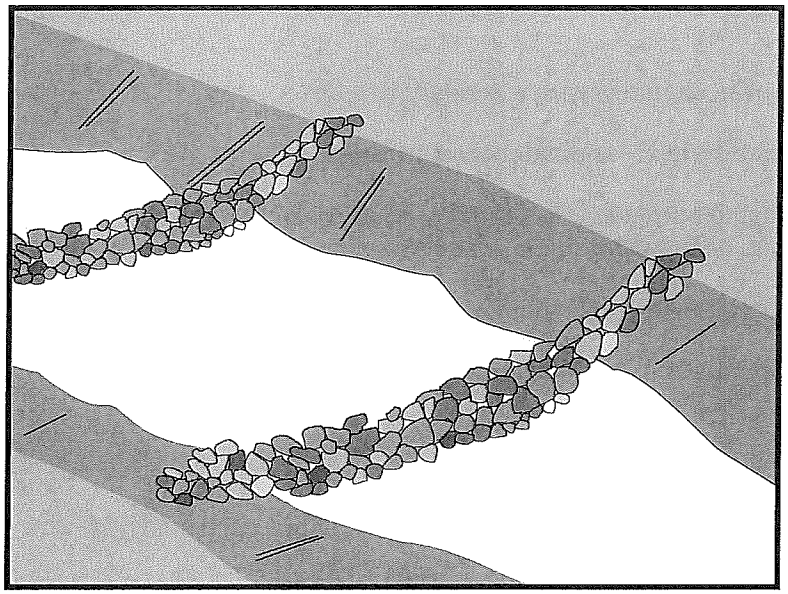

Categories

EC	Erosion Control	☒
SE	Sediment Control	☑
TC	Tracking Control	
WE	Wind Erosion Control	
NS	Non-Stormwater Management Control	
WM	Waste Management and Materials Pollution Control	

Legend:

☑ **Primary Category**

☒ **Secondary Category**

Targeted Constituents

Sediment	☑
Nutrients	
Trash	
Metals	
Bacteria	
Oil and Grease	
Organics	

Potential Alternatives

SE-5 Fiber Rolls

SE-6 Gravel Bag Berm

SE-8 Sandbag Barrier

SE-12 Manufactured Linear Sediment Controls

SE-14 Biofilter Bags

If User/Subscriber modifies this fact sheet in any way, the CASQA name/logo and footer below must be removed from each page and not appear on the modified version.

Description and Purpose

A check dam is a small barrier constructed of rock, gravel bags, sandbags, fiber rolls, or other proprietary products, placed across a constructed swale or drainage ditch. Check dams reduce the effective slope of the channel, thereby reducing scour and channel erosion by reducing flow velocity and increasing residence time within the channel, allowing sediment to settle.

Suitable Applications

Check dams may be appropriate in the following situations:

- To promote sedimentation behind the dam.
- To prevent erosion by reducing the velocity of channel flow in small intermittent channels and temporary swales.
- In small open channels that drain 10 acres or less.
- In steep channels where stormwater runoff velocities exceed 5 ft/s.
- During the establishment of grass linings in drainage ditches or channels.
- In temporary ditches where the short length of service does not warrant establishment of erosion-resistant linings.
- To act as a grade control structure.

Limitations

- Not to be used in live streams or in channels with extended base flows.
- Not appropriate in channels that drain areas greater than 10 acres.
- Not appropriate in channels that are already grass-lined unless erosion potential or sediment-laden flow is expected, as installation may damage vegetation.
- Require extensive maintenance following high velocity flows.
- Promotes sediment trapping which can be re-suspended during subsequent storms or removal of the check dam.
- Do not construct check dams with straw bales or silt fence.
- Water suitable for mosquito production may stand behind check dams, particularly if subjected to daily non-stormwater discharges.

Implementation

General

Check dams reduce the effective slope and create small pools in swales and ditches that drain 10 acres or less. Using check dams to reduce channel slope reduces the velocity of stormwater flows, thus reducing erosion of the swale or ditch and promoting sedimentation. Thus, check dams are dual-purpose and serve an important role as erosion controls as well as as sediment controls. Note that use of 1-2 isolated check dams for sedimentation will likely result in little net removal of sediment because of the small detention time and probable scour during longer storms. Using a series of check dams will generally increase their effectiveness. A sediment trap (SE-3) may be placed immediately upstream of the check dam to increase sediment removal efficiency.

Design and Layout

Check dams work by decreasing the effective slope in ditches and swales. An important consequence of the reduced slope is a reduction in capacity of the ditch or swale. This reduction in capacity should be considered when using this BMP, as reduced capacity can result in overtopping of the ditch or swale and resultant consequences. In some cases, such as a "permanent" ditch or swale being constructed early and used as a "temporary" conveyance for construction flows, the ditch or swale may have sufficient capacity such that the temporary reduction in capacity due to check dams is acceptable. When check dams reduce capacities beyond acceptable limits, either:

- Don't use check dams. Consider alternative BMPs, or.
- Increase the size of the ditch or swale to restore capacity.

Maximum slope and velocity reduction is achieved when the toe of the upstream dam is at the same elevation as the top of the downstream dam (see "Spacing Between Check Dams" detail at the end of this fact sheet). The center section of the dam should be lower than the edge sections (at least 6 inches), acting as a spillway, so that the check dam will direct flows to the center of

the ditch or swale (see "Typical Rock Check Dam" detail at the end of this fact sheet). Bypass or side-cutting can occur if a sufficient spillway is not provided in the center of the dam.

Check dams are usually constructed of rock, gravel bags, sandbags, and fiber rolls. A number of products can also be used as check dams (e.g. HDPE check dams, temporary silt dikes (SE-12)), and some of these products can be removed and reused. Check dams can also be constructed of logs or lumber, and have the advantage of a longer lifespan when compared to gravel bags, sandbags, and fiber rolls. Check dams should not be constructed from straw bales or silt fences, since concentrated flows quickly wash out these materials.

Rock check dams are usually constructed of 8 to 12 in. rock. The rock is placed either by hand or mechanically, but never just dumped into the channel. The dam should completely span the ditch or swale to prevent washout. The rock used should be large enough to stay in place given the expected design flow through the channel. It is recommended that abutments be extended 18 in. into the channel bank. Rock can be graded such that smaller diameter rock (e.g. 2-4 in) is located on the upstream side of larger rock (holding the smaller rock in place); increasing residence time.

Log check dams are usually constructed of 4 to 6 in. diameter logs, installed vertically. The logs should be embedded into the soil at least 18 in. Logs can be bolted or wired to vertical support logs that have been driven or buried into the soil.

See fiber rolls, SE-5, for installation of fiber roll check dams.

Gravel bag and sand bag check dams are constructed by stacking bags across the ditch or swale, shaped as shown in the drawings at the end of this fact sheet (see "Gravel Bag Check Dam" detail at the end of this fact sheet).

Manufactured products, such as temporary silt dikes (SE-12), should be installed in accordance with the manufacturer's instructions. Installation typically requires anchoring or trenching of products, as well as regular maintenance to remove accumulated sediment and debris.

If grass is planted to stabilize the ditch or swale, the check dam should be removed when the grass has matured (unless the slope of the swales is greater than 4%).

The following guidance should be followed for the design and layout of check dams:

- Install the first check dam approximately 16 ft from the outfall device and at regular intervals based on slope gradient and soil type.
- Check dams should be placed at a distance and height to allow small pools to form between each check dam.
- For multiple check dam installation, backwater from a downstream check dam should reach the toes of the upstream check dam.
- A sediment trap provided immediately upstream of the check dam will help capture sediment. Due to the potential for this sediment to be resuspended in subsequent storms, the sediment trap should be cleaned following each storm event.

- High flows (typically a 2-year storm or larger) should safely flow over the check dam without an increase in upstream flooding or damage to the check dam.
- Where grass is used to line ditches, check dams should be removed when grass has matured sufficiently to protect the ditch or swale.

Materials

- Rock used for check dams should typically be 8-12 in rock and be sufficiently sized to stay in place given expected design flows in the channel. Smaller diameter rock (e.g. 2 to 4 in) can be placed on the upstream side of larger rock to increase residence time.
- Gravel bags used for check dams should conform to the requirements of SE-6, Gravel Bag Berms.
- Sandbags used for check dams should conform to SE-8, Sandbag Barrier.
- Fiber rolls used for check dams should conform to SE-5, Fiber Rolls.
- Temporary silt dikes used for check dams should conform to SE-12, Temporary Silt Dikes.

Installation

- Rock should be placed individually by hand or by mechanical methods (no dumping of rock) to achieve complete ditch or swale coverage.
- Tightly abut bags and stack according to detail shown in the figure at the end of this section (pyramid approach). Gravel bags and sandbags should not be stacked any higher than 3 ft.
- Upper rows or gravel and sand bags shall overlap joints in lower rows.
- Fiber rolls should be trenched in, backfilled, and firmly staked in place.
- Install along a level contour.
- HDPE check dams, temporary silt dikes, and other manufactured products should be used and installed per manufacturer specifications.

Costs

Cost consists of labor costs if materials are readily available (such as gravel on-site). If material must be imported, costs will increase. For other material and installation costs, see SE-5, SE-6, SE-8, SE-12, and SE-14.

Inspection and Maintenance

- BMPs must be inspected in accordance with General Permit requirements for the associated project type and risk level. It is recommended that at a minimum, BMPs be inspected weekly, prior to forecasted rain events, daily during extended rain events, and after the conclusion of rain events.
- Replace missing rock, bags, rolls, etc. Replace bags or rolls that have degraded or have become damaged.

- If the check dam is used as a sediment capture device, sediment that accumulates behind the BMP should be periodically removed in order to maintain BMP effectiveness. Sediment should be removed when the sediment accumulation reaches one-third of the barrier height.
- If the check dam is used as a grade control structure, sediment removal is not required as long as the system continues to control the grade.
- Inspect areas behind check dams for pools of standing water, especially if subjected to daily non-stormwater discharges.
- Remove accumulated sediment prior to permanent seeding or soil stabilization.
- Remove check dam and accumulated sediment when check dams are no longer needed.

References

Draft – Sedimentation and Erosion Control, and Inventory of Current Practices, USEPA, April 1990.

Manual of Standards of Erosion and Sediment Control Measures, Association of Bay Area Governments, May 1995.

Stormwater Quality Handbooks - Construction Site Best Management Practices (BMPs) Manual, State of California Department of Transportation (Caltrans), March 2003.

Stormwater Management of the Puget Sound Basin, Technical Manual, Publication #91-75, Washington State Department of Ecology, February 1992.

Erosion and Sediment Control Manual, Oregon Department of Environmental Quality, February 2005.

Metzger, M.E. 2004. Managing mosquitoes in stormwater treatment devices. University of California Division of Agriculture and Natural Resources, Publication 8125. On-line: http://anrcatalog.ucdavis.edu/pdf/8125.pdf

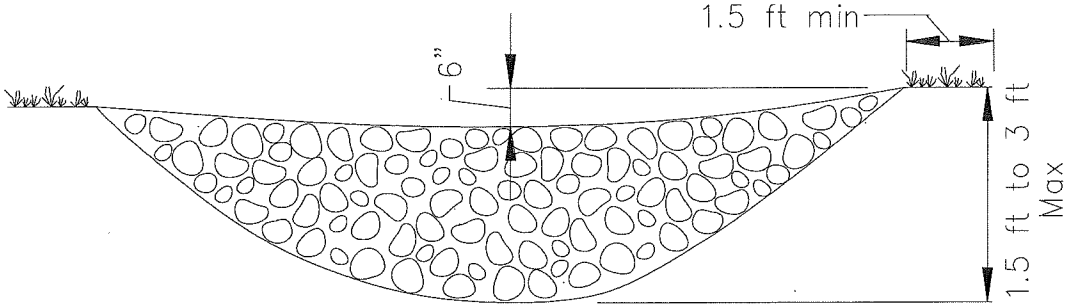

ELEVATION

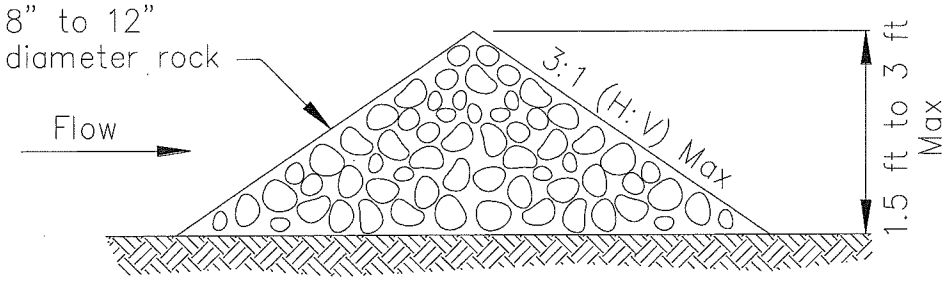

TYPICAL ROCK CHECK DAM SECTION

ROCK CHECK DAM
NOT TO SCALE

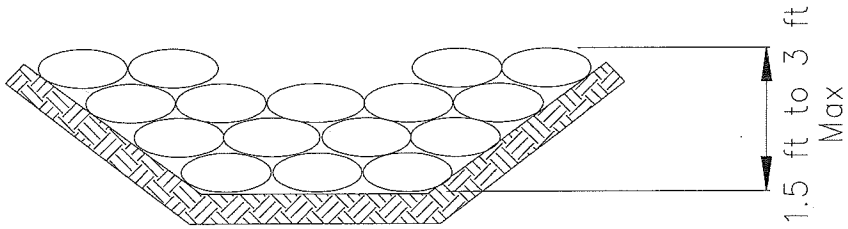

GRAVEL BAG CHECK DAM ELEVATION
NOT TO SCALE

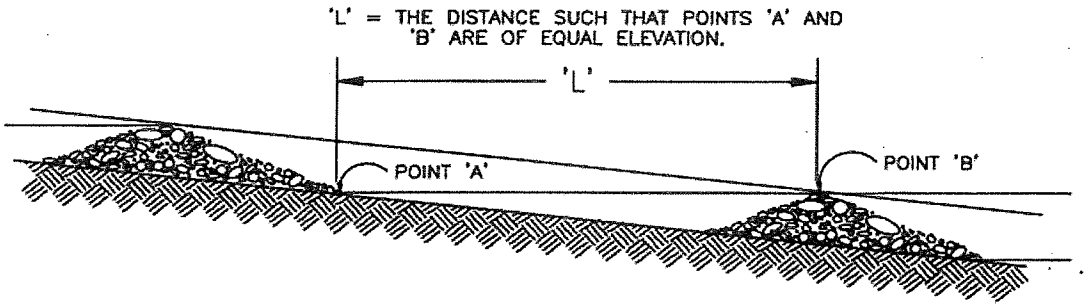

SPACING BETWEEN CHECK DAMS

Gravel Bag Berm

SE-6

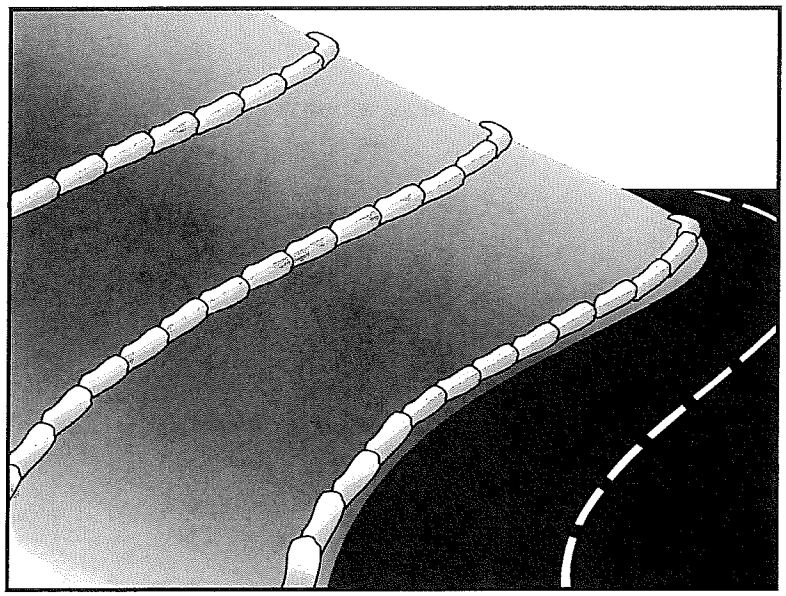

Categories

EC	Erosion Control	☒
SE	Sediment Control	☑
TC	Tracking Control	
WE	Wind Erosion Control	
NS	Non-Stormwater Management Control	
WM	Waste Management and Materials Pollution Control	

Legend:

☑ **Primary Category**

☒ **Secondary Category**

Description and Purpose

A gravel bag berm is a series of gravel-filled bags placed on a level contour to intercept sheet flows. Gravel bags pond sheet flow runoff, allowing sediment to settle out, and release runoff slowly as sheet flow, preventing erosion.

Suitable Applications

Gravel bag berms may be suitable:

- As a linear sediment control measure:
  - Below the toe of slopes and erodible slopes
  - As sediment traps at culvert/pipe outlets
  - Below other small cleared areas
  - Along the perimeter of a site
  - Down slope of exposed soil areas
  - Around temporary stockpiles and spoil areas
  - Parallel to a roadway to keep sediment off paved areas
  - Along streams and channels
- As a linear erosion control measure:
  - Along the face and at grade breaks of exposed and erodible slopes to shorten slope length and spread runoff as sheet flow.

Targeted Constituents

Sediment	☑
Nutrients	
Trash	
Metals	
Bacteria	
Oil and Grease	
Organics	

Potential Alternatives

SE-1 Silt Fence

SE-5 Fiber Roll

SE-8 Sandbag Barrier

SE-12 Temporary Silt Dike

SE-14 Biofilter Bags

If User/Subscriber modifies this fact sheet in any way, the CASQA name/logo and footer below must be removed from each page and not appear on the modified version.

CASQA
CALIFORNIA STORMWATER QUALITY ASSOCIATION

- At the top of slopes to divert runoff away from disturbed slopes.
- As chevrons (small check dams) across mildly sloped construction roads. For use check dam use in channels, see SE-4, Check Dams.

Limitations

- Gravel berms may be difficult to remove.
- Removal problems limit their usefulness in landscaped areas.
- Gravel bag berm may not be appropriate for drainage areas greater than 5 acres.
- Runoff will pond upstream of the berm, possibly causing flooding if sufficient space does not exist.
- Degraded gravel bags may rupture when removed, spilling contents.
- Installation can be labor intensive.
- Durability of gravel bags is somewhat limited and bags may need to be replaced when installation is required for longer than 6 months.
- Easily damaged by construction equipment.
- When used to detain concentrated flows, maintenance requirements increase.

Implementation

General

A gravel bag berm consists of a row of open graded gravel-filled bags placed on a level contour. When appropriately placed, a gravel bag berm intercepts and slows sheet flow runoff, causing temporary ponding. The temporary ponding allows sediment to settle. The open graded gravel in the bags is porous, which allows the ponded runoff to flow slowly through the bags, releasing the runoff as sheet flows. Gravel bag berms also interrupt the slope length and thereby reduce erosion by reducing the tendency of sheet flows to concentrate into rivulets, which erode rills, and ultimately gullies, into disturbed, sloped soils. Gravel bag berms are similar to sand bag barriers, but are more porous. Generally, gravel bag berms should be used in conjunction with temporary soil stabilization controls up slope to provide effective erosion and sediment control.

Design and Layout

- Locate gravel bag berms on level contours.
- When used for slope interruption, the following slope/sheet flow length combinations apply:
  - Slope inclination of 4:1 (H:V) or flatter: Gravel bags should be placed at a maximum interval of 20 ft, with the first row near the slope toe.
  - Slope inclination between 4:1 and 2:1 (H:V): Gravel bags should be placed at a maximum interval of 15 ft. (a closer spacing is more effective), with the first row near the slope toe.

Slope inclination 2:1 (H:V) or greater: Gravel bags should be placed at a maximum interval of 10 ft. (a closer spacing is more effective), with the first row near the slope toe.

- Turn the ends of the gravel bag barriers up slope to prevent runoff from going around the berm.
- Allow sufficient space up slope from the gravel bag berm to allow ponding, and to provide room for sediment storage.
- For installation near the toe of the slope, gravel bag barriers should be set back from the slope toe to facilitate cleaning. Where specific site conditions do not allow for a set-back, the gravel bag barrier may be constructed on the toe of the slope. To prevent flows behind the barrier, bags can be placed perpendicular to a berm to serve as cross barriers.
- Drainage area should not exceed 5 acres.
- In Non-Traffic Areas:
  - Height = 18 in. maximum
  - Top width = 24 in. minimum for three or more layer construction
  - Top width = 12 in. minimum for one or two layer construction
  - Side slopes = 2:1 (H:V) or flatter
- In Construction Traffic Areas:
  - Height = 12 in. maximum
  - Top width = 24 in. minimum for three or more layer construction.
  - Top width = 12 in. minimum for one or two layer construction.
  - Side slopes = 2:1 (H:V) or flatter.
- Butt ends of bags tightly.
- On multiple row, or multiple layer construction, overlap butt joints of adjacent row and row beneath.
- Use a pyramid approach when stacking bags.

Materials

- ***Bag Material:*** Bags should be woven polypropylene, polyethylene or polyamide fabric or burlap, minimum unit weight of 4 ounces/yd^2, Mullen burst strength exceeding 300 lb/in^2 in conformance with the requirements in ASTM designation D3786, and ultraviolet stability exceeding 70% in conformance with the requirements in ASTM designation D4355.

- ***Bag Size:*** Each gravel-filled bag should have a length of 18 in., width of 12 in., thickness of 3 in., and mass of approximately 33 lbs. Bag dimensions are nominal, and may vary based on locally available materials.

- ***Fill Material:*** Fill material should be 0.5 to 1 in. crushed rock, clean and free from clay, organic matter, and other deleterious material, or other suitable open graded, non-cohesive, porous gravel.

Costs

Material costs for gravel bags are average and are dependent upon material availability. $2.50-3.00 per filled gravel bag is standard based upon vendor research.

Inspection and Maintenance

- BMPs must be inspected in accordance with General Permit requirements for the associated project type and risk level. It is recommended that at a minimum, BMPs be inspected weekly, prior to forecasted rain events, daily during extended rain events, and after the conclusion of rain events.

- Gravel bags exposed to sunlight will need to be replaced every two to three months due to degrading of the bags.

- Reshape or replace gravel bags as needed.

- Repair washouts or other damage as needed.

- Sediment that accumulates in the BMP should be periodically removed in order to maintain BMP effectiveness. Sediment should be removed when the sediment accumulation reaches one-third of the barrier height.

- Remove gravel bag berms when no longer needed and recycle gravel fill whenever possible and properly dispose of bag material. Remove sediment accumulation and clean, re-grade, and stabilize the area.

References

Handbook of Steel Drainage and Highway Construction, American Iron and Steel Institute, 1983.

Stormwater Quality Handbooks - Construction Site Best Management Practices (BMPs) Manual, State of California Department of Transportation (Caltrans), March 2003.

Stormwater Pollution Plan Handbook, First Edition, State of California, Department of Transportation Division of New Technology, Materials and Research, October 1992.

Erosion and Sediment Control Manual, Oregon Department of Environmental Quality, February 2005.

Street Sweeping and Vacuuming SE-7

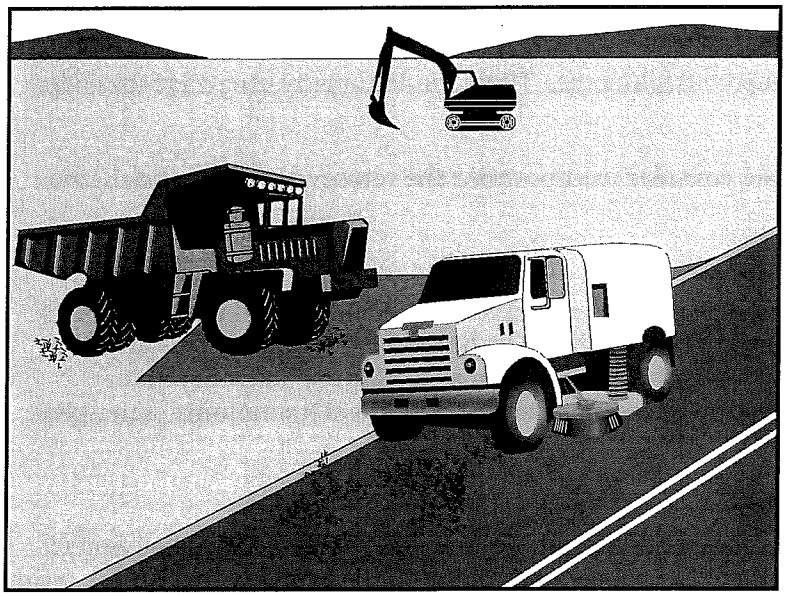

Categories

EC	Erosion Control	
SE	Sediment Control	☒
TC	Tracking Control	☑
WE	Wind Erosion Control	
NS	Non-Stormwater Management Control	
WM	Waste Management and Materials Pollution Control	

Legend:

☑ **Primary Objective**

☒ **Secondary Objective**

Targeted Constituents

Sediment	☑
Nutrients	
Trash	☑
Metals	
Bacteria	
Oil and Grease	☑
Organics	

Potential Alternatives

None

If User/Subscriber modifies this fact sheet in any way, the CASQA name/logo and footer below must be removed from each page and not appear on the modified version.

Description and Purpose

Street sweeping and vacuuming includes use of self-propelled and walk-behind equipment to remove sediment from streets and roadways, and to clean paved surfaces in preparation for final paving. Sweeping and vacuuming prevents sediment from the project site from entering storm drains or receiving waters.

Suitable Applications

Sweeping and vacuuming are suitable anywhere sediment is tracked from the project site onto public or private paved streets and roads, typically at points of egress. Sweeping and vacuuming are also applicable during preparation of paved surfaces for final paving.

Limitations

Sweeping and vacuuming may not be effective when sediment is wet or when tracked soil is caked (caked soil may need to be scraped loose).

Implementation

- Controlling the number of points where vehicles can leave the site will allow sweeping and vacuuming efforts to be focused, and perhaps save money.
- Inspect potential sediment tracking locations daily.
- Visible sediment tracking should be swept or vacuumed on a daily basis.

CASQA
CALIFORNIA STORMWATER QUALITY ASSOCIATION

- Do not use kick brooms or sweeper attachments. These tend to spread the dirt rather than remove it.
- If not mixed with debris or trash, consider incorporating the removed sediment back into the project

Costs

Rental rates for self-propelled sweepers vary depending on hopper size and duration of rental. Expect rental rates from $58/hour (3 yd^3 hopper) to $88/hour (9 yd^3 hopper), plus operator costs. Hourly production rates vary with the amount of area to be swept and amount of sediment. Match the hopper size to the area and expect sediment load to minimize time spent dumping.

Inspection and Maintenance

- Inspect BMPs in accordance with General Permit requirements for the associated project type and risk level. It is recommended that at a minimum, BMPs be inspected weekly, prior to forecasted rain events, daily during extended rain events, and after the conclusion of rain events.
- When actively in use, points of ingress and egress must be inspected daily.
- When tracked or spilled sediment is observed outside the construction limits, it must be removed at least daily. More frequent removal, even continuous removal, may be required in some jurisdictions.
- Be careful not to sweep up any unknown substance or any object that may be potentially hazardous.
- Adjust brooms frequently; maximize efficiency of sweeping operations.
- After sweeping is finished, properly dispose of sweeper wastes at an approved dumpsite.

References

Stormwater Quality Handbooks - Construction Site Best Management Practices (BMPs) Manual, State of California Department of Transportation (Caltrans), November 2000.

Labor Surcharge and Equipment Rental Rates, State of California Department of Transportation (Caltrans), April 1, 2002 – March 31, 2003.

Storm Drain Inlet Protection SE-10

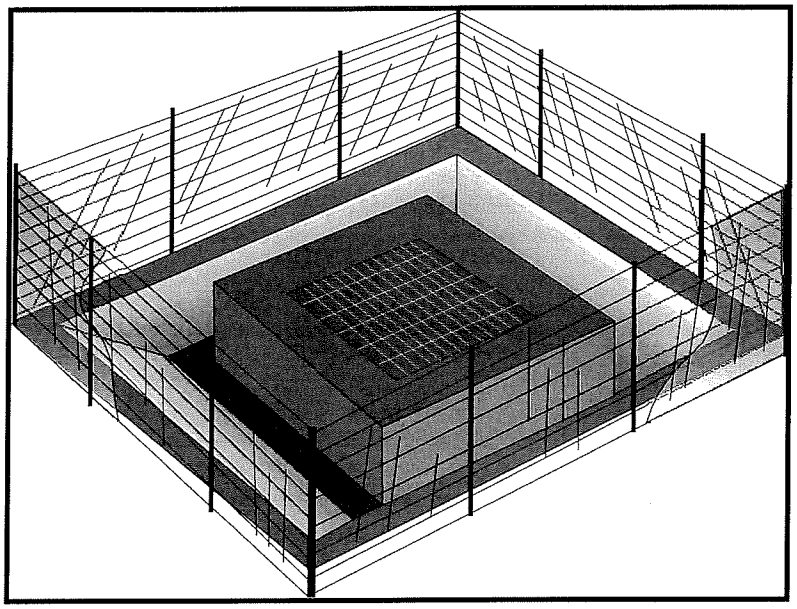

Categories

EC	Erosion Control	
SE	Sediment Control	☑
TC	Tracking Control	
WE	Wind Erosion Control	
NS	Non-Stormwater Management Control	
WM	Waste Management and Materials Pollution Control	

Legend:

☑ **Primary Category**

☒ **Secondary Category**

Targeted Constituents

Sediment	☑
Nutrients	
Trash	☒
Metals	
Bacteria	
Oil and Grease	
Organics	

Potential Alternatives

SE-1 Silt Fence

SE-5 Fiber Rolls

SE-6 Gravel Bag Berm

SE-8 Sandbag Barrier

SE-14 Biofilter Bags

SE-13 Compost Socks and Berms

If User/Subscriber modifies this fact sheet in any way, the CASQA name/logo and footer below must be removed from each page and not appear on the modified version.

Description and Purpose

Storm drain inlet protection consists of a sediment filter or an impounding area in, around or upstream of a storm drain, drop inlet, or curb inlet. Storm drain inlet protection measures temporarily pond runoff before it enters the storm drain, allowing sediment to settle. Some filter configurations also remove sediment by filtering, but usually the ponding action results in the greatest sediment reduction. Temporary geotextile storm drain inserts attach underneath storm drain grates to capture and filter storm water.

Suitable Applications

- Every storm drain inlet receiving runoff from unstabilized or otherwise active work areas should be protected. Inlet protection should be used in conjunction with other erosion and sediment controls to prevent sediment-laden stormwater and non-stormwater discharges from entering the storm drain system.

Limitations

- Drainage area should not exceed 1 acre.
- In general straw bales should not be used as inlet protection.
- Requires an adequate area for water to pond without encroaching into portions of the roadway subject to traffic.
- Sediment removal may be inadequate to prevent sediment discharges in high flow conditions or if runoff is heavily sediment laden. If high flow conditions are expected, use

CASQA
CALIFORNIA STORMWATER QUALITY ASSOCIATION

other onsite sediment trapping techniques in conjunction with inlet protection.

- Frequent maintenance is required.
- Limit drainage area to 1 acre maximum. For drainage areas larger than 1 acre, runoff should be routed to a sediment-trapping device designed for larger flows. See BMPs SE-2, Sediment Basin, and SE-3, Sediment Traps.
- Excavated drop inlet sediment traps are appropriate where relatively heavy flows are expected, and overflow capability is needed.

Implementation

General

Inlet control measures presented in this handbook should not be used for inlets draining more than one acre. Runoff from larger disturbed areas should be first routed through SE-2, Sediment Basin or SE-3, Sediment Trap and/or used in conjunction with other drainage control, erosion control, and sediment control BMPs to protect the site. Different types of inlet protection are appropriate for different applications depending on site conditions and the type of inlet. Alternative methods are available in addition to the methods described/shown herein such as prefabricated inlet insert devices, or gutter protection devices.

Design and Layout

Identify existing and planned storm drain inlets that have the potential to receive sediment-laden surface runoff. Determine if storm drain inlet protection is needed and which method to use.

- The key to successful and safe use of storm drain inlet protection devices is to know where runoff that is directed toward the inlet to be protected will pond or be diverted as a result of installing the protection device.
  - Determine the acceptable location and extent of ponding in the vicinity of the drain inlet. The acceptable location and extent of ponding will influence the type and design of the storm drain inlet protection device.
  - Determine the extent of potential runoff diversion caused by the storm drain inlet protection device. Runoff ponded by inlet protection devices may flow around the device and towards the next downstream inlet. In some cases, this is acceptable; in other cases, serious erosion or downstream property damage can be caused by these diversions. The possibility of runoff diversions will influence whether or not storm drain inlet protection is suitable; and, if suitable, the type and design of the device.
- The location and extent of ponding, and the extent of diversion, can usually be controlled through appropriate placement of the inlet protection device. In some cases, moving the inlet protection device a short distance upstream of the actual inlet can provide more efficient sediment control, limit ponding to desired areas, and prevent or control diversions.
- Seven types of inlet protection are presented below. However, it is recognized that other effective methods and proprietary devices exist and may be selected.

- Silt Fence: Appropriate for drainage basins with less than a 5% slope, sheet flows, and flows under 0.5 cfs.
- Excavated Drop Inlet Sediment Trap: An excavated area around the inlet to trap sediment (SE-3).
- Gravel bag barrier: Used to create a small sediment trap upstream of inlets on sloped, paved streets. Appropriate for sheet flow or when concentrated flow may exceed 0.5 cfs, and where overtopping is required to prevent flooding.
- Block and Gravel Filter: Appropriate for flows greater than 0.5 cfs.
- Temporary Geotextile Storm drain Inserts: Different products provide different features. Refer to manufacturer details for targeted pollutants and additional features.
- Biofilter Bag Barrier: Used to create a small retention area upstream of inlets and can be located on pavement or soil. Biofilter bags slowly filter runoff allowing sediment to settle out. Appropriate for flows under 0.5 cfs.
- Compost Socks: Allow filtered run-off to pass through the compost while retaining sediment and potentially other pollutants (SE-13). Appropriate for flows under 1.0 cfs.

- Select the appropriate type of inlet protection and design as referred to or as described in this fact sheet.
- Provide area around the inlet for water to pond without flooding structures and property.
- Grates and spaces around all inlets should be sealed to prevent seepage of sediment-laden water.
- Excavate sediment sumps (where needed) 1 to 2 ft with 2:1 side slopes around the inlet.

Installation

- ***DI Protection Type 1 - Silt Fence*** - Similar to constructing a silt fence; see BMP SE-1, Silt Fence. Do not place fabric underneath the inlet grate since the collected sediment may fall into the drain inlet when the fabric is removed or replaced and water flow through the grate will be blocked resulting in flooding. See typical Type 1 installation details at the end of this fact sheet.

  1. Excavate a trench approximately 6 in. wide and 6 in. deep along the line of the silt fence inlet protection device.
  2. Place 2 in. by 2 in. wooden stakes around the perimeter of the inlet a maximum of 3 ft apart and drive them at least 18 in. into the ground or 12 in. below the bottom of the trench. The stakes should be at least 48 in.
  3. Lay fabric along bottom of trench, up side of trench, and then up stakes. See SE-1, Silt Fence, for details. The maximum silt fence height around the inlet is 24 in.
  4. Staple the filter fabric (for materials and specifications, see SE-1, Silt Fence) to wooden stakes. Use heavy-duty wire staples at least 1 in. in length.

5. Backfill the trench with gravel or compacted earth all the way around.

- ***DI Protection Type 2 - Excavated Drop Inlet Sediment Trap*** - Install filter fabric fence in accordance with DI Protection Type 1. Size excavated trap to provide a minimum storage capacity calculated at the rate 67 yd^3/acre of drainage area. See typical Type 2 installation details at the end of this fact sheet.

- ***DI Protection Type 3 - Gravel bag*** - Flow from a severe storm should not overtop the curb. In areas of high clay and silts, use filter fabric and gravel as additional filter media. Construct gravel bags in accordance with SE-6, Gravel Bag Berm. Gravel bags should be used due to their high permeability. See typical Type 3 installation details at the end of this fact sheet.

  1. Construct on gently sloping street.

  2. Leave room upstream of barrier for water to pond and sediment to settle.

  3. Place several layers of gravel bags – overlapping the bags and packing them tightly together.

  4. Leave gap of one bag on the top row to serve as a spillway. Flow from a severe storm (e.g., 10 year storm) should not overtop the curb.

- ***DI Protection Type 4 – Block and Gravel Filter*** - Block and gravel filters are suitable for curb inlets commonly used in residential, commercial, and industrial construction. See typical Type 4 installation details at the end of this fact sheet.

  1. Place hardware cloth or comparable wire mesh with 0.5 in. openings over the drop inlet so that the wire extends a minimum of 1 ft beyond each side of the inlet structure. If more than one strip is necessary, overlap the strips. Place woven geotextile over the wire mesh.

  2. Place concrete blocks lengthwise on their sides in a single row around the perimeter of the inlet, so that the open ends face outward, not upward. The ends of adjacent blocks should abut. The height of the barrier can be varied, depending on design needs, by stacking combinations of blocks that are 4 in., 8 in., and 12 in. wide. The row of blocks should be at least 12 in. but no greater than 24 in. high.

  3. Place wire mesh over the outside vertical face (open end) of the concrete blocks to prevent stone from being washed through the blocks. Use hardware cloth or comparable wire mesh with 0.5 in. opening.

  4. Pile washed stone against the wire mesh to the top of the blocks. Use 0.75 to 3 in.

- ***DI Protection Type 5 – Temporary Geotextile Insert (proprietary)*** – Many types of temporary inserts are available. Most inserts fit underneath the grate of a drop inlet or inside of a curb inlet and are fastened to the outside of the grate or curb. These inserts are removable and many can be cleaned and reused. Installation of these inserts differs between manufacturers. Please refer to manufacturer instruction for installation of proprietary devices.

- ***DI Protection Type 6 - Biofilter bags*** – Biofilter bags may be used as a substitute for gravel bags in low-flow situations. Biofilter bags should conform to specifications detailed in SE-14, Biofilter bags.

  1. Construct in a gently sloping area.
  2. Biofilter bags should be placed around inlets to intercept runoff flows.
  3. All bag joints should overlap by 6 in.
  4. Leave room upstream for water to pond and for sediment to settle out.
  5. Stake bags to the ground as described in the following detail. Stakes may be omitted if bags are placed on a paved surface.

- ***DI Protection Type 7 – Compost Socks*** – A compost sock can be assembled on site by filling a mesh sock (e.g., with a pneumatic blower). Compost socks do not require special trenching compared to other sediment control methods (e.g., silt fence). Compost socks should conform to specification detailed in SE-13, Compost Socks and Berms.

Costs

- Average annual cost for installation and maintenance of DI Type 1-4 and 6 (one year useful life) is $200 per inlet.
- Temporary geotextile inserts are proprietary and cost varies by region. These inserts can often be reused and may have greater than 1 year of use if maintained and kept undamaged. Average cost per insert ranges from $50-75 plus installation, but costs can exceed $100. This cost does not include maintenance.
- See SE-13 for Compost Sock cost information.

Inspection and Maintenance

- BMPs must be inspected in accordance with General Permit requirements for the associated project type and risk level. It is recommended that at a minimum, BMPs be inspected weekly, prior to forecasted rain events, daily during extended rain events, and after the conclusion of rain events.
- Silt Fences. If the fabric becomes clogged, torn, or degrades, it should be replaced. Make sure the stakes are securely driven in the ground and are in good shape (i.e., not bent, cracked, or splintered, and are reasonably perpendicular to the ground). Replace damaged stakes. At a minimum, remove the sediment behind the fabric fence when accumulation reaches one-third the height of the fence or barrier height.
- Gravel Filters. If the gravel becomes clogged with sediment, it should be carefully removed from the inlet and either cleaned or replaced. Since cleaning gravel at a construction site may be difficult, consider using the sediment-laden stone as fill material and put fresh stone around the inlet. Inspect bags for holes, gashes, and snags, and replace bags as needed. Check gravel bags for proper arrangement and displacement.

- Sediment that accumulates in the BMP should be periodically removed in order to maintain BMP effectiveness. Sediment should be removed when the sediment accumulation reaches one-third of the barrier height.
- Inspect and maintain temporary geotextile insert devices according to manufacturer's specifications.
- Remove storm drain inlet protection once the drainage area is stabilized.
  - Clean and regrade area around the inlet and clean the inside of the storm drain inlet, as it should be free of sediment and debris at the time of final inspection.

References

Stormwater Quality Handbooks - Construction Site Best Management Practices (BMPs) Manual, State of California Department of Transportation (Caltrans), March 2003.

Stormwater Management Manual for The Puget Sound Basin, Washington State Department of Ecology, Public Review Draft, 1991.

Erosion and Sediment Control Manual, Oregon Department of Environmental Quality, February 2005.

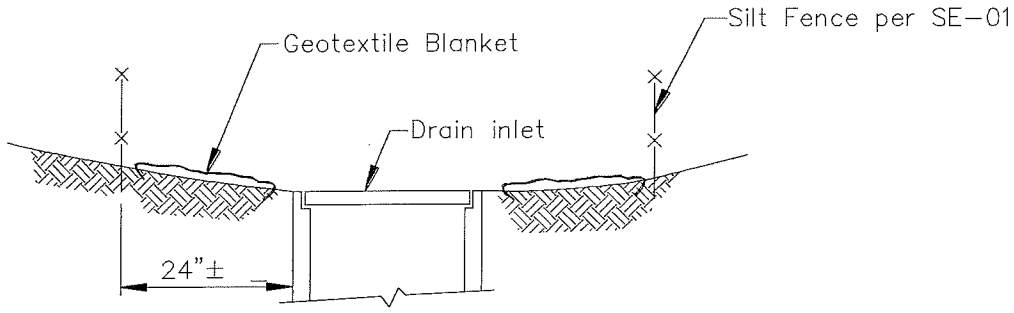

SECTION A–A

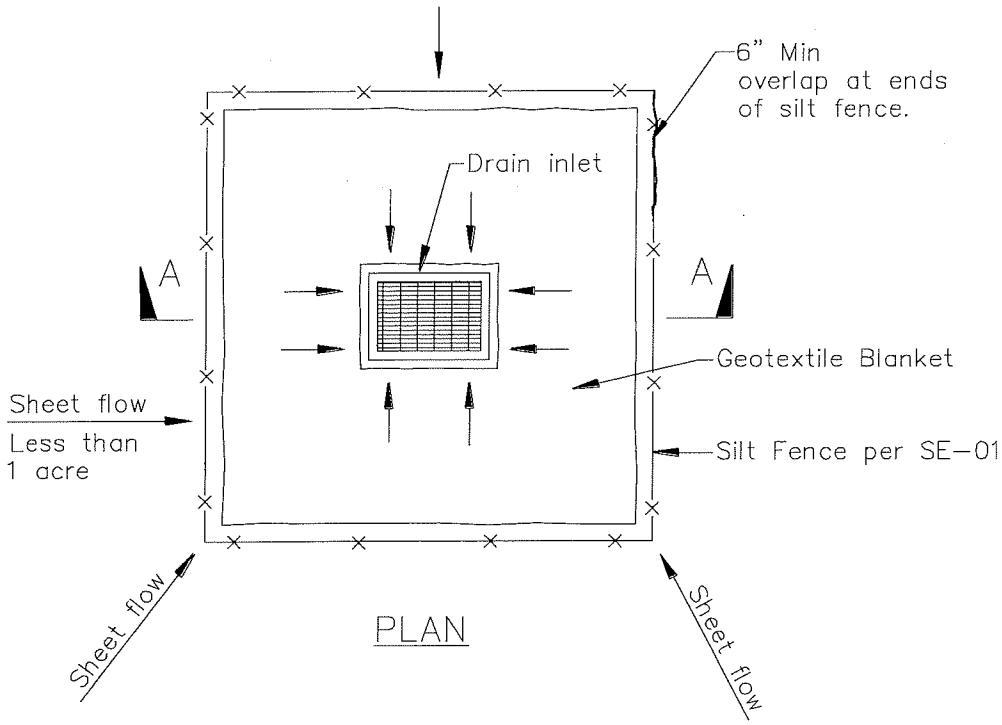

PLAN

DI PROTECTION TYPE 1
NOT TO SCALE

NOTES:

1. For use in areas where grading has been completed and final soil stabilization and seeding are pending.
2. Not applicable in paved areas.
3. Not applicable with concentrated flows.

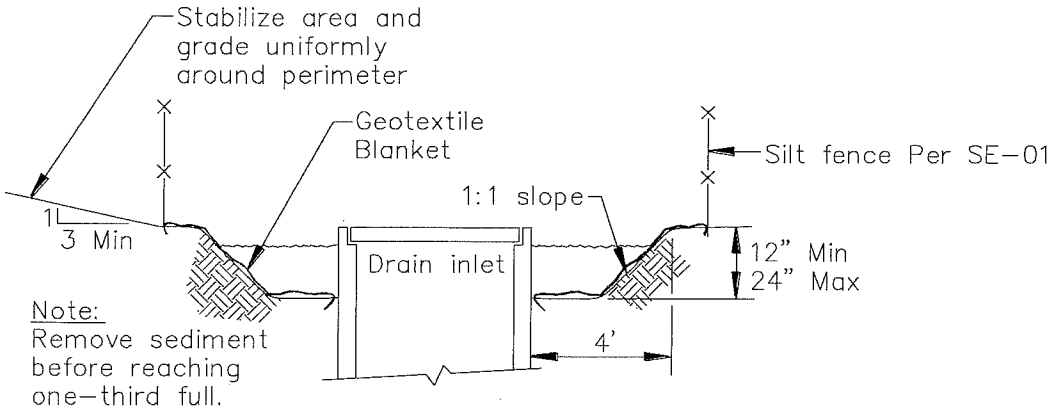

Section A–A

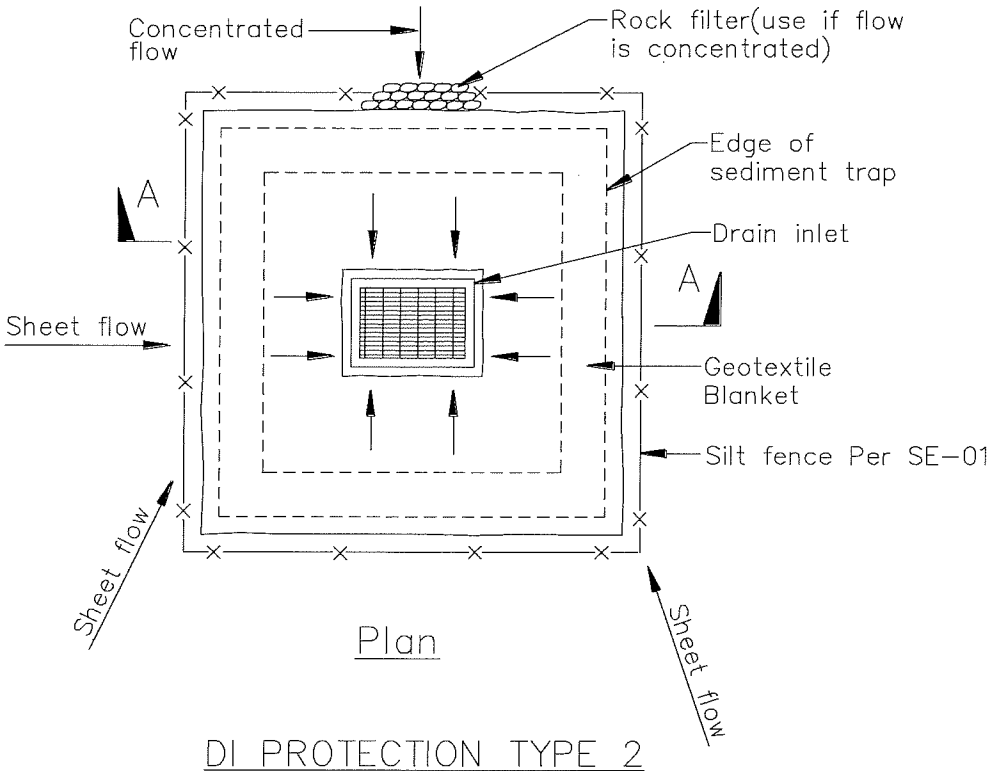

Plan

DI PROTECTION TYPE 2
NOT TO SCALE

Notes
1. For use in cleared and grubbed and in graded areas.
2. Shape basin so that longest inflow area faces longest length of trap.
3. For concentrated flows, shape basin in 2:1 ratio with length oriented towards direction of flow.

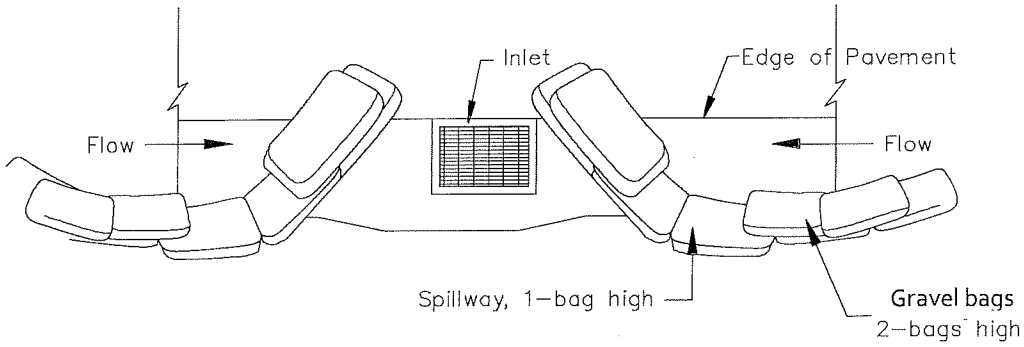

TYPICAL PROTECTION FOR INLET ON SUMP

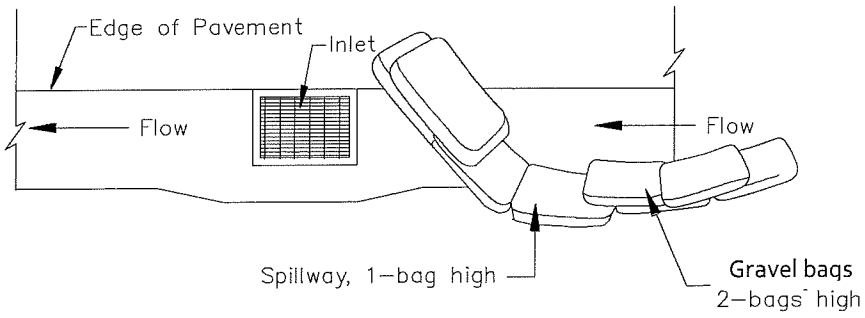

TYPICAL PROTECTION FOR INLET ON GRADE

NOTES:

1. Intended for short-term use.
2. Use to inhibit non-storm water flow.
3. Allow for proper maintenance and cleanup.
4. Bags must be removed after adjacent operation is completed
5. Not applicable in areas with high silts and clays without filter fabric.
6. Protection can be effective even if it is not immediately adjacent to the inlet provided that the inlet is protected from potential sources of pollution.

DI PROTECTION TYPE 3
NOT TO SCALE

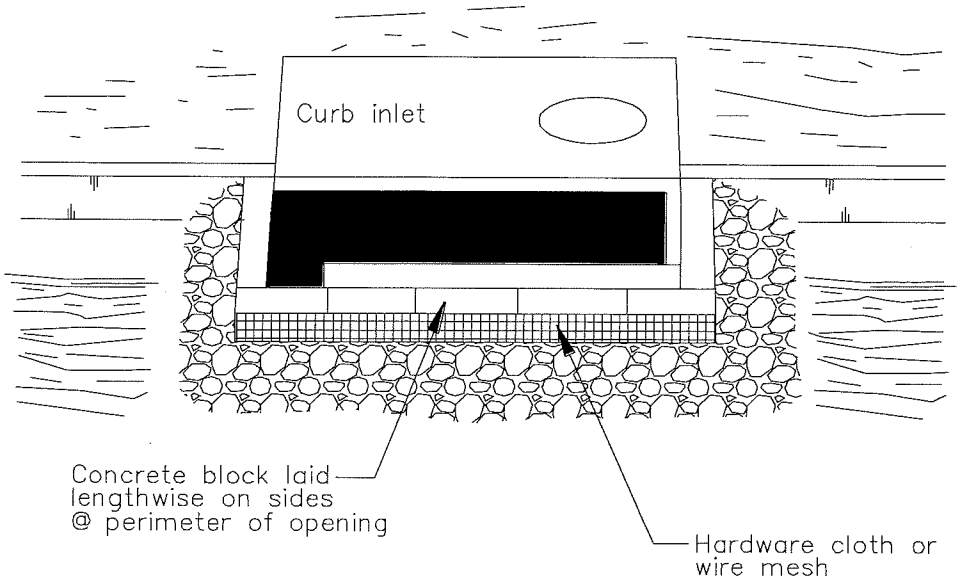

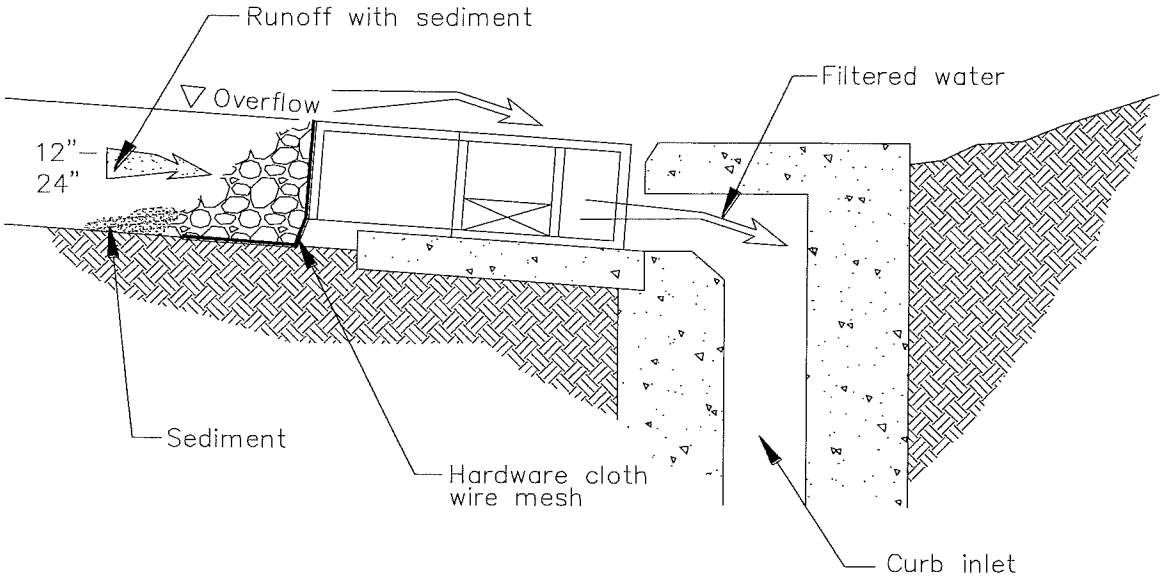

DI PROTECTION – TYPE 4

NOT TO SCALE

Stabilized Construction Entrance/Exit TC-1

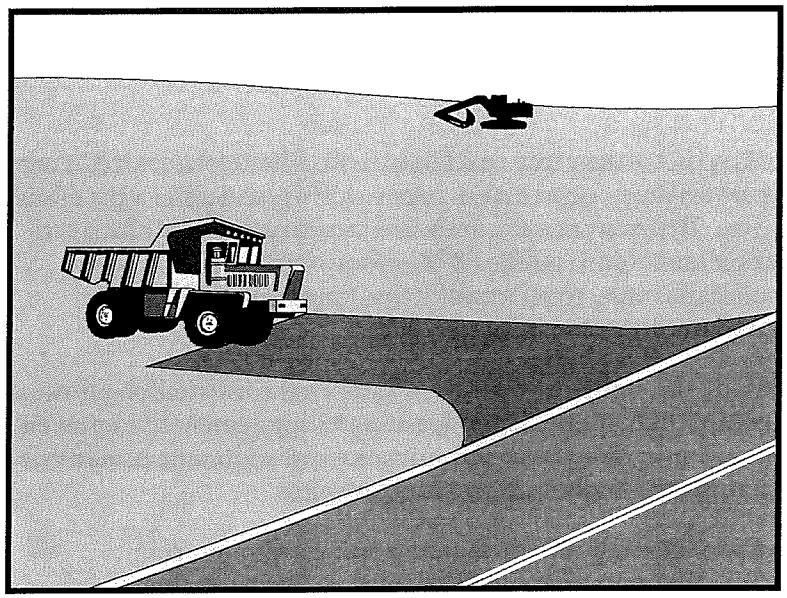

Categories

EC	Erosion Control	☒
SE	Sediment Control	☒
TC	Tracking Control	☑
WE	Wind Erosion Control	
NS	Non-Stormwater Management Control	
WM	Waste Management and Materials Pollution Control	

Legend:

☑ **Primary Objective**

☒ **Secondary Objective**

Targeted Constituents

Sediment	☑
Nutrients	
Trash	
Metals	
Bacteria	
Oil and Grease	
Organics	

Potential Alternatives

None

If User/Subscriber modifies this fact sheet in any way, the CASQA name/logo and footer below must be removed from each page and not appear on the modified version.

Description and Purpose

A stabilized construction access is defined by a point of entrance/exit to a construction site that is stabilized to reduce the tracking of mud and dirt onto public roads by construction vehicles.

Suitable Applications

Use at construction sites:

- Where dirt or mud can be tracked onto public roads.
- Adjacent to water bodies.
- Where poor soils are encountered.
- Where dust is a problem during dry weather conditions.

Limitations

- Entrances and exits require periodic top dressing with additional stones.
- This BMP should be used in conjunction with street sweeping on adjacent public right of way.
- Entrances and exits should be constructed on level ground only.
- Stabilized construction entrances are rather expensive to construct and when a wash rack is included, a sediment trap of some kind must also be provided to collect wash water runoff.

CASQA
CALIFORNIA STORMWATER QUALITY ASSOCIATION

Implementation

General

A stabilized construction entrance is a pad of aggregate underlain with filter cloth located at any point where traffic will be entering or leaving a construction site to or from a public right of way, street, alley, sidewalk, or parking area. The purpose of a stabilized construction entrance is to reduce or eliminate the tracking of sediment onto public rights of way or streets. Reducing tracking of sediments and other pollutants onto paved roads helps prevent deposition of sediments into local storm drains and production of airborne dust.

Where traffic will be entering or leaving the construction site, a stabilized construction entrance should be used. NPDES permits require that appropriate measures be implemented to prevent tracking of sediments onto paved roadways, where a significant source of sediments is derived from mud and dirt carried out from unpaved roads and construction sites.

Stabilized construction entrances are moderately effective in removing sediment from equipment leaving a construction site. The entrance should be built on level ground. Advantages of the Stabilized Construction Entrance/Exit is that it does remove some sediment from equipment and serves to channel construction traffic in and out of the site at specified locations. Efficiency is greatly increased when a washing rack is included as part of a stabilized construction entrance/exit.

Design and Layout

- Construct on level ground where possible.
- Select 3 to 6 in. diameter stones.
- Use minimum depth of stones of 12 in. or as recommended by soils engineer.
- Construct length of 50 ft or maximum site will allow, and 10 ft minimum width or to accommodate traffic.
- Rumble racks constructed of steel panels with ridges and installed in the stabilized entrance/exit will help remove additional sediment and to keep adjacent streets clean.
- Provide ample turning radii as part of the entrance.
- Limit the points of entrance/exit to the construction site.
- Limit speed of vehicles to control dust.
- Properly grade each construction entrance/exit to prevent runoff from leaving the construction site.
- Route runoff from stabilized entrances/exits through a sediment trapping device before discharge.
- Design stabilized entrance/exit to support heaviest vehicles and equipment that will use it.

- Select construction access stabilization (aggregate, asphaltic concrete, concrete) based on longevity, required performance, and site conditions. Do not use asphalt concrete (AC) grindings for stabilized construction access/roadway.
- If aggregate is selected, place crushed aggregate over geotextile fabric to at least 12 in. depth, or place aggregate to a depth recommended by a geotechnical engineer. A crushed aggregate greater than 3 in. but smaller than 6 in. should be used.
- Designate combination or single purpose entrances and exits to the construction site.
- Require that all employees, subcontractors, and suppliers utilize the stabilized construction access.
- Implement SE-7, Street Sweeping and Vacuuming, as needed.
- All exit locations intended to be used for more than a two-week period should have stabilized construction entrance/exit BMPs.

Inspection and Maintenance

- Inspect and verify that activity–based BMPs are in place prior to the commencement of associated activities. While activities associated with the BMPs are under way, inspect BMPs in accordance with General Permit requirements for the associated project type and risk level. It is recommended that at a minimum, BMPs be inspected weekly, prior to forecasted rain events, daily during extended rain events, and after the conclusion of rain events.
- Inspect local roads adjacent to the site daily. Sweep or vacuum to remove visible accumulated sediment.
- Remove aggregate, separate and dispose of sediment if construction entrance/exit is clogged with sediment.
- Keep all temporary roadway ditches clear.
- Check for damage and repair as needed.
- Replace gravel material when surface voids are visible.
- Remove all sediment deposited on paved roadways within 24 hours.
- Remove gravel and filter fabric at completion of construction

Costs

Average annual cost for installation and maintenance may vary from $1,200 to $4,800 each, averaging $2,400 per entrance. Costs will increase with addition of washing rack, and sediment trap. With wash rack, costs range from $1,200 - $6,000 each, averaging $3,600 per entrance.

References

Manual of Standards of Erosion and Sediment Control Measures, Association of Bay Area Governments, May 1995.

National Management Measures to Control Nonpoint Source Pollution from Urban Areas, USEPA Agency, 2002.

Proposed Guidance Specifying Management Measures for Sources of Nonpoint Pollution in Coastal Waters, Work Group Working Paper, USEPA, April 1992.

Stormwater Quality Handbooks Construction Site Best Management Practices (BMPs) Manual, State of California Department of Transportation (Caltrans), November 2000.

Stormwater Management of the Puget Sound Basin, Technical Manual, Publication #91-75, Washington State Department of Ecology, February 1992.

Virginia Erosion and Sedimentation Control Handbook, Virginia Department of Conservation and Recreation, Division of Soil and Water Conservation, 1991.

Guidance Specifying Management Measures for Nonpoint Pollution in Coastal Waters, EPA 840-B-9-002, USEPA, Office of Water, Washington, DC, 1993.

Water Quality Management Plan for the Lake Tahoe Region, Volume II, Handbook of Management Practices, Tahoe Regional Planning Agency, November 1988.

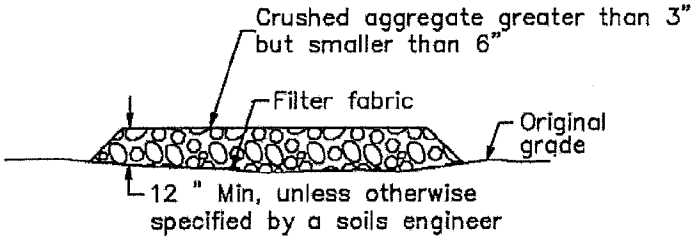

SECTION B–B
NTS

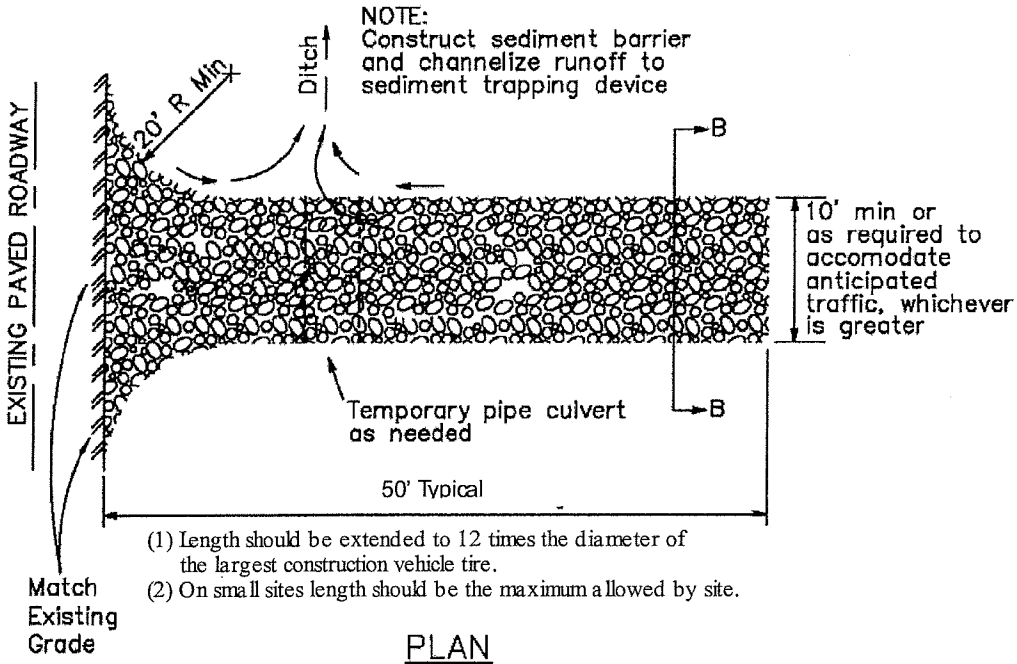

(1) Length should be extended to 12 times the diameter of the largest construction vehicle tire.
(2) On small sites length should be the maximum allowed by site.

PLAN
NTS

Stabilized Construction Entrance/Exit TC-1

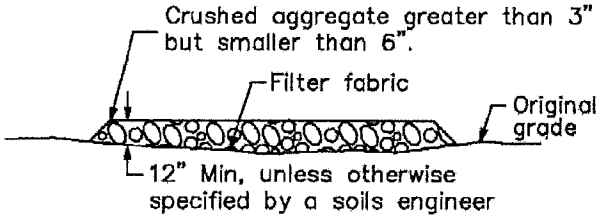

SECTION B–B
NTS

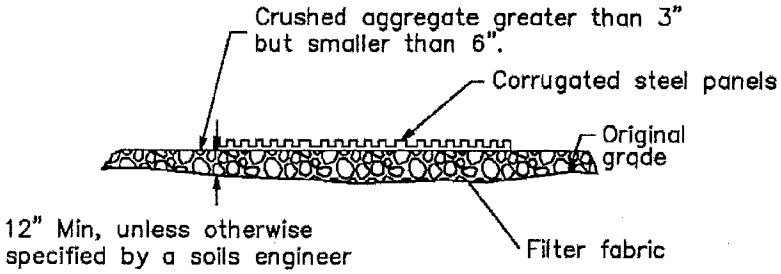

SECTION A–A
NOT TO SCALE

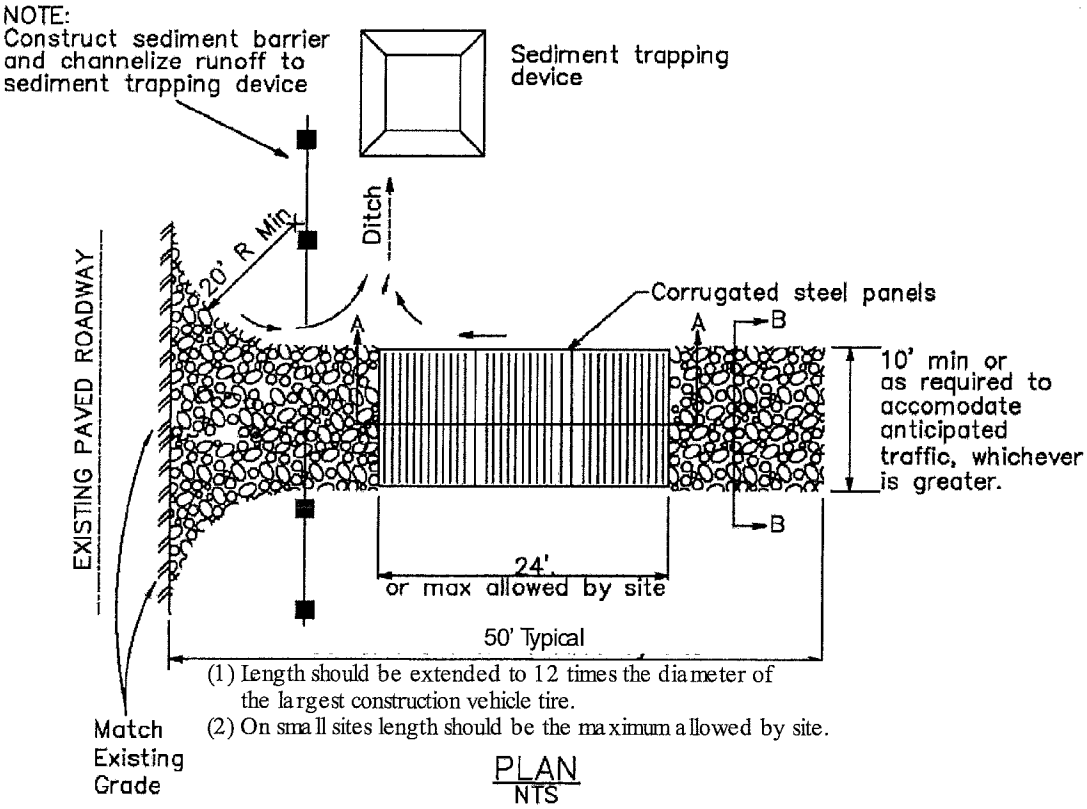

PLAN
NTS

Wind Erosion Control WE-1

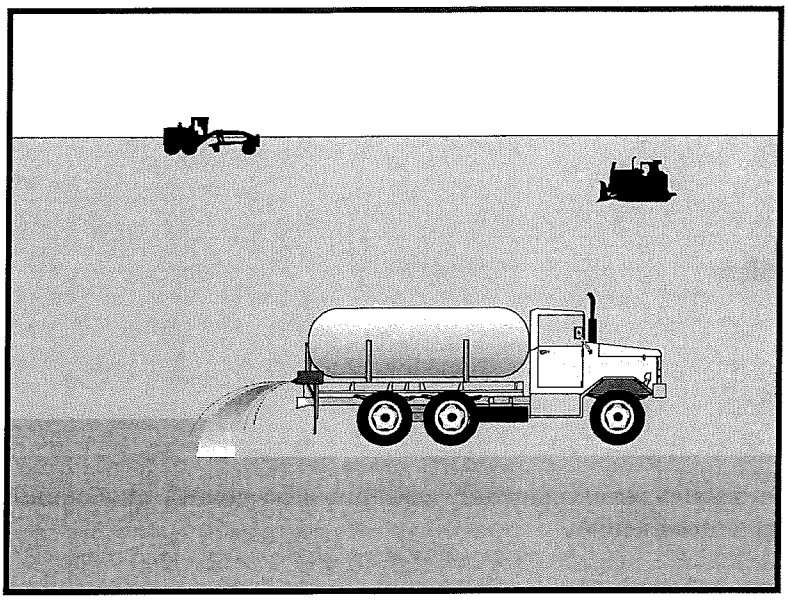

Categories

EC	Erosion Control	
SE	Sediment Control	☒
TC	Tracking Control	
WE	Wind Erosion Control	☑
NS	Non-Stormwater Management Control	
WM	Waste Management and Materials Pollution Control	

Legend:

☑ **Primary Category**

☒ **Secondary Category**

Targeted Constituents

Sediment	☑
Nutrients	
Trash	
Metals	
Bacteria	
Oil and Grease	
Organics	

Potential Alternatives

EC-5 Soil Binders

If User/Subscriber modifies this fact sheet in any way, the CASQA name/logo and footer below must be removed from each page and not appear on the modified version.

Description and Purpose

Wind erosion or dust control consists of applying water or other chemical dust suppressants as necessary to prevent or alleviate dust nuisance generated by construction activities. Covering small stockpiles or areas is an alternative to applying water or other dust palliatives.

California's Mediterranean climate, with a short "wet" season and a typically long, hot "dry" season, allows the soils to thoroughly dry out. During the dry season, construction activities are at their peak, and disturbed and exposed areas are increasingly subject to wind erosion, sediment tracking and dust generated by construction equipment. Site conditions and climate can make dust control more of an erosion problem than water based erosion. Additionally, many local agencies, including Air Quality Management Districts, require dust control and/or dust control permits in order to comply with local nuisance laws, opacity laws (visibility impairment) and the requirements of the Clean Air Act. Wind erosion control is required to be implemented at all construction sites greater than 1 acre by the General Permit.

Suitable Applications

Most BMPs that provide protection against water-based erosion will also protect against wind-based erosion and dust control requirements required by other agencies will generally meet wind erosion control requirements for water quality protection. Wind erosion control BMPs are suitable during the following construction activities:

CASQA
CALIFORNIA STORMWATER QUALITY ASSOCIATION

- Construction vehicle traffic on unpaved roads
- Drilling and blasting activities
- Soils and debris storage piles
- Batch drop from front-end loaders
- Areas with unstabilized soil
- Final grading/site stabilization

Limitations

- Watering prevents dust only for a short period (generally less than a few hours) and should be applied daily (or more often) to be effective.
- Over watering may cause erosion and track-out.
- Oil or oil-treated subgrade should not be used for dust control because the oil may migrate into drainageways and/or seep into the soil.
- Chemical dust suppression agents may have potential environmental impacts. Selected chemical dust control agents should be environmentally benign.
- Effectiveness of controls depends on soil, temperature, humidity, wind velocity and traffic.
- Chemical dust suppression agents should not be used within 100 feet of wetlands or water bodies.
- Chemically treated subgrades may make the soil water repellant, interfering with long-term infiltration and the vegetation/re-vegetation of the site. Some chemical dust suppressants may be subject to freezing and may contain solvents and should be handled properly.
- In compacted areas, watering and other liquid dust control measures may wash sediment or other constituents into the drainage system.
- If the soil surface has minimal natural moisture, the affected area may need to be pre-wetted so that chemical dust control agents can uniformly penetrate the soil surface.

Implementation

Dust Control Practices

Dust control BMPs generally stabilize exposed surfaces and minimize activities that suspend or track dust particles. The following table presents dust control practices that can be applied to varying site conditions that could potentially cause dust. For heavily traveled and disturbed areas, wet suppression (watering), chemical dust suppression, gravel asphalt surfacing, temporary gravel construction entrances, equipment wash-out areas, and haul truck covers can be employed as dust control applications. Permanent or temporary vegetation and mulching can be employed for areas of occasional or no construction traffic. Preventive measures include minimizing surface areas to be disturbed, limiting onsite vehicle traffic to 15 mph or less, and controlling the number and activity of vehicles on a site at any given time.

Chemical dust suppressants include: mulch and fiber based dust palliatives (e.g. paper mulch with gypsum binder), salts and brines (e.g. calcium chloride, magnesium chloride), non-petroleum based organics (e.g. vegetable oil, lignosulfonate), petroleum based organics (e.g. asphalt emulsion, dust oils, petroleum resins), synthetic polymers (e.g. polyvinyl acetate, vinyls, acrylic), clay additives (e.g. bentonite, montimorillonite) and electrochemical products (e.g. enzymes, ionic products).

Site Condition	Dust Control Practices							
	Permanent Vegetation	Mulching	Wet Suppression (Watering)	Chemical Dust Suppression	Gravel or Asphalt	Temporary Gravel Construction Entrances/Equipment Wash Down	Synthetic Covers	Minimize Extent of Disturbed Area
Disturbed Areas not Subject to Traffic	X	X	X	X	X			X
Disturbed Areas Subject to Traffic			X	X	X	X		X
Material Stockpiles		X	X	X			X	X
Demolition			X			X	X	
Clearing/ Excavation			X	X				X
Truck Traffic on Unpaved Roads			X	X	X	X	X	
Tracking					X	X		

Additional preventive measures include:

- Schedule construction activities to minimize exposed area (see EC-1, Scheduling).
- Quickly treat exposed soils using water, mulching, chemical dust suppressants, or stone/gravel layering.
- Identify and stabilize key access points prior to commencement of construction.
- Minimize the impact of dust by anticipating the direction of prevailing winds.
- Restrict construction traffic to stabilized roadways within the project site, as practicable.
- Water should be applied by means of pressure-type distributors or pipelines equipped with a spray system or hoses and nozzles that will ensure even distribution.
- All distribution equipment should be equipped with a positive means of shutoff.
- Unless water is applied by means of pipelines, at least one mobile unit should be available at all times to apply water or dust palliative to the project.
- If reclaimed waste water is used, the sources and discharge must meet California Department of Health Services water reclamation criteria and the Regional Water Quality

Control Board (RWQCB) requirements. Non-potable water should not be conveyed in tanks or drain pipes that will be used to convey potable water and there should be no connection between potable and non-potable supplies. Non-potable tanks, pipes, and other conveyances should be marked, "NON-POTABLE WATER - DO NOT DRINK."

- Pave or chemically stabilize access points where unpaved traffic surfaces adjoin paved roads.
- Provide covers for haul trucks transporting materials that contribute to dust.
- Provide for rapid clean up of sediments deposited on paved roads. Furnish stabilized construction road entrances and wheel wash areas.
- Stabilize inactive areas of construction sites using temporary vegetation or chemical stabilization methods.

For chemical stabilization, there are many products available for chemically stabilizing gravel roadways and stockpiles. If chemical stabilization is used, the chemicals should not create any adverse effects on stormwater, plant life, or groundwater and should meet all applicable regulatory requirements.

Costs

Installation costs for water and chemical dust suppression vary based on the method used and the length of effectiveness. Annual costs may be high since some of these measures are effective for only a few hours to a few days.

Inspection and Maintenance

- Inspect and verify that activity-based BMPs are in place prior to the commencement of associated activities.
- BMPs must be inspected in accordance with General Permit requirements for the associated project type and risk level. It is recommended that at a minimum, BMPs be inspected weekly, prior to forecasted rain events, daily during extended rain events, and after the conclusion of rain events.
- Check areas protected to ensure coverage.
- Most water-based dust control measures require frequent application, often daily or even multiple times per day. Obtain vendor or independent information on longevity of chemical dust suppressants.

References

Best Management Practices and Erosion Control Manual for Construction Sites, Flood Control District of Maricopa County, Arizona, September 1992.

California Air Pollution Control Laws, California Air Resources Board, updated annually.

Construction Manual, Chapter 4, Section 10, "Dust Control"; Section 17, "Watering"; and Section 18, "Dust Palliative", California Department of Transportation (Caltrans), July 2001.

Prospects for Attaining the State Ambient Air Quality Standards for Suspended Particulate Matter (PM10), Visibility Reducing Particles, Sulfates, Lead, and Hydrogen Sulfide, California Air Resources Board, April 1991.

Stormwater Quality Handbooks Construction Site Best Management Practices (BMPs) Manual, State of California Department of Transportation (Caltrans), March 2003.

Water Conservation Practices NS-1

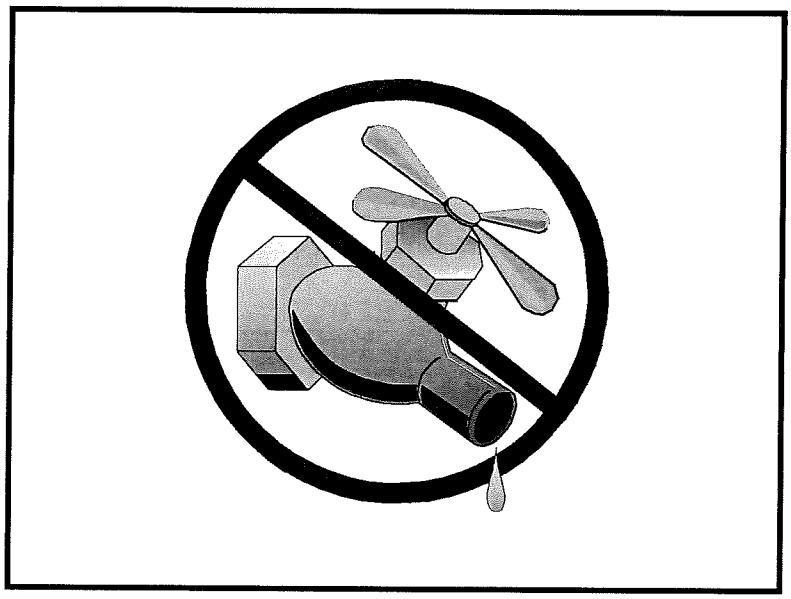

Categories

EC	Erosion Control	☒
SE	Sediment Control	☒
TC	Tracking Control	
WE	Wind Erosion Control	
NS	Non-Stormwater Management Control	☑
WM	Waste Management and Materials Pollution Control	

Legend:

☑ **Primary Objective**

☒ **Secondary Objective**

Targeted Constituents

Sediment	☑
Nutrients	
Trash	
Metals	
Bacteria	
Oil and Grease	
Organics	

Potential Alternatives

None

If User/Subscriber modifies this fact sheet in any way, the CASQA name/logo and footer below must be removed from each page and not appear on the modified version.

Description and Purpose

Water conservation practices are activities that use water during the construction of a project in a manner that avoids causing erosion and the transport of pollutants offsite. These practices can reduce or eliminate non-stormwater discharges.

Suitable Applications

Water conservation practices are suitable for all construction sites where water is used, including piped water, metered water, trucked water, and water from a reservoir.

Limitations

- None identified.

Implementation

- Keep water equipment in good working condition.
- Stabilize water truck filling area.
- Repair water leaks promptly.
- Washing of vehicles and equipment on the construction site is discouraged.
- Avoid using water to clean construction areas. If water must be used for cleaning or surface preparation, surface should be swept and vacuumed first to remove dirt. This will minimize amount of water required.

CASQA
CALIFORNIA STORMWATER QUALITY ASSOCIATION

- Direct construction water runoff to areas where it can soak into the ground or be collected and reused.
- Authorized non-stormwater discharges to the storm drain system, channels, or receiving waters are acceptable with the implementation of appropriate BMPs.
- Lock water tank valves to prevent unauthorized use.

Costs

The cost is small to none compared to the benefits of conserving water.

Inspection and Maintenance

- Inspect and verify that activity based BMPs are in place prior to the commencement of authorized non-stormwater discharges.
- Inspect BMPs in accordance with General Permit requirements for the associated project type and risk level. It is recommended that at a minimum, BMPs be inspected weekly, prior to forecasted rain events, daily during extended rain events, and after the conclusion of rain events.
- Inspect BMPs subject to non-stormwater discharges daily while non-stormwater discharges are occuring.
- Repair water equipment as needed to prevent unintended discharges.
  - Water trucks
  - Water reservoirs (water buffalos)
  - Irrigation systems
  - Hydrant connections

References

Stormwater Quality Handbooks - Construction Site Best Management Practices (BMPs) Manual, State of California Department of Transportation (Caltrans), November 2000.

Paving and Grinding Operations NS-3

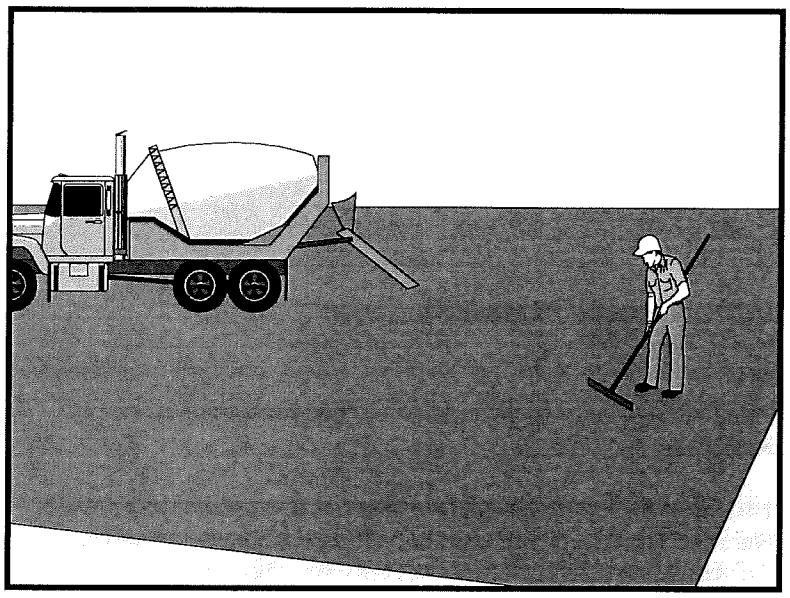

Categories		
EC	Erosion Control	
SE	Sediment Control	
TC	Tracking Control	
WE	Wind Erosion Control	
NS	Non-Stormwater Management Control	☑
WM	Waste Management and Materials Pollution Control	☒

Legend:
☑ **Primary Category**
☒ **Secondary Category**

Targeted Constituents	
Sediment	☑
Nutrients	
Trash	
Metals	
Bacteria	
Oil and Grease	☑
Organics	

Potential Alternatives

None

If User/Subscriber modifies this fact sheet in any way, the CASQA name/logo and footer below must be removed from each page and not appear on the modified version.

Description and Purpose

Prevent or reduce the discharge of pollutants from paving operations, using measures to prevent runon and runoff pollution, properly disposing of wastes, and training employees and subcontractors.

The General Permit incorporates Numeric Action Levels (NAL) for pH and turbidity (see Section 2 of this handbook to determine your project's risk level and if you are subject to these requirements).

Many types of construction materials associated with paving and grinding operations, including mortar, concrete, and cement and their associated wastes have basic chemical properties that can raise pH levels outside of the permitted range. Additional care should be taken when managing these materials to prevent them from coming into contact with stormwater flows, which could lead to exceedances of the General Permit requirements.

Suitable Applications

These procedures are implemented where paving, surfacing, resurfacing, or sawcutting, may pollute stormwater runoff or discharge to the storm drain system or watercourses.

Limitations

- Paving opportunities may be limited during wet weather.

  Discharges of freshly paved surfaces may raise pH to environmentally harmful levels and trigger permit violations.

CASQA
CALIFORNIA STORMWATER QUALITY ASSOCIATION

Implementation

General

- Avoid paving during the wet season when feasible.
- Reschedule paving and grinding activities if rain is forecasted.
- Train employees and sub-contractors in pollution prevention and reduction.
- Store materials away from drainage courses to prevent stormwater runon (see WM-1, Material Delivery and Storage).
- Protect drainage courses, particularly in areas with a grade, by employing BMPs to divert runoff or to trap and filter sediment.
- Stockpile material removed from roadways away from drain inlets, drainage ditches, and watercourses. These materials should be stored consistent with WM-3, Stockpile Management.
- Disposal of PCC (Portland cement concrete) and AC (asphalt concrete) waste should be in conformance with WM-8, Concrete Waste Management.

Saw Cutting, Grinding, and Pavement Removal

- Shovel or vacuum saw-cut slurry and remove from site. Cover or barricade storm drains during saw cutting to contain slurry.
- When paving involves AC, the following steps should be implemented to prevent the discharge of grinding residue, uncompacted or loose AC, tack coats, equipment cleaners, or unrelated paving materials:
  - AC grindings, pieces, or chunks used in embankments or shoulder backing should not be allowed to enter any storm drains or watercourses. Install inlet protection and perimeter controls until area is stabilized (i.e. cutting, grinding or other removal activities are complete and loose material has been properly removed and disposed of)or permanent controls are in place. Examples of temporary perimeter controls can be found in EC-9, Earth Dikes and Drainage Swales; SE-1, Silt Fence; SE-5, Fiber Rolls, or SE-13 Compost Socks and Berms
  - Collect and remove all broken asphalt and recycle when practical. Old or spilled asphalt should be recycled or disposed of properly.
- Do not allow saw-cut slurry to enter storm drains or watercourses. Residue from grinding operations should be picked up by a vacuum attachment to the grinding machine, or by sweeping, should not be allowed to flow across the pavement, and should not be left on the surface of the pavement. See also WM-8, Concrete Waste Management, and WM-10, Liquid Waste Management.
- Pavement removal activities should not be conducted in the rain.
- Collect removed pavement material by mechanical or manual methods. This material may be recycled for use as shoulder backing or base material.

- If removed pavement material cannot be recycled, transport the material back to an approved storage site.

Asphaltic Concrete Paving

- If paving involves asphaltic cement concrete, follow these steps:
  - Do not allow sand or gravel placed over new asphalt to wash into storm drains, streets, or creeks. Vacuum or sweep loose sand and gravel and properly dispose of this waste by referring to WM-5, Solid Waste Management.
  - Old asphalt should be disposed of properly. Collect and remove all broken asphalt from the site and recycle whenever possible.

Portland Cement Concrete Paving

- Do not wash sweepings from exposed aggregate concrete into a storm drain system. Collect waste materials by dry methods, such as sweeping or shoveling, and return to aggregate base stockpile or dispose of properly. Allow aggregate rinse to settle. Then, either allow rinse water to dry in a temporary pit as described in WM-8, Concrete Waste Management, or pump the water to the sanitary sewer if authorized by the local wastewater authority.

Sealing Operations

- During chip seal application and sweeping operations, petroleum or petroleum covered aggregate should not be allowed to enter any storm drain or water courses. Apply temporary perimeter controls until structure is stabilized (i.e. all sealing operations are complete and cured and loose materials have been properly removed and disposed).
- Inlet protection (SE-10, Storm Drain Inlet Protection) should be used during application of seal coat, tack coat, slurry seal, and fog seal.
- Seal coat, tack coat, slurry seal, or fog seal should not be applied if rainfall is predicted to occur during the application or curing period.

Paving Equipment

- Leaks and spills from paving equipment can contain toxic levels of heavy metals and oil and grease. Place drip pans or absorbent materials under paving equipment when not in use. Clean up spills with absorbent materials and dispose of in accordance with the applicable regulations. See NS-10, Vehicle and Equipment Maintenance, WM-4, Spill Prevention and Control, and WM-10, Liquid Waste Management.
- Substances used to coat asphalt transport trucks and asphalt spreading equipment should not contain soap and should be non-foaming and non-toxic.
- Paving equipment parked onsite should be parked over plastic to prevent soil contamination.
- Clean asphalt coated equipment offsite whenever possible. When cleaning dry, hardened asphalt from equipment, manage hardened asphalt debris as described in WM-5, Solid Waste Management. Any cleaning onsite should follow NS-8, Vehicle and Equipment Cleaning.

Thermoplastic Striping

- Thermoplastic striper and pre-heater equipment shutoff valves should be inspected to ensure that they are working properly to prevent leaking thermoplastic from entering drain inlets, the stormwater drainage system, or watercourses.
- Pre-heaters should be filled carefully to prevent splashing or spilling of hot thermoplastic. Leave six inches of space at the top of the pre-heater container when filling thermoplastic to allow room for material to move.
- Do not pre-heat, transfer, or load thermoplastic near drain inlets or watercourses.
- Clean truck beds daily of loose debris and melted thermoplastic. When possible, recycle thermoplastic material.

Raised/Recessed Pavement Marker Application and Removal

- Do not transfer or load bituminous material near drain inlets, the stormwater drainage system, or watercourses.
- Melting tanks should be loaded with care and not filled to beyond six inches from the top to leave room for splashing.
- When servicing or filling melting tanks, ensure all pressure is released before removing lids to avoid spills.
- On large-scale projects, use mechanical or manual methods to collect excess bituminous material from the roadway after removal of markers.

Costs

- All of the above are low cost measures.

Inspection and Maintenance

- Inspect and verify that activity-based BMPs are in place prior to the commencement of paving and grinding operations.
- BMPs must be inspected in accordance with General Permit requirements for the associated project type and risk level. It is recommended that at a minimum, BMPs be inspected weekly, prior to forecasted rain events, daily during extended rain events, and after the conclusion of rain events.
- Sample stormwater runoff required by the General Permit.
- Keep ample supplies of drip pans or absorbent materials onsite.
- Inspect and maintain machinery regularly to minimize leaks and drips.

References

Blueprint for a Clean Bay: Best Management Practices to Prevent Stormwater Pollution from Construction Related Activities; Santa Clara Valley Nonpoint Source Pollution Control Program, 1995.

Hot Mix Asphalt-Paving Handbook AC 150/5370-14, Appendix I, U.S. Army Corps of Engineers, July 1991.

Stormwater Quality Handbooks - Construction Site Best Management Practices (BMPs) Manual, State of California Department of Transportation (Caltrans), March 2003.

Erosion and Sediment Control Manual, Oregon Department of Environmental Quality, February 2005.

Illicit Connection/Discharge NS-6

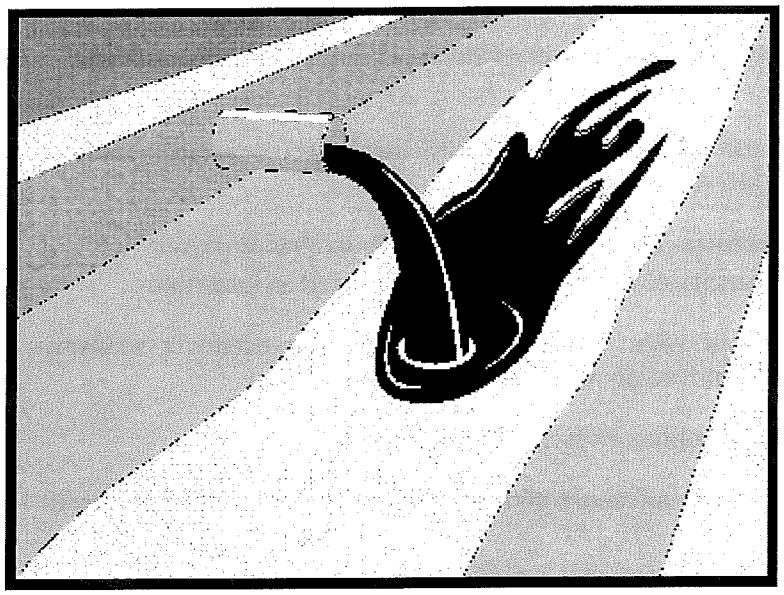

Categories

EC	Erosion Control	
SE	Sediment Control	
TC	Tracking Control	
WE	Wind Erosion Control	
NS	Non-Stormwater Management Control	☑
WM	Waste Management and Materials Pollution Control	

Legend:

☑ **Primary Objective**

☒ **Secondary Objective**

Targeted Constituents

Sediment	
Nutrients	☑
Trash	☑
Metals	☑
Bacteria	☑
Oil and Grease	☑
Organics	☑

Potential Alternatives

None

If User/Subscriber modifies this fact sheet in any way, the CASQA name/logo and footer below must be removed from each page and not appear on the modified version.

Description and Purpose

Procedures and practices designed for construction contractors to recognize illicit connections or illegally dumped or discharged materials on a construction site and report incidents.

Suitable Applications

This best management practice (BMP) applies to all construction projects. Illicit connection/discharge and reporting is applicable anytime an illicit connection or discharge is discovered or illegally dumped material is found on the construction site.

Limitations

Illicit connections and illegal discharges or dumping, for the purposes of this BMP, refer to discharges and dumping caused by parties other than the contractor. If pre-existing hazardous materials or wastes are known to exist onsite, they should be identified in the SWPPP and handled as set forth in the SWPPP.

Implementation

Planning

- Review the SWPPP. Pre-existing areas of contamination should be identified and documented in the SWPPP.
- Inspect site before beginning the job for evidence of illicit connections, illegal dumping or discharges. Document any pre-existing conditions and notify the owner.

CASQA
CALIFORNIA STORMWATER QUALITY ASSOCIATION

- Inspect site regularly during project execution for evidence of illicit connections, illegal dumping or discharges.
- Observe site perimeter for evidence for potential of illicitly discharged or illegally dumped material, which may enter the job site.

Identification of Illicit Connections and Illegal Dumping or Discharges

- **General** – unlabeled and unidentifiable material should be treated as hazardous.
- **Solids** - Look for debris, or rubbish piles. Solid waste dumping often occurs on roadways with light traffic loads or in areas not easily visible from the traveled way.
- **Liquids** - signs of illegal liquid dumping or discharge can include:
  - Visible signs of staining or unusual colors to the pavement or surrounding adjacent soils
  - Pungent odors coming from the drainage systems
  - Discoloration or oily substances in the water or stains and residues detained within ditches, channels or drain boxes
  - Abnormal water flow during the dry weather season
- **Urban Areas** - Evidence of illicit connections or illegal discharges is typically detected at storm drain outfall locations or at manholes. Signs of an illicit connection or illegal discharge can include:
  - Abnormal water flow during the dry weather season
  - Unusual flows in sub drain systems used for dewatering
  - Pungent odors coming from the drainage systems
  - Discoloration or oily substances in the water or stains and residues detained within ditches, channels or drain boxes
  - Excessive sediment deposits, particularly adjacent to or near active offsite construction projects
- **Rural Areas** - Illicit connections or illegal discharges involving irrigation drainage ditches are detected by visual inspections. Signs of an illicit discharge can include:
  - Abnormal water flow during the non-irrigation season
  - Non-standard junction structures
  - Broken concrete or other disturbances at or near junction structures

Reporting

Notify the owner of any illicit connections and illegal dumping or discharge incidents at the time of discovery. For illicit connections or discharges to the storm drain system, notify the local stormwater management agency. For illegal dumping, notify the local law enforcement agency.

Cleanup and Removal

The responsibility for cleanup and removal of illicit or illegal dumping or discharges will vary by location. Contact the local stormwater management agency for further information.

Costs

Costs to look for and report illicit connections and illegal discharges and dumping are low. The best way to avoid costs associated with illicit connections and illegal discharges and dumping is to keep the project perimeters secure to prevent access to the site, to observe the site for vehicles that should not be there, and to document any waste or hazardous materials that exist onsite before taking possession of the site.

Inspection and Maintenance

- Inspect and verify that activity-based BMPs are in place prior to the commencement of associated activities. While activities associated with the BMP are under way, inspect BMPs in accordance with General Permit requirements for the associated project type and risk level. It is recommended that at a minimum, BMPs be inspected weekly, prior to forecasted rain events, daily during extended rain events, and after the conclusion of rain events.
- Inspect the site regularly to check for any illegal dumping or discharge.
- Prohibit employees and subcontractors from disposing of non-job related debris or materials at the construction site.
- Notify the owner of any illicit connections and illegal dumping or discharge incidents at the time of discovery.

References

Blueprint for a Clean Bay: Best Management Practices to Prevent Stormwater Pollution from Construction Related Activities; Santa Clara Valley Nonpoint Source Pollution Control Program, 1995.

Stormwater Quality Handbooks - Construction Site Best Management Practices (BMPs) Manual, State of California Department of Transportation (Caltrans), November 2000.

Stormwater Management for Construction Activities, Developing Pollution Prevention Plans and Best Management Practices, EPA 832-R-92005; USEPA, April 1992.

Vehicle and Equipment Fueling NS-9

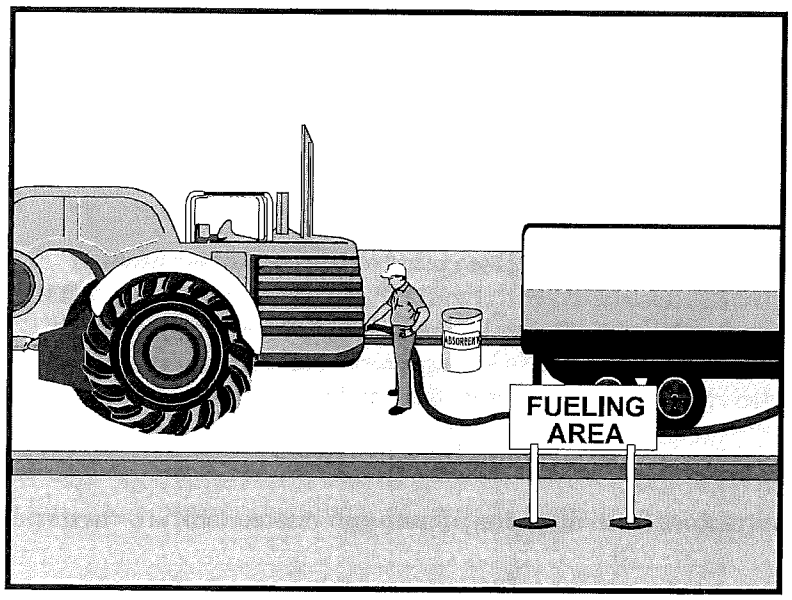

Categories

EC	Erosion Control	
SE	Sediment Control	
TC	Tracking Control	
WE	Wind Erosion Control	
NS	Non-Stormwater Management Control	☑
WM	Waste Management and Materials Pollution Control	

Legend:

☑ **Primary Objective**

☒ **Secondary Objective**

Targeted Constituents

Sediment	
Nutrients	
Trash	
Metals	
Bacteria	
Oil and Grease	☑
Organics	

Potential Alternatives

None

If User/Subscriber modifies this fact sheet in any way, the CASQA name/logo and footer below must be removed from each page and not appear on the modified version.

Description and Purpose

Vehicle equipment fueling procedures and practices are designed to prevent fuel spills and leaks, and reduce or eliminate contamination of stormwater. This can be accomplished by using offsite facilities, fueling in designated areas only, enclosing or covering stored fuel, implementing spill controls, and training employees and subcontractors in proper fueling procedures.

Suitable Applications

These procedures are suitable on all construction sites where vehicle and equipment fueling takes place.

Limitations

Onsite vehicle and equipment fueling should only be used where it is impractical to send vehicles and equipment offsite for fueling. Sending vehicles and equipment offsite should be done in conjunction with TC-1, Stabilized Construction Entrance/ Exit.

Implementation

- Use offsite fueling stations as much as possible. These businesses are better equipped to handle fuel and spills properly. Performing this work offsite can also be economical by eliminating the need for a separate fueling area at a site.
- Discourage "topping-off" of fuel tanks.

CASQA
CALIFORNIA STORMWATER QUALITY ASSOCIATION

- Absorbent spill cleanup materials and spill kits should be available in fueling areas and on fueling trucks, and should be disposed of properly after use.
- Drip pans or absorbent pads should be used during vehicle and equipment fueling, unless the fueling is performed over an impermeable surface in a dedicated fueling area.
- Use absorbent materials on small spills. Do not hose down or bury the spill. Remove the adsorbent materials promptly and dispose of properly.
- Avoid mobile fueling of mobile construction equipment around the site; rather, transport the equipment to designated fueling areas. With the exception of tracked equipment such as bulldozers and large excavators, most vehicles should be able to travel to a designated area with little lost time.
- Train employees and subcontractors in proper fueling and cleanup procedures.
- When fueling must take place onsite, designate an area away from drainage courses to be used. Fueling areas should be identified in the SWPPP.
- Dedicated fueling areas should be protected from stormwater runon and runoff, and should be located at least 50 ft away from downstream drainage facilities and watercourses. Fueling must be performed on level-grade areas.
- Protect fueling areas with berms and dikes to prevent runon, runoff, and to contain spills.
- Nozzles used in vehicle and equipment fueling should be equipped with an automatic shutoff to control drips. Fueling operations should not be left unattended.
- Use vapor recovery nozzles to help control drips as well as air pollution where required by Air Quality Management Districts (AQMD).
- Federal, state, and local requirements should be observed for any stationary above ground storage tanks.

Costs

- All of the above measures are low cost except for the capital costs of above ground tanks that meet all local environmental, zoning, and fire codes.

Inspection and Maintenance

- Inspect BMPs in accordance with General Permit requirements for the associated project type and risk level. It is recommended that at a minimum, BMPs be inspected weekly, prior to forecasted rain events, daily during extended rain events, and after the conclusion of rain events.
- Vehicles and equipment should be inspected each day of use for leaks. Leaks should be repaired immediately or problem vehicles or equipment should be removed from the project site.
- Keep ample supplies of spill cleanup materials onsite.

- Immediately clean up spills and properly dispose of contaminated soil and cleanup materials.

References

Blueprint for a Clean Bay: Best Management Practices to Prevent Stormwater Pollution from Construction Related Activities; Santa Clara Valley Nonpoint Source Pollution Control Program, 1995.

Coastal Nonpoint Pollution Control Program: Program Development and Approval Guidance, Working Group Working Paper; USEPA, April 1992.

Stormwater Quality Handbooks - Construction Site Best Management Practices (BMPs) Manual, State of California Department of Transportation (Caltrans), November 2000.

Stormwater Management for Construction Activities, Developing Pollution Prevention Plans and Best Management Practices, EPA 832-R-92005; USEPA, April 1992.

Vehicle & Equipment Maintenance NS-10

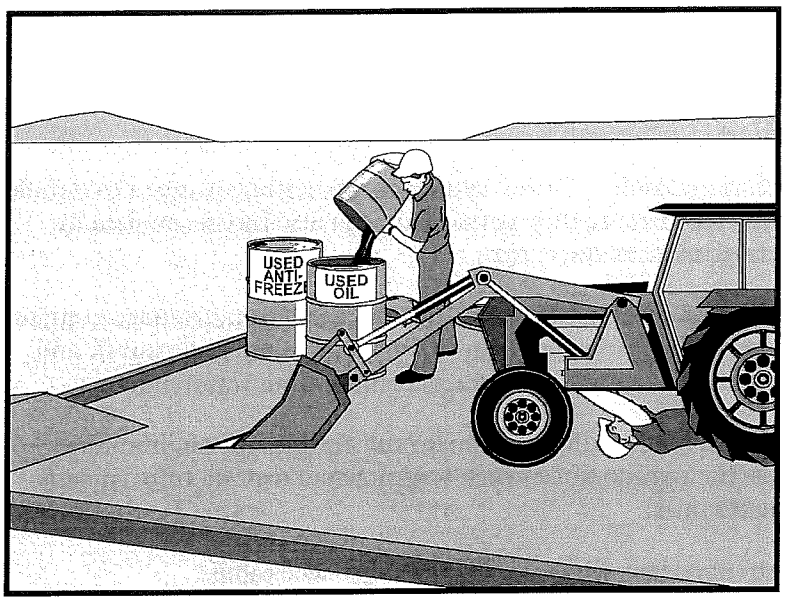

Categories

EC	Erosion Control	
SE	Sediment Control	
TC	Tracking Control	
WE	Wind Erosion Control	
NS	Non-Stormwater Management Control	☑
WM	Waste Management and Materials Pollution Control	

Legend:

☑ **Primary Objective**

☒ **Secondary Objective**

Targeted Constituents

Sediment	
Nutrients	☑
Trash	☑
Metals	
Bacteria	
Oil and Grease	☑
Organics	☑

Potential Alternatives

None

If User/Subscriber modifies this fact sheet in any way, the CASQA name/logo and footer below must be removed from each page and not appear on the modified version.

Description and Purpose

Prevent or reduce the contamination of stormwater resulting from vehicle and equipment maintenance by running a "dry and clean site". The best option would be to perform maintenance activities at an offsite facility. If this option is not available then work should be performed in designated areas only, while providing cover for materials stored outside, checking for leaks and spills, and containing and cleaning up spills immediately. Employees and subcontractors must be trained in proper procedures.

Suitable Applications

These procedures are suitable on all construction projects where an onsite yard area is necessary for storage and maintenance of heavy equipment and vehicles.

Limitations

Onsite vehicle and equipment maintenance should only be used where it is impractical to send vehicles and equipment offsite for maintenance and repair. Sending vehicles/equipment offsite should be done in conjunction with TC-1, Stabilized Construction Entrance/Exit.

Outdoor vehicle or equipment maintenance is a potentially significant source of stormwater pollution. Activities that can contaminate stormwater include engine repair and service, changing or replacement of fluids, and outdoor equipment storage and parking (engine fluid leaks). For further information on vehicle or equipment servicing, see NS-8,

CASQA
CALIFORNIA STORMWATER QUALITY ASSOCIATION

Vehicle and Equipment Cleaning, and NS-9, Vehicle and Equipment Fueling.

Implementation

- Use offsite repair shops as much as possible. These businesses are better equipped to handle vehicle fluids and spills properly. Performing this work offsite can also be economical by eliminating the need for a separate maintenance area.
- If maintenance must occur onsite, use designated areas, located away from drainage courses. Dedicated maintenance areas should be protected from stormwater runon and runoff, and should be located at least 50 ft from downstream drainage facilities and watercourses.
- Drip pans or absorbent pads should be used during vehicle and equipment maintenance work that involves fluids, unless the maintenance work is performed over an impermeable surface in a dedicated maintenance area.
- Place a stockpile of spill cleanup materials where it will be readily accessible.
- All fueling trucks and fueling areas are required to have spill kits and/or use other spill protection devices.
- Use adsorbent materials on small spills. Remove the absorbent materials promptly and dispose of properly.
- Inspect onsite vehicles and equipment daily at startup for leaks, and repair immediately.
- Keep vehicles and equipment clean; do not allow excessive build-up of oil and grease.
- Segregate and recycle wastes, such as greases, used oil or oil filters, antifreeze, cleaning solutions, automotive batteries, hydraulic and transmission fluids. Provide secondary containment and covers for these materials if stored onsite.
- Train employees and subcontractors in proper maintenance and spill cleanup procedures.
- Drip pans or plastic sheeting should be placed under all vehicles and equipment placed on docks, barges, or other structures over water bodies when the vehicle or equipment is planned to be idle for more than 1 hour.
- For long-term projects, consider using portable tents or covers over maintenance areas if maintenance cannot be performed offsite.
- Consider use of new, alternative greases and lubricants, such as adhesive greases, for chassis lubrication and fifth-wheel lubrication.
- Properly dispose of used oils, fluids, lubricants, and spill cleanup materials.
- Do not place used oil in a dumpster or pour into a storm drain or watercourse.
- Properly dispose of or recycle used batteries.
- Do not bury used tires.

- Repair leaks of fluids and oil immediately.

Listed below is further information if you must perform vehicle or equipment maintenance onsite.

Safer Alternative Products

- Consider products that are less toxic or hazardous than regular products. These products are often sold under an "environmentally friendly" label.
- Consider use of grease substitutes for lubrication of truck fifth-wheels. Follow manufacturers label for details on specific uses.
- Consider use of plastic friction plates on truck fifth-wheels in lieu of grease. Follow manufacturers label for details on specific uses.

Waste Reduction

Parts are often cleaned using solvents such as trichloroethylene, trichloroethane, or methylene chloride. Many of these cleaners are listed in California Toxic Rule as priority pollutants. These materials are harmful and must not contaminate stormwater. They must be disposed of as a hazardous waste. Reducing the number of solvents makes recycling easier and reduces hazardous waste management costs. Often, one solvent can perform a job as well as two different solvents. Also, if possible, eliminate or reduce the amount of hazardous materials and waste by substituting non-hazardous or less hazardous materials. For example, replace chlorinated organic solvents with non-chlorinated solvents. Non-chlorinated solvents like kerosene or mineral spirits are less toxic and less expensive to dispose of properly. Check the list of active ingredients to see whether it contains chlorinated solvents. The "chlor" term indicates that the solvent is chlorinated. Also, try substituting a wire brush for solvents to clean parts.

Recycling and Disposal

Separating wastes allows for easier recycling and may reduce disposal costs. Keep hazardous wastes separate, do not mix used oil solvents, and keep chlorinated solvents (like,-trichloroethane) separate from non-chlorinated solvents (like kerosene and mineral spirits). Promptly transfer used fluids to the proper waste or recycling drums. Don't leave full drip pans or other open containers lying around. Provide cover and secondary containment until these materials can be removed from the site.

Oil filters can be recycled. Ask your oil supplier or recycler about recycling oil filters.

Do not dispose of extra paints and coatings by dumping liquid onto the ground or throwing it into dumpsters. Allow coatings to dry or harden before disposal into covered dumpsters.

Store cracked batteries in a non-leaking secondary container. Do this with all cracked batteries, even if you think all the acid has drained out. If you drop a battery, treat it as if it is cracked. Put it into the containment area until you are sure it is not leaking.

Costs

All of the above are low cost measures. Higher costs are incurred to setup and maintain onsite maintenance areas.

Inspection and Maintenance

- Inspect and verify that activity-based BMPs are in place prior to the commencement of associated activities. While activities associated with the BMP are under way, inspect BMPs in accordance with General Permit requirements for the associated project type and risk level. It is recommended that at a minimum, BMPs be inspected weekly, prior to forecasted rain events, daily during extended rain events, and after the conclusion of rain events.
- Inspect BMPs subject to non-stormwater discharges daily while non-stormwater discharges occur.
- Keep ample supplies of spill cleanup materials onsite.
- Maintain waste fluid containers in leak proof condition.
- Vehicles and equipment should be inspected on each day of use. Leaks should be repaired immediately or the problem vehicle(s) or equipment should be removed from the project site.
- Inspect equipment for damaged hoses and leaky gaskets routinely. Repair or replace as needed.

References

Blueprint for a Clean Bay: Best Management Practices to Prevent Stormwater Pollution from Construction Related Activities; Santa Clara Valley Nonpoint Source Pollution Control Program, 1995.

Coastal Nonpoint Pollution Control Program; Program Development and Approval Guidance, Working Group, Working Paper; USEPA, April 1992.

Stormwater Quality Handbooks - Construction Site Best Management Practices (BMPs) Manual, State of California Department of Transportation (Caltrans), November 2000.

Concrete Curing NS-12

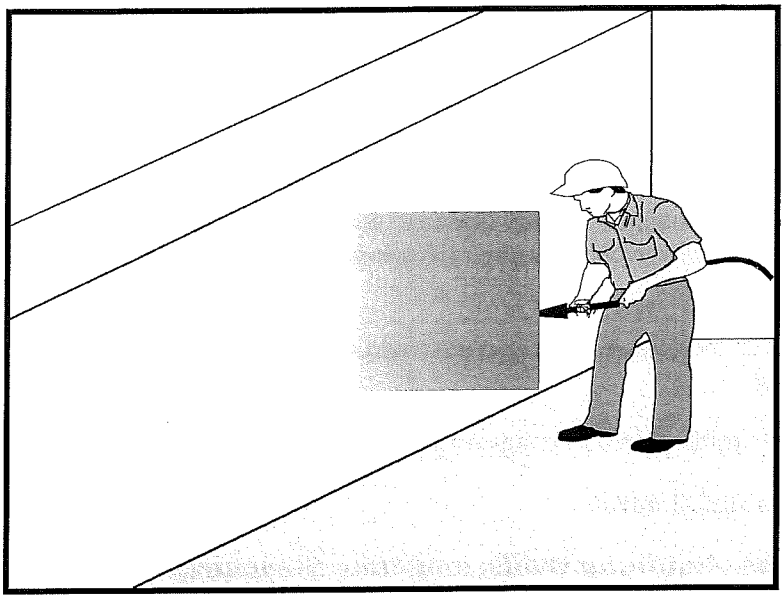

Categories		
EC	Erosion Control	
SE	Sediment Control	
TC	Tracking Control	
WE	Wind Erosion Control	
NS	Non-Stormwater Management Control	☑
WM	Waste Management and Materials Pollution Control	☑

Legend:
☑ **Primary Category**
☒ **Secondary Category**

Targeted Constituents	
Sediment	☑
Nutrients	
Trash	
Metals	☑
Bacteria	
Oil and Grease	☑
Organics	

Potential Alternatives

None

If User/Subscriber modifies this fact sheet in any way, the CASQA name/logo and footer below must be removed from each page and not appear on the modified version.

Description and Purpose

Concrete curing is used in the construction of structures such as bridges, retaining walls, pump houses, large slabs, and structured foundations. Concrete curing includes the use of both chemical and water methods.

Concrete and its associated curing materials have basic chemical properties that can raise the pH of water to levels outside of the permitted range. Discharges of stormwater and non-stormwater exposed to concrete during curing may have a high pH and may contain chemicals, metals, and fines. The General Permit incorporates Numeric Action Levels (NAL) for pH (see Section 2 of this handbook to determine your project's risk level and if you are subject to these requirements).

Proper procedures and care should be taken when managing concrete curing materials to prevent them from coming into contact with stormwater flows, which could result in a high pH discharge.

Suitable Applications

Suitable applications include all projects where Portland Cement Concrete (PCC) and concrete curing chemicals are placed where they can be exposed to rainfall, runoff from other areas, or where runoff from the PCC will leave the site.

Limitations

- Runoff contact with concrete waste can raise pH levels in the water to environmentally harmful levels and trigger permit violations.

CASQA
CALIFORNIA STORMWATER QUALITY ASSOCIATION

Implementation

Chemical Curing

- Avoid over spray of curing compounds.
- Minimize the drift by applying the curing compound close to the concrete surface. Apply an amount of compound that covers the surface, but does not allow any runoff of the compound.
- Use proper storage and handling techniques for concrete curing compounds. Refer to WM-1, Material Delivery and Storage.
- Protect drain inlets prior to the application of curing compounds.
- Refer to WM-4, Spill Prevention and Control.

Water Curing for Bridge Decks, Retaining Walls, and other Structures

- Direct cure water away from inlets and watercourses to collection areas for evaporation or other means of removal in accordance with all applicable permits. See WM-8 Concrete Waste Management.
- Collect cure water at the top of slopes and transport to a concrete waste management area in a non-erosive manner. See EC-9 Earth Dikes and Drainage Swales, EC-10, Velocity Dissipation Devices, and EC-11, Slope Drains.
- Utilize wet blankets or a similar method that maintains moisture while minimizing the use and possible discharge of water.

Education

- Educate employees, subcontractors, and suppliers on proper concrete curing techniques to prevent contact with discharge as described herein.
- Arrange for the QSP or the appropriately trained contractor's superintendent or representative to oversee and enforce concrete curing procedures.

Costs

All of the above measures are generally low cost.

Inspection and Maintenance

- Inspect and verify that activity-based BMPs are in place prior to the commencement of associated activities.
- BMPs must be inspected in accordance with General Permit requirements for the associated project type and risk level. It is recommended that at a minimum, BMPs be inspected weekly, prior to forecasted rain events, daily during extended rain events, and after the conclusion of rain events.
- Inspect BMPs subject to non-stormwater discharges daily while non-stormwater discharges occur.

- Sample non-stormwater discharges and stormwater runoff that contacts uncured and partially cured concrete as required by the General Permit.
- Ensure that employees and subcontractors implement appropriate measures for storage, handling, and use of curing compounds.
- Inspect cure containers and spraying equipment for leaks.

References

Blue Print for a Clean Bay-Construction-Related Industries: Best Management Practices for Stormwater Pollution Prevention; Santa Clara Valley Non Point Source Pollution Control Program, 1992.

Stormwater Quality Handbooks - Construction Site Best Management Practices (BMPs) Manual, State of California Department of Transportation (Caltrans), March 2003.

Stormwater Management for Construction Activities, Developing Pollution Prevention Plans and Best Management Practices, EPA 832-R-92005; USEPA, April 1992.

Erosion and Sediment Control Manual, Oregon Department of Environmental Quality, February 2005.

Material Delivery and Storage WM-1

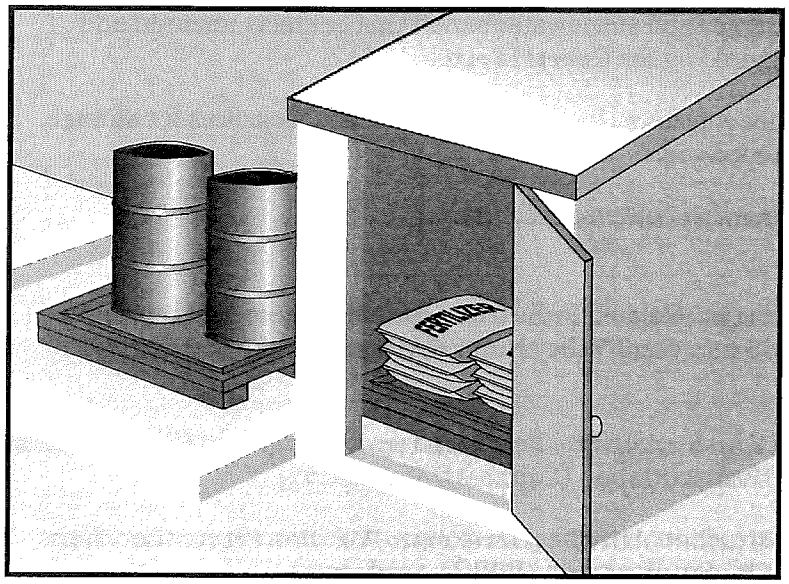

Categories		
EC	Erosion Control	
SE	Sediment Control	
TC	Tracking Control	
WE	Wind Erosion Control	
NS	Non-Stormwater Management Control	
WM	Waste Management and Materials Pollution Control	☑

Legend:

☑ **Primary Category**

☒ **Secondary Category**

Targeted Constituents	
Sediment	☑
Nutrients	☑
Trash	☑
Metals	☑
Bacteria	
Oil and Grease	☑
Organics	☑

Potential Alternatives

None

If User/Subscriber modifies this fact sheet in any way, the CASQA name/logo and footer below must be removed from each page and not appear on the modified version.

Description and Purpose

Prevent, reduce, or eliminate the discharge of pollutants from material delivery and storage to the stormwater system or watercourses by minimizing the storage of hazardous materials onsite, storing materials in watertight containers and/or a completely enclosed designated area, installing secondary containment, conducting regular inspections, and training employees and subcontractors.

This best management practice covers only material delivery and storage. For other information on materials, see WM-2, Material Use, or WM-4, Spill Prevention and Control. For information on wastes, see the waste management BMPs in this section.

Suitable Applications

These procedures are suitable for use at all construction sites with delivery and storage of the following materials:

- Soil stabilizers and binders
- Pesticides and herbicides
- Fertilizers
- Detergents
- Plaster
- Petroleum products such as fuel, oil, and grease

CASQA
CALIFORNIA STORMWATER QUALITY ASSOCIATION

- Asphalt and concrete components
- Hazardous chemicals such as acids, lime, glues, adhesives, paints, solvents, and curing compounds
- Concrete compounds
- Other materials that may be detrimental if released to the environment

Limitations

- Space limitation may preclude indoor storage.
- Storage sheds often must meet building and fire code requirements.

Implementation

The following steps should be taken to minimize risk:

- Chemicals must be stored in water tight containers with appropriate secondary containment or in a storage shed.
- When a material storage area is located on bare soil, the area should be lined and bermed.
- Use containment pallets or other practical and available solutions, such as storing materials within newly constructed buildings or garages, to meet material storage requirements.
- Stack erodible landscape material on pallets and cover when not in use.
- Contain all fertilizers and other landscape materials when not in use.
- Temporary storage areas should be located away from vehicular traffic.
- Material Safety Data Sheets (MSDS) should be available on-site for all materials stored that have the potential to effect water quality.
- Construction site areas should be designated for material delivery and storage.
- Material delivery and storage areas should be located away from waterways, if possible.
  - Avoid transport near drainage paths or waterways.
  - Surround with earth berms or other appropriate containment BMP. See EC-9, Earth Dikes and Drainage Swales.
  - Place in an area that will be paved.
- Storage of reactive, ignitable, or flammable liquids must comply with the fire codes of your area. Contact the local Fire Marshal to review site materials, quantities, and proposed storage area to determine specific requirements. See the Flammable and Combustible Liquid Code, NFPA30.
- An up to date inventory of materials delivered and stored onsite should be kept.

- Hazardous materials storage onsite should be minimized.
- Hazardous materials should be handled as infrequently as possible.
- Keep ample spill cleanup supplies appropriate for the materials being stored. Ensure that cleanup supplies are in a conspicuous, labeled area.
- Employees and subcontractors should be trained on the proper material delivery and storage practices.
- Employees trained in emergency spill cleanup procedures must be present when dangerous materials or liquid chemicals are unloaded.
- If significant residual materials remain on the ground after construction is complete, properly remove and dispose of materials and any contaminated soil. See WM-7, Contaminated Soil Management. If the area is to be paved, pave as soon as materials are removed to stabilize the soil.

Material Storage Areas and Practices

- Liquids, petroleum products, and substances listed in 40 CFR Parts 110, 117, or 302 should be stored in approved containers and drums and should not be overfilled. Containers and drums should be placed in temporary containment facilities for storage.
- A temporary containment facility should provide for a spill containment volume able to contain precipitation from a 25 year storm event, plus the greater of 10% of the aggregate volume of all containers or 100% of the capacity of the largest container within its boundary, whichever is greater.
- A temporary containment facility should be impervious to the materials stored therein for a minimum contact time of 72 hours.
- A temporary containment facility should be maintained free of accumulated rainwater and spills. In the event of spills or leaks, accumulated rainwater and spills should be collected and placed into drums. These liquids should be handled as a hazardous waste unless testing determines them to be non-hazardous. All collected liquids or non-hazardous liquids should be sent to an approved disposal site.
- Sufficient separation should be provided between stored containers to allow for spill cleanup and emergency response access.
- Incompatible materials, such as chlorine and ammonia, should not be stored in the same temporary containment facility.
- Materials should be covered prior to, and during rain events.
- Materials should be stored in their original containers and the original product labels should be maintained in place in a legible condition. Damaged or otherwise illegible labels should be replaced immediately.

- Bagged and boxed materials should be stored on pallets and should not be allowed to accumulate on the ground. To provide protection from wind and rain throughout the rainy season, bagged and boxed materials should be covered during non-working days and prior to and during rain events.
- Stockpiles should be protected in accordance with WM-3, Stockpile Management.
- Materials should be stored indoors within existing structures or completely enclosed storage sheds when available.
- Proper storage instructions should be posted at all times in an open and conspicuous location.
- An ample supply of appropriate spill clean up material should be kept near storage areas.
- Also see WM-6, Hazardous Waste Management, for storing of hazardous wastes.

Material Delivery Practices

- Keep an accurate, up-to-date inventory of material delivered and stored onsite.
- Arrange for employees trained in emergency spill cleanup procedures to be present when dangerous materials or liquid chemicals are unloaded.

Spill Cleanup

- Contain and clean up any spill immediately.
- Properly remove and dispose of any hazardous materials or contaminated soil if significant residual materials remain on the ground after construction is complete. See WM-7, Contaminated Soil Management.
- See WM-4, Spill Prevention and Control, for spills of chemicals and/or hazardous materials.
- If spills or leaks of materials occur that are not contained and could discharge to surface waters, non-visible sampling of site discharge may be required. Refer to the General Permit or to your project specific Construction Site Monitoring Plan to determine if and where sampling is required.

Cost

- The largest cost of implementation may be in the construction of a materials storage area that is covered and provides secondary containment.

Inspection and Maintenance

- BMPs must be inspected in accordance with General Permit requirements for the associated project type and risk level. It is recommended that at a minimum, BMPs be inspected weekly, prior to forecasted rain events, daily during extended rain events, and after the conclusion of rain events.
- Keep storage areas clean and well organized, including a current list of all materials onsite.
- Inspect labels on containers for legibility and accuracy.

- Repair or replace perimeter controls, containment structures, covers, and liners as needed to maintain proper function.

References

Blueprint for a Clean Bay: Best Management Practices to Prevent Stormwater Pollution from Construction Related Activities; Santa Clara Valley Nonpoint Source Pollution Control Program, 1995.

Coastal Nonpoint Pollution Control Program: Program Development and Approval Guidance, Working Group Working Paper; USEPA, April 1992.

Stormwater Quality Handbooks - Construction Site Best Management Practices (BMPs) Manual, State of California Department of Transportation (Caltrans), March 2003.

Stormwater Management for Construction Activities; Developing Pollution Prevention Plans and Best Management Practice, EPA 832-R-92005; USEPA, April 1992.

Material Use

WM-2

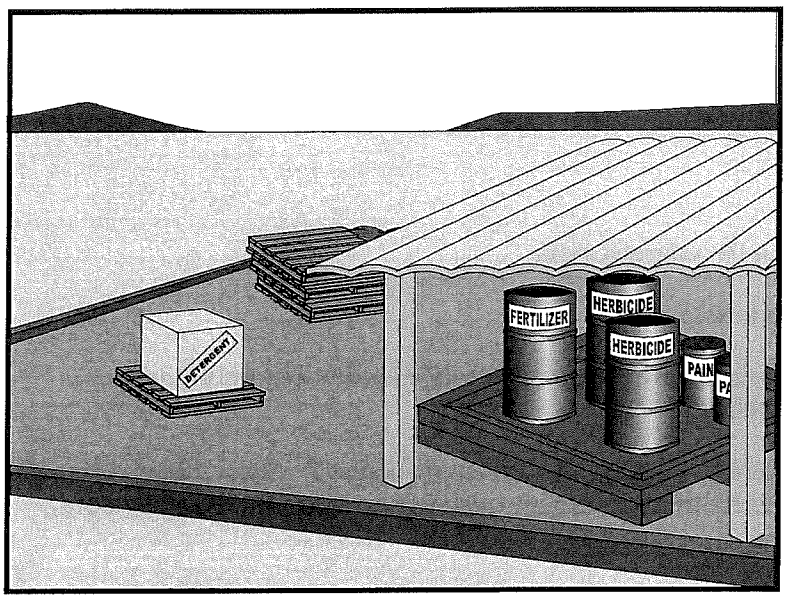

Categories

EC	Erosion Control	
SE	Sediment Control	
TC	Tracking Control	
WE	Wind Erosion Control	
NS	Non-Stormwater Management Control	
WM	Waste Management and Materials Pollution Control	☑

Legend:

☑ **Primary Category**

☒ **Secondary Category**

Targeted Constituents

Sediment	☑
Nutrients	☑
Trash	☑
Metals	☑
Bacteria	
Oil and Grease	☑
Organics	☑

Potential Alternatives

None

If User/Subscriber modifies this fact sheet in any way, the CASQA name/logo and footer below must be removed from each page and not appear on the modified version.

Description and Purpose

Prevent or reduce the discharge of pollutants to the storm drain system or watercourses from material use by using alternative products, minimizing hazardous material use onsite, and training employees and subcontractors.

Suitable Applications

This BMP is suitable for use at all construction projects. These procedures apply when the following materials are used or prepared onsite:

- Pesticides and herbicides
- Fertilizers
- Detergents
- Petroleum products such as fuel, oil, and grease
- Asphalt and other concrete components
- Other hazardous chemicals such as acids, lime, glues, adhesives, paints, solvents, and curing compounds
- Other materials that may be detrimental if released to the environment

CASQA
CALIFORNIA STORMWATER QUALITY ASSOCIATION

Limitations

Safer alternative building and construction products may not be available or suitable in every instance.

Implementation

The following steps should be taken to minimize risk:

- Minimize use of hazardous materials onsite.
- Follow manufacturer instructions regarding uses, protective equipment, ventilation, flammability, and mixing of chemicals.
- Train personnel who use pesticides. The California Department of Pesticide Regulation and county agricultural commissioners license pesticide dealers, certify pesticide applicators, and conduct onsite inspections.
- The preferred method of termiticide application is soil injection near the existing or proposed structure foundation/slab; however, if not feasible, soil drench application of termiticides should follow EPA label guidelines and the following recommendations (most of which are applicable to most pesticide applications):
  - Do not treat soil that is water-saturated or frozen.
  - Application shall not commence within 24-hours of a predicted precipitation event with a 40% or greater probability. Weather tracking must be performed on a daily basis prior to termiticide application and during the period of termiticide application.
  - Do not allow treatment chemicals to runoff from the target area. Apply proper quantity to prevent excess runoff. Provide containment for and divert stormwater from application areas using berms or diversion ditches during application.
  - Dry season: Do not apply within 10 feet of storm drains. Do not apply within 25 feet of aquatic habitats (such as, but not limited to, lakes; reservoirs; rivers; permanent streams; marshes or ponds; estuaries; and commercial fish farm ponds).
  - Wet season: Do not apply within 50 feet of storm drains or aquatic habitats (such as, but not limited to, lakes; reservoirs; rivers; permanent streams; marshes or ponds; estuaries; and commercial fish farm ponds) unless a vegetative buffer is present (if so, refer to dry season requirements).
  - Do not make on-grade applications when sustained wind speeds are above 10 mph (at application site) at nozzle end height.
  - Cover treatment site prior to a rain event in order to prevent run-off of the pesticide into non-target areas. The treated area should be limited to a size that can be backfilled and/or covered by the end of the work shift. Backfilling or covering of the treated area shall be done by the end of the same work shift in which the application is made.
  - The applicator must either cover the soil him/herself or provide written notification of the above requirement to the contractor on site and to the person commissioning the

application (if different than the contractor). If notice is provided to the contractor or the person commissioning the application, then they are responsible under the Federal Insecticide Fungicide, and Rodenticide Act (FIFRA) to ensure that: 1) if the concrete slab cannot be poured over the treated soil within 24 hours of application, the treated soil is covered with a waterproof covering (such as polyethylene sheeting), and 2) the treated soil is covered if precipitation is predicted to occur before the concrete slab is scheduled to be poured.

- Do not over-apply fertilizers, herbicides, and pesticides. Prepare only the amount needed. Follow the recommended usage instructions. Over-application is expensive and environmentally harmful. Unless on steep slopes, till fertilizers into the soil rather than hydraulic application. Apply surface dressings in several smaller applications, as opposed to one large application, to allow time for infiltration and to avoid excess material being carried offsite by runoff. Do not apply these chemicals before predicted rainfall.
- Train employees and subcontractors in proper material use.
- Supply Material Safety Data Sheets (MSDS) for all materials.
- Dispose of latex paint and paint cans, used brushes, rags, absorbent materials, and drop cloths, when thoroughly dry and are no longer hazardous, with other construction debris.
- Do not remove the original product label; it contains important safety and disposal information. Use the entire product before disposing of the container.
- Mix paint indoors or in a containment area. Never clean paintbrushes or rinse paint containers into a street, gutter, storm drain, or watercourse. Dispose of any paint thinners, residue, and sludge(s) that cannot be recycled, as hazardous waste.
- For water-based paint, clean brushes to the extent practicable, and rinse to a drain leading to a sanitary sewer where permitted, or contain for proper disposal off site. For oil-based paints, clean brushes to the extent practicable, and filter and reuse thinners and solvents.
- Use recycled and less hazardous products when practical. Recycle residual paints, solvents, non-treated lumber, and other materials.
- Use materials only where and when needed to complete the construction activity. Use safer alternative materials as much as possible. Reduce or eliminate use of hazardous materials onsite when practical.
- Document the location, time, chemicals applied, and applicator's name and qualifications.
- Keep an ample supply of spill clean up material near use areas. Train employees in spill clean up procedures.
- Avoid exposing applied materials to rainfall and runoff unless sufficient time has been allowed for them to dry.
- Discontinue use of erodible landscape material within 2 days prior to a forecasted rain event and materials should be covered and/or bermed.

- Provide containment for material use areas such as masons' areas or paint mixing/preparation areas to prevent materials/pollutants from entering stormwater.

Costs

All of the above are low cost measures.

Inspection and Maintenance

- Inspect and verify that activity-based BMPs are in place prior to the commencement of associated activities.
- BMPs must be inspected in accordance with General Permit requirements for the associated project type and risk level. It is recommended that at a minimum, BMPs be inspected weekly, prior to forecasted rain events, daily during extended rain events, and after the conclusion of rain events.
- Ensure employees and subcontractors throughout the job are using appropriate practices.

References

Blueprint for a Clean Bay: Best Management Practices to Prevent Stormwater Pollution from Construction Related Activities; Santa Clara Valley Nonpoint Source Pollution Control Program, 1995.

Coastal Nonpoint Pollution Control Program: Program Development and Approval Guidance, Working Group Working Paper; USEPA, April 1992.

Comments on Risk Assessments Risk Reduction Options for Cypermethrin: Docket No. OPP–2005–0293; California Stormwater Quality Association (CASQA) letter to USEPA, 2006.Environmental Hazard and General Labeling for Pyrethroid Non-Agricultural Outdoor Products, EPA-HQ-OPP-2008-0331-0021; USEPA, 2008.

Stormwater Quality Handbooks - Construction Site Best Management Practices (BMPs) Manual, State of California Department of Transportation (Caltrans), March 2003.

Stormwater Management for Construction Activities; Developing Pollution Prevention Plans and Best Management Practice, EPA 832-R-92005; USEPA, April 1992.

Stockpile Management WM-3

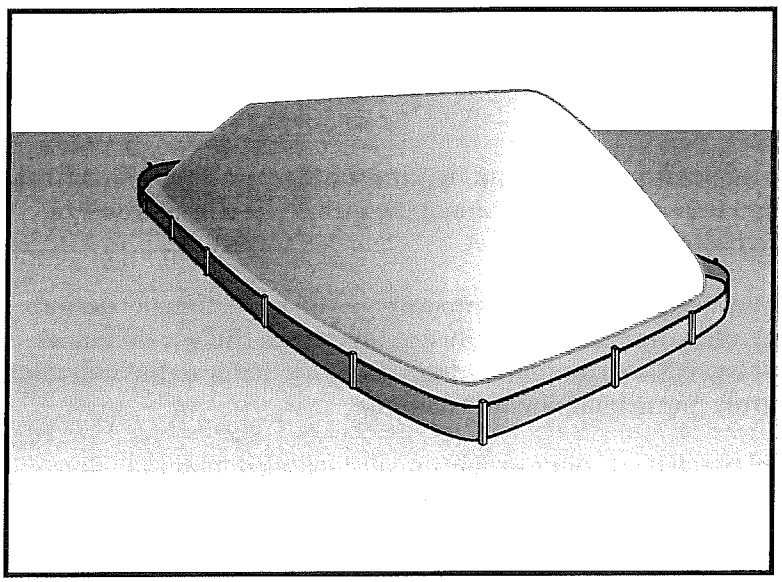

Categories		
EC	Erosion Control	
SE	Sediment Control	☒
TC	Tracking Control	
WE	Wind Erosion Control	
NS	Non-Stormwater Management Control	☒
WM	Waste Management and Materials Pollution Control	☑

Legend:

☑ **Primary Category**

☒ **Secondary Category**

Targeted Constituents	
Sediment	☑
Nutrients	☑
Trash	☑
Metals	☑
Bacteria	
Oil and Grease	☑
Organics	☑

Potential Alternatives

None

Description and Purpose

Stockpile management procedures and practices are designed to reduce or eliminate air and stormwater pollution from stockpiles of soil, soil amendments, sand, paving materials such as portland cement concrete (PCC) rubble, asphalt concrete (AC), asphalt concrete rubble, aggregate base, aggregate sub base or pre-mixed aggregate, asphalt minder (so called "cold mix" asphalt), and pressure treated wood.

Suitable Applications

Implement in all projects that stockpile soil and other loose materials.

Limitations

- Plastic sheeting as a stockpile protection is temporary and hard to manage in windy conditions. Where plastic is used, consider use of plastic tarps with nylon reinforcement which may be more durable than standard sheeting.
- Plastic sheeting can increase runoff volume due to lack of infiltration and potentially cause perimeter control failure.
- Plastic sheeting breaks down faster in sunlight.
- The use of Plastic materials and photodegradable plastics should be avoided.

Implementation

Protection of stockpiles is a year-round requirement. To properly manage stockpiles:

If User/Subscriber modifies this fact sheet in any way, the CASQA name/logo and footer below must be removed from each page and not appear on the modified version.

- On larger sites, a minimum of 50 ft separation from concentrated flows of stormwater, drainage courses, and inlets is recommended.
- After 14 days of inactivity, a stockpile is non-active and requires further protection described below. All stockpiles are required to be protected as non-active stockpiles immediately if they are not scheduled to be used within 14 days.
- Protect all stockpiles from stormwater runon using temporary perimeter sediment barriers such as compost berms (SE-13), temporary silt dikes (SE-12), fiber rolls (SE-5), silt fences (SE-1), sandbags (SE-8), gravel bags (SE-6), or biofilter bags (SE-14). Refer to the individual fact sheet for each of these controls for installation information.
- Implement wind erosion control practices as appropriate on all stockpiled material. For specific information, see WE-1, Wind Erosion Control.
- Manage stockpiles of contaminated soil in accordance with WM-7, Contaminated Soil Management.
- Place bagged materials on pallets and under cover.
- Ensure that stockpile coverings are installed securely to protect from wind and rain.
- Some plastic covers withstand weather and sunlight better than others. Select cover materials or methods based on anticipated duration of use.

Protection of Non-Active Stockpiles

A stockpile is considered non-active if it either is not used for 14 days or if it is scheduled not to be used for 14 days or more. Stockpiles need to be protected immediately if they are not scheduled to be used within 14 days. Non-active stockpiles of the identified materials should be protected as follows:

Soil stockpiles

- Soil stockpiles should be covered or protected with soil stabilization measures and a temporary perimeter sediment barrier at all times.
- Temporary vegetation should be considered for topsoil piles that will be stockpiled for extended periods.

Stockpiles of Portland cement concrete rubble, asphalt concrete, asphalt concrete rubble, aggregate base, or aggregate sub base

- Stockpiles should be covered and protected with a temporary perimeter sediment barrier at all times.

Stockpiles of "cold mix"

- Cold mix stockpiles should be placed on and covered with plastic sheeting or comparable material at all times and surrounded by a berm.

Stockpiles of fly ash, stucco, hydrated lime

- Stockpiles of materials that may raise the pH of runoff (i.e., basic materials) should be covered with plastic and surrounded by a berm.

Stockpiles/Storage of wood (Pressure treated with chromated copper arsenate or ammoniacal copper zinc arsenate

- Treated wood should be covered with plastic sheeting or comparable material at all times and surrounded by a berm.

Protection of Active Stockpiles

A stockpile is active when it is being used or is scheduled to be used within 14 days of the previous use. Active stockpiles of the identified materials should be protected as follows:

- All stockpiles should be covered and protected with a temporary linear sediment barrier prior to the onset of precipitation.
- Stockpiles of "cold mix" and treated wood, and basic materials should be placed on and covered with plastic sheeting or comparable material and surrounded by a berm prior to the onset of precipitation.
- The downstream perimeter of an active stockpile should be protected with a linear sediment barrier or berm and runoff should be diverted around or away from the stockpile on the upstream perimeter.

Costs

For cost information associated with stockpile protection refer to the individual erosion or sediment control BMP fact sheet considered for implementation (For example, refer to SE-1 Silt Fence for installation of silt fence around the perimeter of a stockpile.)

Inspection and Maintenance

- Stockpiles must be inspected in accordance with General Permit requirements for the associated project type and risk level. It is recommended that at a minimum, BMPs be inspected weekly, prior to forecasted rain events, daily during extended rain events, and after the conclusion of rain events.
- It may be necessary to inspect stockpiles covered with plastic sheeting more frequently during certain conditions (for example, high winds or extreme heat).
- Repair and/or replace perimeter controls and covers as needed to keep them functioning properly.
- Sediment shall be removed when it reaches one-third of the barrier height.

References

Stormwater Quality Handbooks - Construction Site Best Management Practices (BMPs) Manual, State of California Department of Transportation (Caltrans), March 2003.

Spill Prevention and Control WM-4

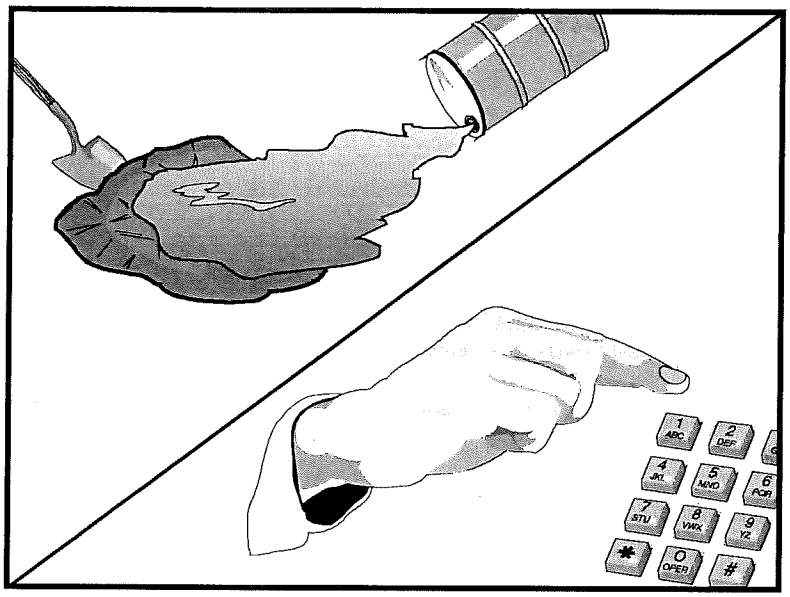

Categories

EC	Erosion Control	
SE	Sediment Control	
TC	Tracking Control	
WE	Wind Erosion Control	
NS	Non-Stormwater Management Control	
WM	Waste Management and Materials Pollution Control	☑

Legend:

☑ **Primary Objective**

☒ **Secondary Objective**

Targeted Constituents

Sediment	☑
Nutrients	☑
Trash	☑
Metals	☑
Bacteria	
Oil and Grease	☑
Organics	☑

Potential Alternatives

None

If User/Subscriber modifies this fact sheet in any way, the CASQA name/logo and footer below must be removed from each page and not appear on the modified version.

Description and Purpose

Prevent or reduce the discharge of pollutants to drainage systems or watercourses from leaks and spills by reducing the chance for spills, stopping the source of spills, containing and cleaning up spills, properly disposing of spill materials, and training employees.

This best management practice covers only spill prevention and control. However, WM-1, Materials Delivery and Storage, and WM-2, Material Use, also contain useful information, particularly on spill prevention. For information on wastes, see the waste management BMPs in this section.

Suitable Applications

This BMP is suitable for all construction projects. Spill control procedures are implemented anytime chemicals or hazardous substances are stored on the construction site, including the following materials:

- Soil stabilizers/binders
- Dust palliatives
- Herbicides
- Growth inhibitors
- Fertilizers
- Deicing/anti-icing chemicals

CASQA
CALIFORNIA STORMWATER QUALITY ASSOCIATION

- Hold regular meetings to discuss and reinforce disposal procedures (incorporate into regular safety meetings).
- Require that employees and subcontractors follow solid waste handling and storage procedures.
- Prohibit littering by employees, subcontractors, and visitors.
- Minimize production of solid waste materials wherever possible.

Collection, Storage, and Disposal

- Littering on the project site should be prohibited.
- To prevent clogging of the storm drainage system, litter and debris removal from drainage grates, trash racks, and ditch lines should be a priority.
- Trash receptacles should be provided in the contractor's yard, field trailer areas, and at locations where workers congregate for lunch and break periods.
- Litter from work areas within the construction limits of the project site should be collected and placed in watertight dumpsters at least weekly, regardless of whether the litter was generated by the contractor, the public, or others. Collected litter and debris should not be placed in or next to drain inlets, stormwater drainage systems, or watercourses.
- Dumpsters of sufficient size and number should be provided to contain the solid waste generated by the project.
- Full dumpsters should be removed from the project site and the contents should be disposed of by the trash hauling contractor.
- Construction debris and waste should be removed from the site biweekly or more frequently as needed.
- Construction material visible to the public should be stored or stacked in an orderly manner.
- Stormwater runon should be prevented from contacting stored solid waste through the use of berms, dikes, or other temporary diversion structures or through the use of measures to elevate waste from site surfaces.
- Solid waste storage areas should be located at least 50 ft from drainage facilities and watercourses and should not be located in areas prone to flooding or ponding.
- Except during fair weather, construction and highway planting waste not stored in watertight dumpsters should be securely covered from wind and rain by covering the waste with tarps or plastic.
- Segregate potentially hazardous waste from non-hazardous construction site waste.
- Make sure that toxic liquid wastes (used oils, solvents, and paints) and chemicals (acids, pesticides, additives, curing compounds) are not disposed of in dumpsters designated for construction debris.

- Highway planting wastes, including vegetative material, plant containers, and packaging materials

Limitations

Temporary stockpiling of certain construction wastes may not necessitate stringent drainage related controls during the non-rainy season or in desert areas with low rainfall.

Implementation

The following steps will help keep a clean site and reduce stormwater pollution:

- Select designated waste collection areas onsite.
- Inform trash-hauling contractors that you will accept only watertight dumpsters for onsite use. Inspect dumpsters for leaks and repair any dumpster that is not watertight.
- Locate containers in a covered area or in a secondary containment.
- Provide an adequate number of containers with lids or covers that can be placed over the container to keep rain out or to prevent loss of wastes when it is windy.
- Cover waste containers at the end of each work day and when it is raining.
- Plan for additional containers and more frequent pickup during the demolition phase of construction.
- Collect site trash daily, especially during rainy and windy conditions.
- Remove this solid waste promptly since erosion and sediment control devices tend to collect litter.
- Make sure that toxic liquid wastes (used oils, solvents, and paints) and chemicals (acids, pesticides, additives, curing compounds) are not disposed of in dumpsters designated for construction debris.
- Do not hose out dumpsters on the construction site. Leave dumpster cleaning to the trash hauling contractor.
- Arrange for regular waste collection before containers overflow.
- Clean up immediately if a container does spill.
- Make sure that construction waste is collected, removed, and disposed of only at authorized disposal areas.

Education

- Have the contractor's superintendent or representative oversee and enforce proper solid waste management procedures and practices.
- Instruct employees and subcontractors on identification of solid waste and hazardous waste.
- Educate employees and subcontractors on solid waste storage and disposal procedures.

Solid Waste Management WM-5

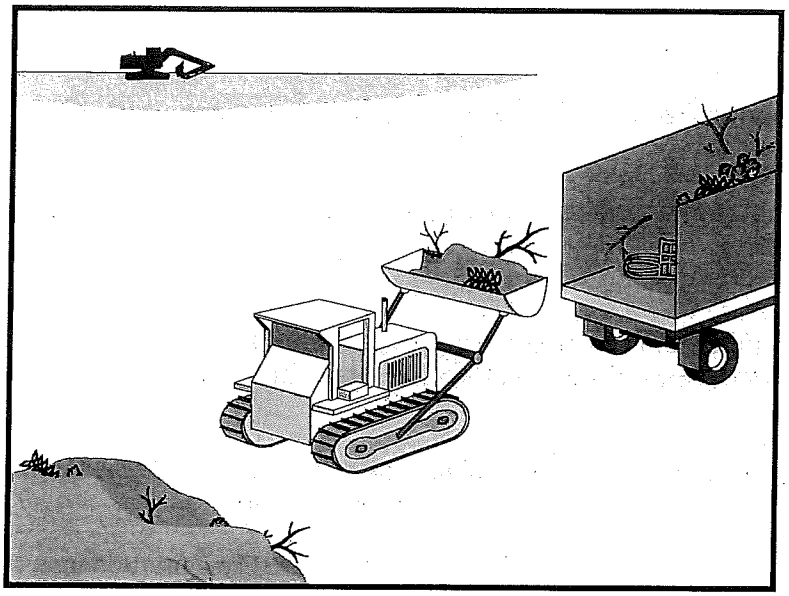

Categories		
EC	Erosion Control	
SE	Sediment Control	
TC	Tracking Control	
WE	Wind Erosion Control	
NS	Non-Stormwater Management Control	
WM	Waste Management and Materials Pollution Control	☑

Legend:

☑ **Primary Objective**

☒ **Secondary Objective**

Targeted Constituents	
Sediment	☑
Nutrients	☑
Trash	☑
Metals	☑
Bacteria	
Oil and Grease	☑
Organics	☑

Potential Alternatives

None

If User/Subscriber modifies this fact sheet in any way, the CASQA name/logo and footer below must be removed from each page and not appear on the modified version.

Description and Purpose

Solid waste management procedures and practices are designed to prevent or reduce the discharge of pollutants to stormwater from solid or construction waste by providing designated waste collection areas and containers, arranging for regular disposal, and training employees and subcontractors.

Suitable Applications

This BMP is suitable for construction sites where the following wastes are generated or stored:

- Solid waste generated from trees and shrubs removed during land clearing, demolition of existing structures (rubble), and building construction
- Packaging materials including wood, paper, and plastic
- Scrap or surplus building materials including scrap metals, rubber, plastic, glass pieces, and masonry products
- Domestic wastes including food containers such as beverage cans, coffee cups, paper bags, plastic wrappers, and cigarettes
- Construction wastes including brick, mortar, timber, steel and metal scraps, pipe and electrical cuttings, non-hazardous equipment parts, styrofoam and other materials used to transport and package construction materials

CASQA
CALIFORNIA STORMWATER QUALITY ASSOCIATION

- Inspect BMPs subject to non-stormwater discharge daily while non-stormwater discharges occur.
- Keep ample supplies of spill control and cleanup materials onsite, near storage, unloading, and maintenance areas.
- Update your spill prevention and control plan and stock cleanup materials as changes occur in the types of chemicals onsite.

References

Blueprint for a Clean Bay: Best Management Practices to Prevent Stormwater Pollution from Construction Related Activities; Santa Clara Valley Nonpoint Source Pollution Control Program, 1995.

Stormwater Quality Handbooks - Construction Site Best Management Practices (BMPs) Manual, State of California Department of Transportation (Caltrans), November 2000.

Stormwater Management for Construction Activities; Developing Pollution Prevention Plans and Best Management Practice, EPA 832-R-92005; USEPA, April 1992.

Vehicle and Equipment Maintenance

- If maintenance must occur onsite, use a designated area and a secondary containment, located away from drainage courses, to prevent the runon of stormwater and the runoff of spills.
- Regularly inspect onsite vehicles and equipment for leaks and repair immediately
- Check incoming vehicles and equipment (including delivery trucks, and employee and subcontractor vehicles) for leaking oil and fluids. Do not allow leaking vehicles or equipment onsite.
- Always use secondary containment, such as a drain pan or drop cloth, to catch spills or leaks when removing or changing fluids.
- Place drip pans or absorbent materials under paving equipment when not in use.
- Use absorbent materials on small spills rather than hosing down or burying the spill. Remove the absorbent materials promptly and dispose of properly.
- Promptly transfer used fluids to the proper waste or recycling drums. Don't leave full drip pans or other open containers lying around
- Oil filters disposed of in trashcans or dumpsters can leak oil and pollute stormwater. Place the oil filter in a funnel over a waste oil-recycling drum to drain excess oil before disposal. Oil filters can also be recycled. Ask the oil supplier or recycler about recycling oil filters.
- Store cracked batteries in a non-leaking secondary container. Do this with all cracked batteries even if you think all the acid has drained out. If you drop a battery, treat it as if it is cracked. Put it into the containment area until you are sure it is not leaking.

Vehicle and Equipment Fueling

- If fueling must occur onsite, use designate areas, located away from drainage courses, to prevent the runon of stormwater and the runoff of spills.
- Discourage "topping off" of fuel tanks.
- Always use secondary containment, such as a drain pan, when fueling to catch spills/ leaks.

Costs

Prevention of leaks and spills is inexpensive. Treatment and/ or disposal of contaminated soil or water can be quite expensive.

Inspection and Maintenance

- Inspect and verify that activity–based BMPs are in place prior to the commencement of associated activities. While activities associated with the BMP are under way, inspect BMPs in accordance with General Permit requirements for the associated project type and risk level. It is recommended that at a minimum, BMPs be inspected weekly, prior to forecasted rain events, daily during extended rain events, and after the conclusion of rain events.

- Spills should be cleaned up immediately:
  - Contain spread of the spill.
  - Notify the project foreman immediately.
  - If the spill occurs on paved or impermeable surfaces, clean up using "dry" methods (absorbent materials, cat litter and/or rags). Contain the spill by encircling with absorbent materials and do not let the spill spread widely.
  - If the spill occurs in dirt areas, immediately contain the spill by constructing an earthen dike. Dig up and properly dispose of contaminated soil.
  - If the spill occurs during rain, cover spill with tarps or other material to prevent contaminating runoff.

Significant/Hazardous Spills

- For significant or hazardous spills that cannot be controlled by personnel in the immediate vicinity, the following steps should be taken:
  - Notify the local emergency response by dialing 911. In addition to 911, the contractor will notify the proper county officials. It is the contractor's responsibility to have all emergency phone numbers at the construction site.
  - Notify the Governor's Office of Emergency Services Warning Center, (916) 845-8911.
  - For spills of federal reportable quantities, in conformance with the requirements in 40 CFR parts 110,119, and 302, the contractor should notify the National Response Center at (800) 424-8802.
  - Notification should first be made by telephone and followed up with a written report.
  - The services of a spills contractor or a Haz-Mat team should be obtained immediately. Construction personnel should not attempt to clean up until the appropriate and qualified staffs have arrived at the job site.
  - Other agencies which may need to be consulted include, but are not limited to, the Fire Department, the Public Works Department, the Coast Guard, the Highway Patrol, the City/County Police Department, Department of Toxic Substances, California Division of Oil and Gas, Cal/OSHA, etc.

Reporting

- Report significant spills to local agencies, such as the Fire Department; they can assist in cleanup.
- Federal regulations require that any significant oil spill into a water body or onto an adjoining shoreline be reported to the National Response Center (NRC) at 800-424-8802 (24 hours).

Use the following measures related to specific activities:

- Store and dispose of used clean up materials, contaminated materials, and recovered spill material that is no longer suitable for the intended purpose in conformance with the provisions in applicable BMPs.
- Do not allow water used for cleaning and decontamination to enter storm drains or watercourses. Collect and dispose of contaminated water in accordance with WM-10, Liquid Waste Management.
- Contain water overflow or minor water spillage and do not allow it to discharge into drainage facilities or watercourses.
- Place proper storage, cleanup, and spill reporting instructions for hazardous materials stored or used on the project site in an open, conspicuous, and accessible location.
- Keep waste storage areas clean, well organized, and equipped with ample cleanup supplies as appropriate for the materials being stored. Perimeter controls, containment structures, covers, and liners should be repaired or replaced as needed to maintain proper function.

Cleanup

- Clean up leaks and spills immediately.
- Use a rag for small spills on paved surfaces, a damp mop for general cleanup, and absorbent material for larger spills. If the spilled material is hazardous, then the used cleanup materials are also hazardous and must be sent to either a certified laundry (rags) or disposed of as hazardous waste.
- Never hose down or bury dry material spills. Clean up as much of the material as possible and dispose of properly. See the waste management BMPs in this section for specific information.

Minor Spills

- Minor spills typically involve small quantities of oil, gasoline, paint, etc. which can be controlled by the first responder at the discovery of the spill.
- Use absorbent materials on small spills rather than hosing down or burying the spill.
- Absorbent materials should be promptly removed and disposed of properly.
- Follow the practice below for a minor spill:
  - Contain the spread of the spill.
  - Recover spilled materials.
  - Clean the contaminated area and properly dispose of contaminated materials.

Semi-Significant Spills

- Semi-significant spills still can be controlled by the first responder along with the aid of other personnel such as laborers and the foreman, etc. This response may require the cessation of all other activities.

- Fuels
- Lubricants
- Other petroleum distillates

Limitations

- In some cases it may be necessary to use a private spill cleanup company.
- This BMP applies to spills caused by the contractor and subcontractors.
- Procedures and practices presented in this BMP are general. Contractor should identify appropriate practices for the specific materials used or stored onsite

Implementation

The following steps will help reduce the stormwater impacts of leaks and spills:

Education

- Be aware that different materials pollute in different amounts. Make sure that each employee knows what a "significant spill" is for each material they use, and what is the appropriate response for "significant" and "insignificant" spills.
- Educate employees and subcontractors on potential dangers to humans and the environment from spills and leaks.
- Hold regular meetings to discuss and reinforce appropriate disposal procedures (incorporate into regular safety meetings).
- Establish a continuing education program to indoctrinate new employees.
- Have contractor's superintendent or representative oversee and enforce proper spill prevention and control measures.

General Measures

- To the extent that the work can be accomplished safely, spills of oil, petroleum products, substances listed under 40 CFR parts 110,117, and 302, and sanitary and septic wastes should be contained and cleaned up immediately.
- Store hazardous materials and wastes in covered containers and protect from vandalism.
- Place a stockpile of spill cleanup materials where it will be readily accessible.
- Train employees in spill prevention and cleanup.
- Designate responsible individuals to oversee and enforce control measures.
- Spills should be covered and protected from stormwater runon during rainfall to the extent that it doesn't compromise clean up activities.
- Do not bury or wash spills with water.

- For disposal of hazardous waste, see WM-6, Hazardous Waste Management. Have hazardous waste hauled to an appropriate disposal and/or recycling facility.

- Salvage or recycle useful vegetation debris, packaging and surplus building materials when practical. For example, trees and shrubs from land clearing can be used as a brush barrier, or converted into wood chips, then used as mulch on graded areas. Wood pallets, cardboard boxes, and construction scraps can also be recycled.

Costs

All of the above are low cost measures.

Inspection and Maintenance

- Inspect and verify that activity–based BMPs are in place prior to the commencement of associated activities. While activities associated with the BMP are under way, inspect BMPs in accordance with General Permit requirements for the associated project type and risk level. It is recommended that at a minimum, BMPs be inspected weekly, prior to forecasted rain events, daily during extended rain events, and after the conclusion of rain events.

- Inspect BMPs subject to non-stormwater discharge daily while non-stormwater discharges occur

- Inspect construction waste area regularly.

- Arrange for regular waste collection.

References

Processes, Procedures and Methods to Control Pollution Resulting from All Construction Activity, 430/9-73-007, USEPA, 1973.

Stormwater Quality Handbooks - Construction Site Best Management Practices (BMPs) Manual, State of California Department of Transportation (Caltrans), November 2000.

Stormwater Management for Construction Activities; Developing Pollution Prevention Plans and Best Management Practice, EPA 832-R-92005; USEPA, April 1992.

Hazardous Waste Management WM-6

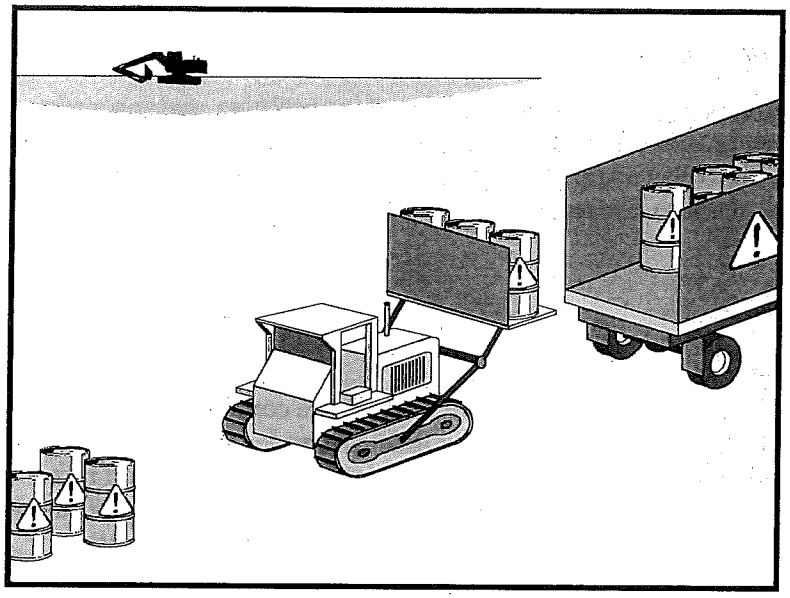

Categories		
EC	Erosion Control	
SE	Sediment Control	
TC	Tracking Control	
WE	Wind Erosion Control	
NS	Non-Stormwater Management Control	
WM	Waste Management and Materials Pollution Control	☑

Legend:

☑ **Primary Objective**

☒ **Secondary Objective**

Targeted Constituents	
Sediment	
Nutrients	☑
Trash	☑
Metals	☑
Bacteria	☑
Oil and Grease	☑
Organics	☑

Potential Alternatives

None

If User/Subscriber modifies this fact sheet in any way, the CASQA name/logo and footer below must be removed from each page and not appear on the modified version.

Description and Purpose

Prevent or reduce the discharge of pollutants to stormwater from hazardous waste through proper material use, waste disposal, and training of employees and subcontractors.

Suitable Applications

This best management practice (BMP) applies to all construction projects. Hazardous waste management practices are implemented on construction projects that generate waste from the use of:

- Petroleum Products
- Concrete Curing Compounds
- Palliatives
- Septic Wastes
- Stains
- Wood Preservatives
- Asphalt Products
- Pesticides
- Acids
- Paints
- Solvents
- Roofing Tar
- Any materials deemed a hazardous waste in California, Title 22 Division 4.5, or listed in 40 CFR Parts 110, 117, 261, or 302

CASQA
CALIFORNIA STORMWATER QUALITY ASSOCIATION

In addition, sites with existing structures may contain wastes, which must be disposed of in accordance with federal, state, and local regulations. These wastes include:

- Sandblasting grit mixed with lead-, cadmium-, or chromium-based paints
- Asbestos
- PCBs (particularly in older transformers)

Limitations

- Hazardous waste that cannot be reused or recycled must be disposed of by a licensed hazardous waste hauler.
- Nothing in this BMP relieves the contractor from responsibility for compliance with federal, state, and local laws regarding storage, handling, transportation, and disposal of hazardous wastes.
- This BMP does not cover aerially deposited lead (ADL) soils. For ADL soils refer to WM-7, Contaminated Soil Management.

Implementation

The following steps will help reduce stormwater pollution from hazardous wastes:

Material Use

- Wastes should be stored in sealed containers constructed of a suitable material and should be labeled as required by Title 22 CCR, Division 4.5 and 49 CFR Parts 172, 173, 178, and 179.
- All hazardous waste should be stored, transported, and disposed as required in Title 22 CCR, Division 4.5 and 49 CFR 261-263.
- Waste containers should be stored in temporary containment facilities that should comply with the following requirements:
  - Temporary containment facility should provide for a spill containment volume equal to 1.5 times the volume of all containers able to contain precipitation from a 25 year storm event, plus the greater of 10% of the aggregate volume of all containers or 100% of the capacity of the largest tank within its boundary, whichever is greater.
  - Temporary containment facility should be impervious to the materials stored there for a minimum contact time of 72 hours.
  - Temporary containment facilities should be maintained free of accumulated rainwater and spills. In the event of spills or leaks, accumulated rainwater and spills should be placed into drums after each rainfall. These liquids should be handled as a hazardous waste unless testing determines them to be non-hazardous. Non-hazardous liquids should be sent to an approved disposal site.
  - Sufficient separation should be provided between stored containers to allow for spill cleanup and emergency response access.

- Incompatible materials, such as chlorine and ammonia, should not be stored in the same temporary containment facility.
- Throughout the rainy season, temporary containment facilities should be covered during non-working days, and prior to rain events. Covered facilities may include use of plastic tarps for small facilities or constructed roofs with overhangs.

- Drums should not be overfilled and wastes should not be mixed.
- Unless watertight, containers of dry waste should be stored on pallets.
- Do not over-apply herbicides and pesticides. Prepare only the amount needed. Follow the recommended usage instructions. Over application is expensive and environmentally harmful. Apply surface dressings in several smaller applications, as opposed to one large application. Allow time for infiltration and avoid excess material being carried offsite by runoff. Do not apply these chemicals just before it rains. People applying pesticides must be certified in accordance with federal and state regulations.
- Paint brushes and equipment for water and oil based paints should be cleaned within a contained area and should not be allowed to contaminate site soils, watercourses, or drainage systems. Waste paints, thinners, solvents, residues, and sludges that cannot be recycled or reused should be disposed of as hazardous waste. When thoroughly dry, latex paint and paint cans, used brushes, rags, absorbent materials, and drop cloths should be disposed of as solid waste.
- Do not clean out brushes or rinse paint containers into the dirt, street, gutter, storm drain, or stream. "Paint out" brushes as much as possible. Rinse water-based paints to the sanitary sewer. Filter and reuse thinners and solvents. Dispose of excess oil-based paints and sludge as hazardous waste.
- The following actions should be taken with respect to temporary contaminant:
  - Ensure that adequate hazardous waste storage volume is available.
  - Ensure that hazardous waste collection containers are conveniently located.
  - Designate hazardous waste storage areas onsite away from storm drains or watercourses and away from moving vehicles and equipment to prevent accidental spills.
  - Minimize production or generation of hazardous materials and hazardous waste on the job site.
  - Use containment berms in fueling and maintenance areas and where the potential for spills is high.
  - Segregate potentially hazardous waste from non-hazardous construction site debris.
  - Keep liquid or semi-liquid hazardous waste in appropriate containers (closed drums or similar) and under cover.

- Clearly label all hazardous waste containers with the waste being stored and the date of accumulation.
- Place hazardous waste containers in secondary containment.
- Do not allow potentially hazardous waste materials to accumulate on the ground.
- Do not mix wastes.
- Use all of the product before disposing of the container.
- Do not remove the original product label; it contains important safety and disposal information.

Waste Recycling Disposal

- Select designated hazardous waste collection areas onsite.
- Hazardous materials and wastes should be stored in covered containers and protected from vandalism.
- Place hazardous waste containers in secondary containment.
- Do not mix wastes, this can cause chemical reactions, making recycling impossible and complicating disposal.
- Recycle any useful materials such as used oil or water-based paint.
- Make sure that toxic liquid wastes (used oils, solvents, and paints) and chemicals (acids, pesticides, additives, curing compounds) are not disposed of in dumpsters designated for construction debris.
- Arrange for regular waste collection before containers overflow.
- Make sure that hazardous waste (e.g., excess oil-based paint and sludge) is collected, removed, and disposed of only at authorized disposal areas.

Disposal Procedures

- Waste should be disposed of by a licensed hazardous waste transporter at an authorized and licensed disposal facility or recycling facility utilizing properly completed Uniform Hazardous Waste Manifest forms.
- A Department of Health Services certified laboratory should sample waste to determine the appropriate disposal facility.
- Properly dispose of rainwater in secondary containment that may have mixed with hazardous waste.
- Attention is directed to "Hazardous Material", "Contaminated Material", and "Aerially Deposited Lead" of the contract documents regarding the handling and disposal of hazardous materials.

Education

- Educate employees and subcontractors on hazardous waste storage and disposal procedures.
- Educate employees and subcontractors on potential dangers to humans and the environment from hazardous wastes.
- Instruct employees and subcontractors on safety procedures for common construction site hazardous wastes.
- Instruct employees and subcontractors in identification of hazardous and solid waste.
- Hold regular meetings to discuss and reinforce hazardous waste management procedures (incorporate into regular safety meetings).
- The contractor's superintendent or representative should oversee and enforce proper hazardous waste management procedures and practices.
- Make sure that hazardous waste is collected, removed, and disposed of only at authorized disposal areas.
- Warning signs should be placed in areas recently treated with chemicals.
- Place a stockpile of spill cleanup materials where it will be readily accessible.
- If a container does spill, clean up immediately.

Costs

All of the above are low cost measures.

Inspection and Maintenance

- Inspect and verify that activity–based BMPs are in place prior to the commencement of associated activities. While activities associated with the BMP are under way, inspect BMPs in accordance with General Permit requirements for the associated project type and risk level. It is recommended that at a minimum, BMPs be inspected weekly, prior to forecasted rain events, daily during extended rain events, and after the conclusion of rain events..
- Inspect BMPs subject to non-stormwater discharge daily while non-stormwater discharges occur
- Hazardous waste should be regularly collected.
- A foreman or construction supervisor should monitor onsite hazardous waste storage and disposal procedures.
- Waste storage areas should be kept clean, well organized, and equipped with ample cleanup supplies as appropriate for the materials being stored.
- Perimeter controls, containment structures, covers, and liners should be repaired or replaced as needed to maintain proper function.

- Hazardous spills should be cleaned up and reported in conformance with the applicable Material Safety Data Sheet (MSDS) and the instructions posted at the project site.
- The National Response Center, at (800) 424-8802, should be notified of spills of federal reportable quantities in conformance with the requirements in 40 CFR parts 110, 117, and 302. Also notify the Governors Office of Emergency Services Warning Center at (916) 845-8911.
- A copy of the hazardous waste manifests should be provided.

References

Blueprint for a Clean Bay: Best Management Practices to Prevent Stormwater Pollution from Construction Related Activities; Santa Clara Valley Nonpoint Source Pollution Control Program, 1995.

Processes, Procedures and Methods to Control Pollution Resulting from All Construction Activity, 430/9-73-007, USEPA, 1973.

Stormwater Quality Handbooks - Construction Site Best Management Practices (BMPs) Manual, State of California Department of Transportation (Caltrans), November 2000.

Stormwater Management for Construction Activities; Developing Pollution Prevention Plans and Best Management Practice, EPA 832-R-92005; USEPA, April 1992.

Concrete Waste Management WM-8

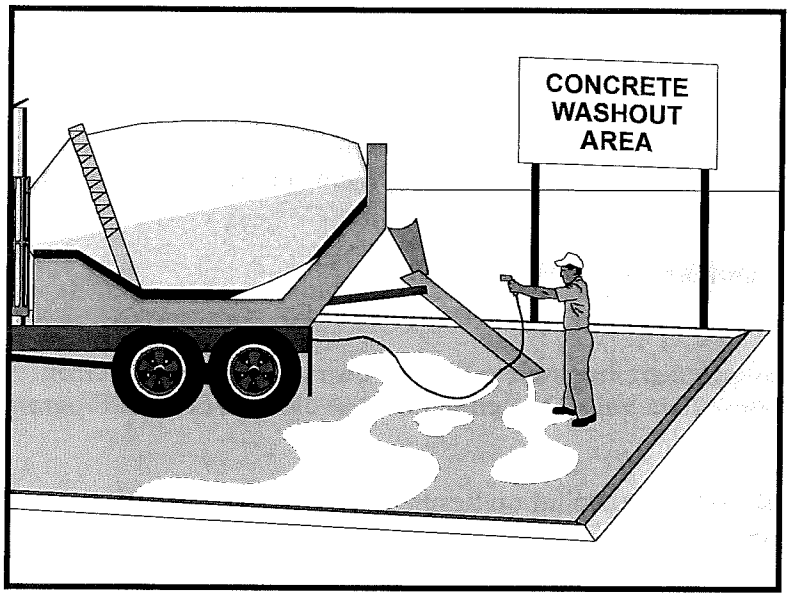

Categories

EC	Erosion Control	
SE	Sediment Control	
TC	Tracking Control	
WE	Wind Erosion Control	
NS	Non-Stormwater Management Control	☒
WM	Waste Management and Materials Pollution Control	☑

Legend:

☑ **Primary Category**

☒ **Secondary Category**

Targeted Constituents

Sediment	☑
Nutrients	
Trash	
Metals	☑
Bacteria	
Oil and Grease	
Organics	

Potential Alternatives

None

If User/Subscriber modifies this fact sheet in any way, the CASQA name/logo and footer below must be removed from each page and not appear on the modified version.

Description and Purpose

Prevent the discharge of pollutants to stormwater from concrete waste by conducting washout onsite or offsite in a designated area, and by employee and subcontractor training.

The General Permit incorporates Numeric Action Levels (NAL) for pH (see Section 2 of this handbook to determine your project's risk level and if you are subject to these requirements).

Many types of construction materials, including mortar, concrete, stucco, cement and block and their associated wastes have basic chemical properties that can raise pH levels outside of the permitted range. Additional care should be taken when managing these materials to prevent them from coming into contact with stormwater flows and raising pH to levels outside the accepted range.

Suitable Applications

Concrete waste management procedures and practices are implemented on construction projects where:

- Concrete is used as a construction material or where concrete dust and debris result from demolition activities.
- Slurries containing portland cement concrete (PCC) are generated, such as from saw cutting, coring, grinding, grooving, and hydro-concrete demolition.
- Concrete trucks and other concrete-coated equipment are washed onsite.

CASQA
CALIFORNIA STORMWATER QUALITY ASSOCIATION

- Mortar-mixing stations exist.
- Stucco mixing and spraying.
- See also NS-8, Vehicle and Equipment Cleaning.

Limitations

- Offsite washout of concrete wastes may not always be possible.
- Multiple washouts may be needed to assure adequate capacity and to allow for evaporation.

Implementation

The following steps will help reduce stormwater pollution from concrete wastes:

- Incorporate requirements for concrete waste management into material supplier and subcontractor agreements.
- Store dry and wet materials under cover, away from drainage areas. Refer to WM-1, Material Delivery and Storage for more information.
- Avoid mixing excess amounts of concrete.
- Perform washout of concrete trucks in designated areas only, where washout will not reach stormwater.
- Do not wash out concrete trucks into storm drains, open ditches, streets, streams or onto the ground. Trucks should always be washed out into designated facilities.
- Do not allow excess concrete to be dumped onsite, except in designated areas.
- For onsite washout:
  - On larger sites, it is recommended to locate washout areas at least 50 feet from storm drains, open ditches, or water bodies. Do not allow runoff from this area by constructing a temporary pit or bermed area large enough for liquid and solid waste.
  - Washout wastes into the temporary washout where the concrete can set, be broken up, and then disposed properly.
  - Washouts shall be implemented in a manner that prevents leaching to underlying soils. Washout containers must be water tight and washouts on or in the ground must be lined with a suitable impervious liner, typically a plastic type material.
- Do not wash sweepings from exposed aggregate concrete into the street or storm drain. Collect and return sweepings to aggregate base stockpile or dispose in the trash.
- See typical concrete washout installation details at the end of this fact sheet.

Education

- Educate employees, subcontractors, and suppliers on the concrete waste management techniques described herein.

- Arrange for contractor's superintendent or representative to oversee and enforce concrete waste management procedures.
- Discuss the concrete management techniques described in this BMP (such as handling of concrete waste and washout) with the ready-mix concrete supplier before any deliveries are made.

Concrete Demolition Wastes

- Stockpile concrete demolition waste in accordance with BMP WM-3, Stockpile Management.
- Dispose of or recycle hardened concrete waste in accordance with applicable federal, state or local regulations.

Concrete Slurry Wastes

- PCC and AC waste should not be allowed to enter storm drains or watercourses.
- PCC and AC waste should be collected and disposed of or placed in a temporary concrete washout facility (as described in Onsite Temporary Concrete Washout Facility, Concrete Transit Truck Washout Procedures, below).
- A foreman or construction supervisor should monitor onsite concrete working tasks, such as saw cutting, coring, grinding and grooving to ensure proper methods are implemented.
- Saw-cut concrete slurry should not be allowed to enter storm drains or watercourses. Residue from grinding operations should be picked up by means of a vacuum attachment to the grinding machine or by sweeping. Saw cutting residue should not be allowed to flow across the pavement and should not be left on the surface of the pavement. See also NS-3, Paving and Grinding Operations; and WM-10, Liquid Waste Management.
- Concrete slurry residue should be disposed in a temporary washout facility (as described in Onsite Temporary Concrete Washout Facility, Concrete Transit Truck Washout Procedures, below) and allowed to dry. Dispose of dry slurry residue in accordance with WM-5, Solid Waste Management.

Onsite Temporary Concrete Washout Facility, Transit Truck Washout Procedures

- Temporary concrete washout facilities should be located a minimum of 50 ft from storm drain inlets, open drainage facilities, and watercourses. Each facility should be located away from construction traffic or access areas to prevent disturbance or tracking.
- A sign should be installed adjacent to each washout facility to inform concrete equipment operators to utilize the proper facilities.
- Temporary concrete washout facilities should be constructed above grade or below grade at the option of the contractor. Temporary concrete washout facilities should be constructed and maintained in sufficient quantity and size to contain all liquid and concrete waste generated by washout operations.

- Temporary washout facilities should have a temporary pit or bermed areas of sufficient volume to completely contain all liquid and waste concrete materials generated during washout procedures.
- Temporary washout facilities should be lined to prevent discharge to the underlying ground or surrounding area.
- Washout of concrete trucks should be performed in designated areas only.
- Only concrete from mixer truck chutes should be washed into concrete wash out.
- Concrete washout from concrete pumper bins can be washed into concrete pumper trucks and discharged into designated washout area or properly disposed of or recycled offsite.
- Once concrete wastes are washed into the designated area and allowed to harden, the concrete should be broken up, removed, and disposed of per WM-5, Solid Waste Management. Dispose of or recycle hardened concrete on a regular basis.
- Temporary Concrete Washout Facility (Type Above Grade)
  - Temporary concrete washout facility (type above grade) should be constructed as shown on the details at the end of this BMP, with a recommended minimum length and minimum width of 10 ft; however, smaller sites or jobs may only need a smaller washout facility. With any washout, always maintain a sufficient quantity and volume to contain all liquid and concrete waste generated by washout operations.
  - Materials used to construct the washout area should conform to the provisions detailed in their respective BMPs (e.g., SE-8 Sandbag Barrier).
  - Plastic lining material should be a minimum of 10 mil in polyethylene sheeting and should be free of holes, tears, or other defects that compromise the impermeability of the material.
  - Alternatively, portable removable containers can be used as above grade concrete washouts. Also called a "roll-off"; this concrete washout facility should be properly sealed to prevent leakage, and should be removed from the site and replaced when the container reaches 75% capacity.
- Temporary Concrete Washout Facility (Type Below Grade)
  - Temporary concrete washout facilities (type below grade) should be constructed as shown on the details at the end of this BMP, with a recommended minimum length and minimum width of 10 ft. The quantity and volume should be sufficient to contain all liquid and concrete waste generated by washout operations.
  - Lath and flagging should be commercial type.
  - Plastic lining material should be a minimum of 10 mil polyethylene sheeting and should be free of holes, tears, or other defects that compromise the impermeability of the material.

- The base of a washout facility should be free of rock or debris that may damage a plastic liner.

Removal of Temporary Concrete Washout Facilities

- When temporary concrete washout facilities are no longer required for the work, the hardened concrete should be removed and properly disposed or recycled in accordance with federal, state or local regulations. Materials used to construct temporary concrete washout facilities should be removed from the site of the work and properly disposed or recycled in accordance with federal, state or local regulations..

- Holes, depressions or other ground disturbance caused by the removal of the temporary concrete washout facilities should be backfilled and repaired.

Costs

All of the above are low cost measures. Roll-off concrete washout facilities can be more costly than other measures due to removal and replacement; however, provide a cleaner alternative to traditional washouts. The type of washout facility, size, and availability of materials will determine the cost of the washout.

Inspection and Maintenance

- BMPs must be inspected in accordance with General Permit requirements for the associated project type and risk level. It is recommended that at a minimum, BMPs be inspected weekly, prior to forecasted rain events, daily during extended rain events, and after the conclusion of rain events.

- Temporary concrete washout facilities should be maintained to provide adequate holding capacity with a minimum freeboard of 4 in. for above grade facilities and 12 in. for below grade facilities. Maintaining temporary concrete washout facilities should include removing and disposing of hardened concrete and returning the facilities to a functional condition. Hardened concrete materials should be removed and properly disposed or recycled in accordance with federal, state or local regulations.

- Washout facilities must be cleaned, or new facilities must be constructed and ready for use once the washout is 75% full.

- Inspect washout facilities for damage (e.g. torn liner, evidence of leaks, signage, etc.). Repair all identified damage.

References

Blueprint for a Clean Bay: Best Management Practices to Prevent Stormwater Pollution from Construction Related Activities; Santa Clara Valley Nonpoint Source Pollution Control Program, 1995.

Stormwater Quality Handbooks - Construction Site Best Management Practices (BMPs) Manual, State of California Department of Transportation (Caltrans), November 2000, Updated March 2003.

Stormwater Management for Construction Activities; Developing Pollution Prevention Plans and Best Management Practice, EPA 832-R-92005; USEPA, April 1992.

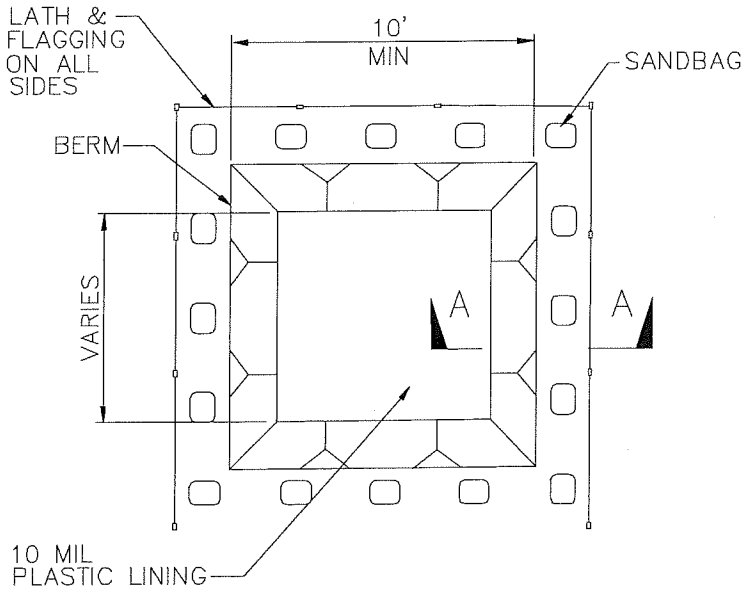

PLAN
NOT TO SCALE
TYPE "BELOW GRADE"

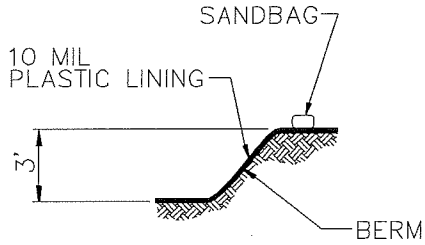

SECTION A–A
NOT TO SCALE

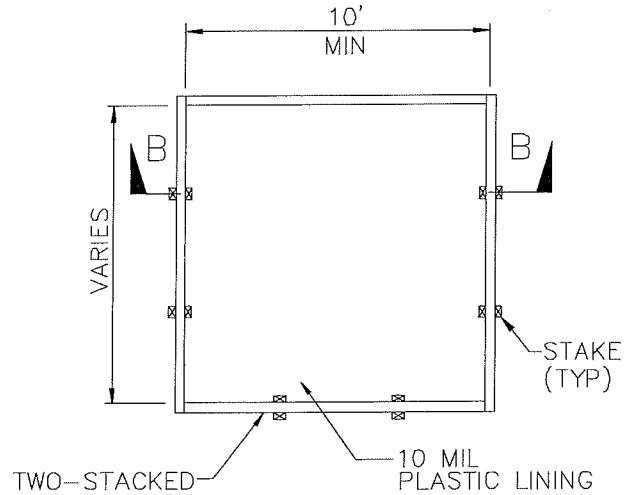

PLAN
NOT TO SCALE
TYPE "ABOVE GRADE"

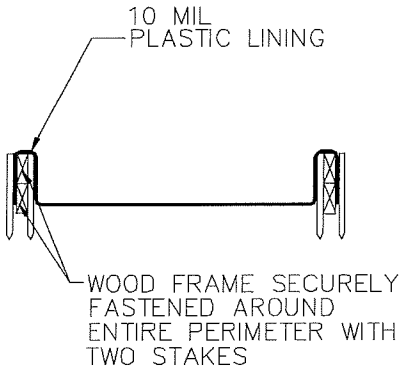

SECTION B–B
NOT TO SCALE

NOTES

1. ACTUAL LAYOUT DETERMINED IN FIELD.
2. THE CONCRETE WASHOUT SIGN SHALL BE INSTALLED WITHIN 30 FT. OF THE TEMPORARY CONCRETE WASHOUT FACILITY.

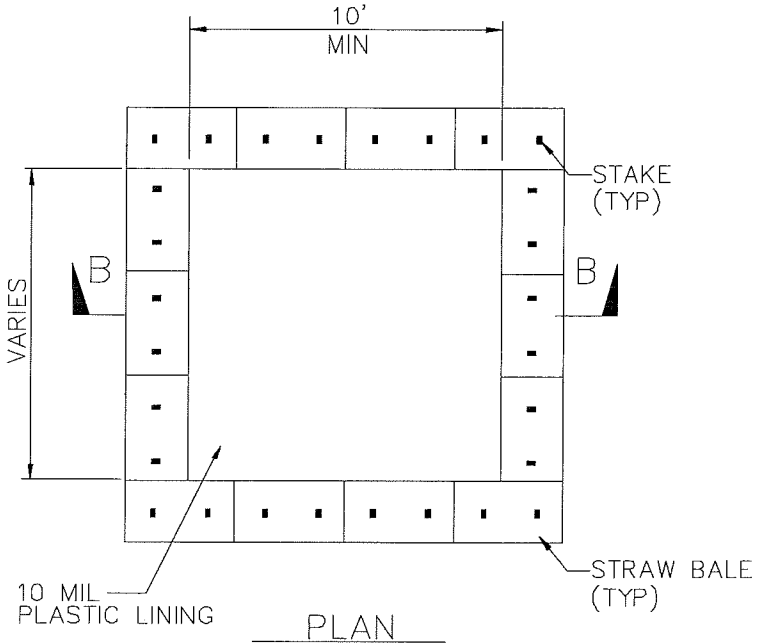

PLAN
NOT TO SCALE
TYPE "ABOVE GRADE"
WITH STRAW BALES

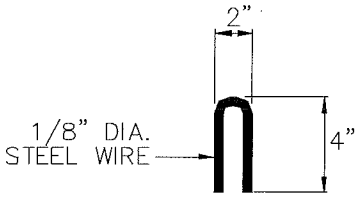

STAPLE DETAIL

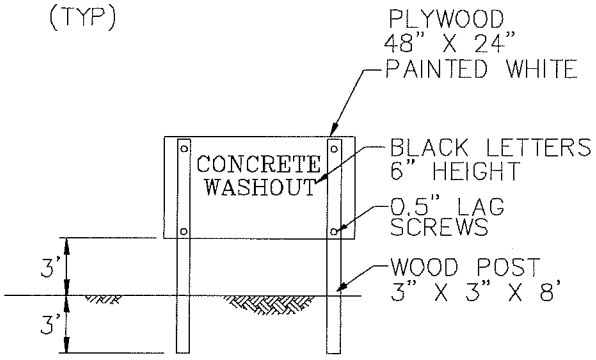

CONCRETE WASHOUT
SIGN DETAIL
(OR EQUIVALENT)

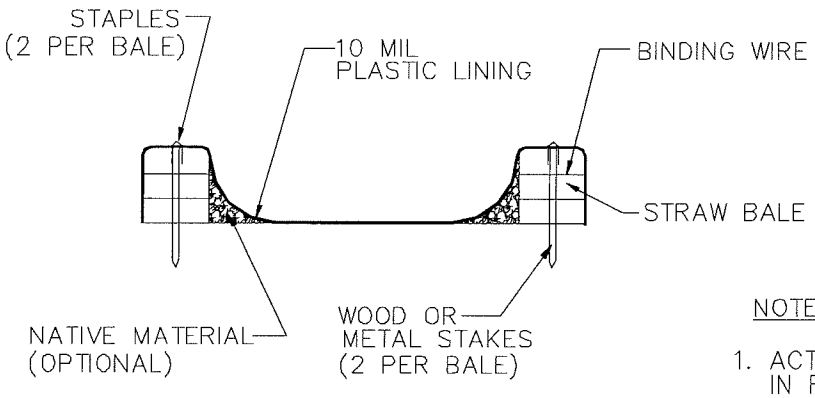

SECTION B–B
NOT TO SCALE

NOTES

1. ACTUAL LAYOUT DETERMINED IN FIELD.
2. THE CONCRETE WASHOUT SIGN SHALL BE INSTALLED WITHIN 30 FT. OF THE TEMPORARY CONCRETE WASHOUT FACILITY.

Sanitary/Septic Waste Management WM-9

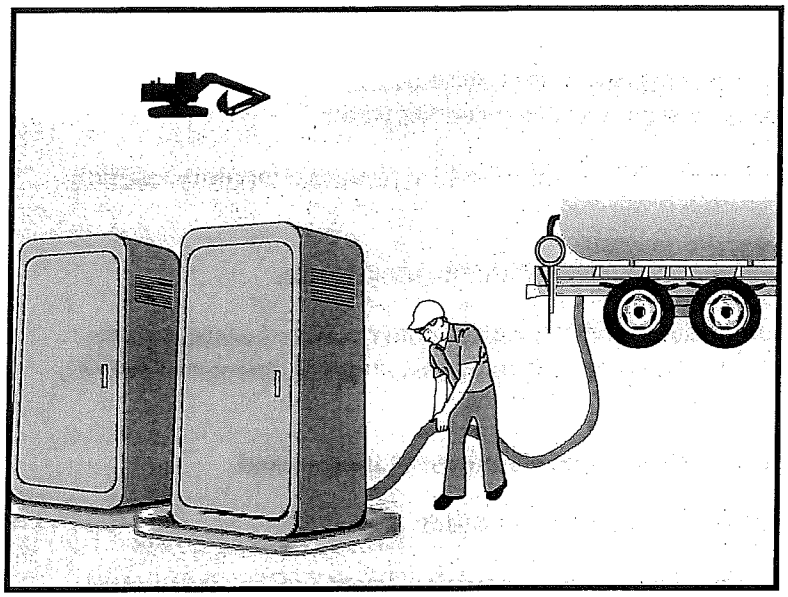

Categories

EC	Erosion Control	
SE	Sediment Control	
TC	Tracking Control	
WE	Wind Erosion Control	
NS	Non-Stormwater Management Control	
WM	Waste Management and Materials Pollution Control	☑

Legend:

☑ **Primary Category**

☒ **Secondary Category**

Targeted Constituents

Sediment	
Nutrients	☑
Trash	☑
Metals	
Bacteria	☑
Oil and Grease	
Organics	☑

Potential Alternatives

None

If User/Subscriber modifies this fact sheet in any way, the CASQA name/logo and footer below must be removed from each page and not appear on the modified version.

Description and Purpose

Proper sanitary and septic waste management prevent the discharge of pollutants to stormwater from sanitary and septic waste by providing convenient, well-maintained facilities, and arranging for regular service and disposal.

Suitable Applications

Sanitary septic waste management practices are suitable for use at all construction sites that use temporary or portable sanitary and septic waste systems.

Limitations

None identified.

Implementation

Sanitary or septic wastes should be treated or disposed of in accordance with state and local requirements. In many cases, one contract with a local facility supplier will be all that it takes to make sure sanitary wastes are properly disposed.

Storage and Disposal Procedures

- Temporary sanitary facilities should be located away from drainage facilities, watercourses, and from traffic circulation. If site conditions allow, place portable facilities a minimum of 50 feet from drainage conveyances and traffic areas. When subjected to high winds or risk of high winds, temporary sanitary facilities should be secured to prevent overturning.

CASQA
CALIFORNIA STORMWATER QUALITY ASSOCIATION

- Temporary sanitary facilities must be equipped with containment to prevent discharge of pollutants to the stormwater drainage system of the receiving water.
- Consider safety as well as environmental implications before placing temporary sanitary facilities.
- Wastewater should not be discharged or buried within the project site.
- Sanitary and septic systems that discharge directly into sanitary sewer systems, where permissible, should comply with the local health agency, city, county, and sewer district requirements.
- Only reputable, licensed sanitary and septic waste haulers should be used.
- Sanitary facilities should be located in a convenient location.
- Temporary septic systems should treat wastes to appropriate levels before discharging.
- If using an onsite disposal system (OSDS), such as a septic system, local health agency requirements must be followed.
- Temporary sanitary facilities that discharge to the sanitary sewer system should be properly connected to avoid illicit discharges.
- Sanitary and septic facilities should be maintained in good working order by a licensed service.
- Regular waste collection by a licensed hauler should be arranged before facilities overflow.
- If a spill does occur from a temporary sanitary facility, follow federal, state and local regulations for containment and clean-up.

Education

- Educate employees, subcontractors, and suppliers on sanitary and septic waste storage and disposal procedures.
- Educate employees, subcontractors, and suppliers of potential dangers to humans and the environment from sanitary and septic wastes.
- Instruct employees, subcontractors, and suppliers in identification of sanitary and septic waste.
- Hold regular meetings to discuss and reinforce the use of sanitary facilities (incorporate into regular safety meetings).
- Establish a continuing education program to indoctrinate new employees.

Costs

All of the above are low cost measures.

Inspection and Maintenance

- BMPs must be inspected in accordance with General Permit requirements for the associated project type and risk level. It is recommended that at a minimum, BMPs be inspected weekly, prior to forecasted rain events, daily during extended rain events, and after the conclusion of rain events.
- Arrange for regular waste collection.
- If high winds are expected, portable sanitary facilities must be secured with spikes or weighed down to prevent over turning.
- If spills or leaks from sanitary or septic facilities occur that are not contained and discharge from the site, non-visible sampling of site discharge may be required. Refer to the General Permit or to your project specific Construction Site Monitoring Plan to determine if and where sampling is required.

References

Stormwater Quality Handbooks - Construction Site Best Management Practices (BMPs) Manual, State of California Department of Transportation (Caltrans), March 2003.

Stormwater Management for Construction Activities; Developing Pollution Prevention Plans and Best Management Practice, EPA 832-R-92005; USEPA, April 1992.

Appendix I: BMP Inspection Form

BMP INSPECTION REPORT

Date and Time of Inspection:		Date Report Written:		
Inspection Type: (Circle one)	Weekly *Complete Parts I,II,III and VII*	Pre-Storm *Complete Parts I,II,III,IV and VII*	During Rain Event *Complete Parts I, II, III, V, and VII*	Post-Storm *Complete Parts I,II,III,VI and VII*

Part I. General Information

Site Information

Construction Site Name:			
Construction stage and completed activities:			Approximate area of site that is exposed:
Photos Taken: (Circle one)	Yes	No	Photo Reference IDs:

Weather

Estimate storm beginning: (date and time)	Estimate storm duration: (hours)
Estimate time since last storm: (days or hours)	Rain gauge reading and location: (in)

Is a "Qualifying Event" predicted or did one occur (i.e., 0.5" rain with 48-hrs or greater between events)? (Y/N)
If yes, summarize forecast:

Exemption Documentation (explanation required if inspection could not be conducted). Visual inspections are not required outside of business hours or during dangerous weather conditions such as flooding or electrical storms.

Inspector Information

Inspector Name:	Inspector Title:
Signature:	Date:

Part II. BMP Observations. **Describe deficiencies in Part III.**			
Minimum BMPs for Risk Level _____ Sites	Failures or other short comings (yes, no, N/A)	Action Required (yes/no)	Action Implemented (Date)
Good Housekeeping for Construction Materials			
Inventory of products (excluding materials designed to be outdoors)			
Stockpiled construction materials not actively in use are covered and bermed			
All chemicals are stored in watertight containers with appropriate secondary containment, or in a completely enclosed storage shed			
Construction materials are minimally exposed to precipitation			
BMPs preventing the off-site tracking of materials are implemented and properly effective			
Good Housekeeping for Waste Management			
Wash/rinse water and materials are prevented from being disposed into the storm drain system			
Portable toilets are contained to prevent discharges of waste			
Sanitation facilities are clean and with no apparent for leaks and spills			
Equipment is in place to cover waste disposal containers at the end of business day and during rain events			
Discharges from waste disposal containers are prevented from discharging to the storm drain system / receiving water			
Stockpiled waste material is securely protected from wind and rain if not actively in use			
Procedures are in place for addressing hazardous and non-hazardous spills			
Appropriate spill response personnel are assigned and trained			
Equipment and materials for cleanup of spills is available onsite			
Washout areas (e.g., concrete) are contained appropriately to prevent discharge or infiltration into the underlying soil			
Good Housekeeping for Vehicle Storage and Maintenance			
Measures are in place to prevent oil, grease, or fuel from leaking into the ground, storm drains, or surface waters			
All equipment or vehicles are fueled, maintained, and stored in a designated area with appropriate BMPs			
Vehicle and equipment leaks are cleaned immediately and disposed of properly			

Part II. BMP Observations Continued. **Describe deficiencies in Part III.**			
Minimum BMPs for Risk Level _____ Sites	Adequately designed, implemented and effective (yes, no, N/A)	Action Required (yes/no)	Action Implemented (Date)
Good Housekeeping for Landscape Materials			
Stockpiled landscape materials such as mulches and topsoil are contained and covered when not actively in use			
Erodible landscape material has not been applied 2 days before a forecasted rain event or during an event			
Erodible landscape materials are applied at quantities and rates in accordance with manufacturer recommendations			
Bagged erodible landscape materials are stored on pallets and covered			
Good Housekeeping for Air Deposition of Site Materials			
Good housekeeping measures are implemented onsite to control the air deposition of site materials and from site operations			
Non-Stormwater Management			
Non-Stormwater discharges are properly controlled			
Vehicles are washed in a manner to prevent non-stormwater discharges to surface waters or drainage systems			
Streets are cleaned in a manner to prevent unauthorized non-stormwater discharges to surface waters or drainage systems.			
Erosion Controls			
Wind erosion controls are effectively implemented			
Effective soil cover is provided for disturbed areas inactive (i.e., not scheduled to be disturbed for 14 days) as well as finished slopes, open space, utility backfill, and completed lots			
The use of plastic materials is limited in cases when a more sustainable, environmentally friendly alternative exists.			
Sediment Controls			
Perimeter controls are established and effective at controlling erosion and sediment discharges from the site			
Entrances and exits are stabilized to control erosion and sediment discharges from the site			
Sediment basins are properly maintained			
Linear sediment control along toe of slope, face of slope an at grade breaks (Risk Level 2 & 3 Only)			
Limit construction activity to and from site to entrances and exits that employ effective controls to prevent offsite tracking (Risk Level 2 & 3 Only)			

Ensure all storm, drain inlets and perimeter controls, runoff control BMPs and pollutants controls at entrances and exits are maintained and protected from activities the reduce their effectiveness (Risk Level 2 & 3 Only)			
Inspect all immediate access roads daily (Risk Level 2 & 3 Only)			
Run-On and Run-Off Controls			
Run-on to the site is effectively managed and directed away from all disturbed areas.			
Other			
Are the project SWPPP and BMP plan up to date, available on-site and being properly implemented?			

Part III. Descriptions of BMP Deficiencies

Deficiency	Repairs Implemented: Note - Repairs must begin within 72 hours of identification and, complete repairs as soon as possible.	
	Start Date	Action
1.		
2.		
3.		
4.		

Part IV. Additional Pre-Storm Observations. Note the presence or absence of floating and suspended materials, sheen, discoloration, turbidity, odors, and source(s) of pollutants(s).

	Yes, No, N/A
Do stormwater storage and containment areas have adequate freeboard? If no, complete Part III.	
Are drainage areas free of spills, leaks, or uncontrolled pollutant sources? If no, complete Part VII and describe below.	
Notes:	
Are stormwater storage and containment areas free of leaks? If no, complete Parts III and/or VII and describe below.	

Notes:	

Part V. Additional During Storm Observations. **If BMPs cannot be inspected during inclement weather, list the results of visual inspections at all relevant outfalls, discharge points, and downstream locations. Note odors or visible sheen on the surface of discharges. Complete Part VII (Corrective Actions) as needed.**	
Outfall, Discharge Point, or Other Downstream Location	
Location	Description
Location	Description
Location	Description
Location	Description
Location	Description
Location	Description
Location	Description
Location	Description

Part VI. Additional Post-Storm Observations. Visually observe (inspect) stormwater discharges at all discharge locations within two business days (48 hours) after each qualifying rain event, and observe (inspect) the discharge of stored or contained stormwater that is derived from and discharged subsequent to a qualifying rain event producing precipitation of ½ inch or more at the time of discharge. Complete Part VII (Corrective Actions) as needed.	
Discharge Location, Storage or Containment Area	**Visual Observation**

Part VII. Additional Corrective Actions Required. Identify additional corrective actions not included with BMP Deficiencies (Part III) above. Note if SWPPP change is required.	
Required Actions	**Implementation Date**

Appendix J: Project Specific Rain Event Action Plan Template

Not required for Risk Level 1 projects.

Rain Event Action Plan (REAP)

Date of REAP		**WDID Number:**	
Date Rain Predicted to Occur:		**Predicted % chance of rain:**	

Predicted Rain Event Triggered Actions

Below is a list of suggested actions and items to review for this project. Each active Trade should check all material storage areas, stockpiles, waste management areas, vehicle and equipment storage and maintenance, areas of active soil disturbance, and areas of active work to ensure the proper implementation of BMPs. Project-wide BMPs should be checked and cross-referenced to the BMP progress map.

Trade or Activity	Suggested action(s) to perform / item(s) to review prior to rain event
❑ Information & Scheduling	❑ Inform trade supervisors of predicted rain ❑ Check scheduled activities and reschedule as needed ❑ Alert erosion/sediment control provider ❑ Alert sample collection contractor (if applicable) ❑ Schedule staff for extended rain inspections ❑ Check Erosion and Sediment Control (ESC) material stock ❑ Review BMP progress map ❑ Other:_____ ❑ _____ ❑ _____
❑ Material storage areas	❑ Material under cover or in sheds (ex: treated woods and metals) ❑ Perimeter control around stockpiles ❑ Other:_____ ❑ _____ ❑ _____
❑ Waste management areas	❑ Dumpsters closed ❑ Drain holes plugged ❑ Recycling bins covered ❑ Sanitary stations bermed and protected from tipping ❑ Other:_____ ❑ _____ ❑ _____
❑ Trade operations	❑ Exterior operations shut down for event (e.g., no concrete pours or paving) ❑ Soil treatments (e.g., fertilizer) ceased within 24 hours of event ❑ Materials and equipment (e.g., tools) properly stored and covered ❑ Waste and debris disposed in covered dumpsters or removed from site ❑ Trenches and excavations protected ❑ Perimeter controls around disturbed areas ❑ Fueling and repair areas covered and bermed ❑ Other:_____ ❑ _____ ❑ _____
❑ Site ESC BMPs	❑ Adequate capacity in sediment basins and traps ❑ Site perimeter controls in place ❑ Catch basin and drop inlet protection in place and cleaned ❑ Temporary erosion controls deployed ❑ Temporary perimeter controls deployed around disturbed areas and stockpiles ❑ Roads swept; site ingress and egress points stabilized ❑ Other:_____ ❑ _____ ❑ _____
❑ Concrete rinse out area	❑ Adequate capacity for rain ❑ Wash-out bins covered ❑ Other:_____ ❑ _____ ❑ _____
❑ Spill and drips	❑ All incident spills and drips, including paint, stucco, fuel, and oil cleaned ❑ Drip pans emptied ❑ Other:_____ ❑ _____ ❑ _____

Continued on next page.

❑ Other / Discussion / Diagrams	❑ _____ ❑ _____ ❑ _____ ❑ _____ ❑ _____ ❑ _____ ❑ _____ ❑ _____ ❑ _____ ❑ _____ ❑ _____ ❑ _____ ❑ _____

Attach a printout of the weather forecast from the NOAA website to the REAP.

I certify under penalty of law that this Rain Event Action Plan (REAP) will be performed in accordance with the General Permit by me or under my direction or supervision in accordance with a system designed to assure that qualified personnel properly gathered and evaluated the information submitted. Based on my inquiry of the persons who manage the system, or those persons directly responsible for gathering the information, the information submitted is, to the best of my knowledge and belief, true, accurate, and complete. I am aware that there are significant penalties for submitting false information, including the possibility of fine and imprisonment for knowing violations.

_____ Date: _____

Qualified SWPPP Practitioner (Use ink please)

Appendix K: Training Reporting Form

Trained Contractor Personnel Log

Stormwater Management Training Log and Documentation

Project Name: TORRANCE TRANSIT PARK & RIDE REGIONAL TERMINAL
WDID #: _____

Stormwater Management Topic: (check as appropriate)

☐ Erosion Control
☐ Sediment Control
☐ Wind Erosion Control
☐ Tracking Control
☐ Non-Stormwater Management
☐ Waste Management and Materials Pollution Control
☐ Stormwater Sampling

Specific Training Objective: _____

Location: _____ Date: _____

Instructor:_____ Telephone: _____

Course Length (hours): _____

Attendee Roster (Attach additional forms if necessary)

Name	Company	Phone

As needed, add proof of external training (e.g., course completion certificates, credentials for QSP, QSD).

Appendix L: Responsible Parties

OPTIONAL

Authorization of Approved Signatories

Project Name: TORRANCE TRANSIT PARK & RIDE REGIONAL TERMINAL

WDID #: _____

Name of Personnel	Project Role	Company	Signature	Date

_____ _____

LRP's Signature Date

_____ _____

LRP Name and Title Telephone Number

Identification of QSP

Project Name: TORRANCE TRANSIT PARK & RIDE REGIONAL TERMINAL

WDID #: _____

The following are QSPs associated with this project

Name of Personnel(1)	Company	Date

(1) If additional QSPs are required on the job site add additional lines and include information here

Authorization of Data Submitters

Project Name: TORRANCE TRANSIT PARK & RIDE REGIONAL TERMINAL

WDID #: _____

Name of Personnel	Project Role	Company	Signature	Date

_____ _____

Approved Signatory's Signature Date

_____ _____

Approved Signatory Name and Title Telephone Number

Appendix M:Contractors and Subcontractors

Appendix N: Construction General Permit

INSTRUCTIONS

- *Include a copy of the General Permit, or reference permanent location of General Permit that is kept on the construction site.*

Linda S. Adams
Secretary for
Environmental Protection

State Water Resources Control Board

Division of Water Quality
1001 I Street • Sacramento, California 95814 • (916) 341-5455
Mailing Address: P.O. Box 100 • Sacramento, California • 95812-0100
Fax (916) 341-5463 • http://www.waterboards.ca.gov

Arnold Schwarzenegger
Governor

**NATIONAL POLLUTANT DISCHARGE ELIMINATION SYSTEM (NPDES)
GENERAL PERMIT FOR
STORM WATER DISCHARGES
ASSOCIATED WITH CONSTRUCTION AND LAND DISTURBANCE
ACTIVITIES**

**ORDER NO. 2010-0014-DWQ
NPDES NO. CAS000002**

Order No. 2009-0009-DWQ was adopted by the State Water Resources Control Board on:	**September 2, 2009**
Order No. 2009-0009-DWQ became effective on:	**July 1, 2010**
Order No. 2009-0009-DWQ shall expire on:	**September 2, 2014**
This Order, which amends Order No. 2009-0009-DWQ, was adopted by the State Water Resources Control Board on:	**November 16, 2010**
This Order shall become effective on:	**February 14, 2011**

IT IS HEREBY ORDERED that this Order amends Order No. 2009-0009-DWQ. Additions to Order No. 2009-0009-DWQ are reflected in blue-underline text and deletions are reflected in red-strikeout text.

IT IS FURTHER ORDERED that staff are directed to prepare and post a conformed copy of Order No. 2009-0009-DWQ incorporating the revisions made by this Order.

I, Jeanine Townsend, Clerk to the Board, do hereby certify that this Order with all attachments is a full, true, and correct copy of an Order adopted by the State Water Resources Control Board, on **November 16, 2010.**

AYE: Chairman Charles R. Hoppin
Vice Chair Frances Spivy-Weber
Board Member Arthur G. Baggett, Jr.
Board Member Tam M. Doduc
NAY: None
ABSENT: None
ABSTAIN: None

Jeanine Townsend
Jeanine Townsend
Clerk to the Board

Fact Sheet pages 11-12 Obtaining and Terminating Permit Coverage

The appropriate Legally Responsible Person (LRP) must obtain coverage under this General Permit~~, except in two limited circumstances. First, where the construction of pipelines, utility lines, fiber-optic cables, or other linear underground/overhead projects will occur across several properties, the utility company, municipality, or other public or private company or agency that owns or operates the linear underground/overhead project is responsible for obtaining coverage under the General Permit. Second, where there is a lease of a mineral estate (oil, gas, geothermal, aggregate, precious metals, and/or industrial metals), the lessee is responsible for obtaining coverage under the General Permit.~~ To obtain coverage, the LRP or the LRP's Approved Signatory ~~or other entity described above~~ must file Permit Registration Documents (PRDs) prior to the commencement of construction activity. Failure to obtain coverage under this General Permit for storm water discharges to waters of the United States is a violation of the CWA and the California Water Code.

Section II(A)(2) Conditions for Permit Coverage, page 14

2. The ~~utility company, municipality, or other public or private company or agency that owns or operates the linear underground/overhead project~~ Legally Responsible Person is responsible for obtaining coverage under the General Permit where the construction of pipelines, utility lines, fiber-optic cables, or other linear underground/overhead projects will occur across several properties unless the LUP construction activities are covered under another construction storm water permit.

Section II(C)(4) Conditions for Permit Coverage, page 18

4. When an LRP with active General Permit coverage transfers its LRP status to another person or entity that qualifies as an LRP, the existing LRP shall inform the new LRP of the General Permit's requirements. ~~When an LRP owns property with active General Permit coverage, and the LRP sells the property, or a parcel thereof, to another person, that person shall become an LRP with respect to whatever parcel was sold. The existing LRP shall inform the new LRP of the General Permit's requirements.~~ In order for the new LRP to continue the construction activity on its parcel of property, the new LRP, or the new LRP's approved signatory, must submit PRDs in accordance with this General Permit's requirements.

Section IV(I) – Special Provisions pages 24-25

I. Electronic Signature and Certification Requirements

1. All Permit Registration Documents (PRDs) and Notices of Terminatione (NOTs) shall be electronically signed, certified, and submitted via SMARTS to the State Water Board. Either the Legally Responsible Person (LRP), as defined in Appendix 5 – Glossary, or a person legally authorized to sign and certify PRDs and NOTs on behalf of the LRP (the LRP's Approved Signatory, as defined in Appendix 5 - Glossary) must submit all information electronically via SMARTS.

~~a. The LRP's Approved Signatory must be one of the following:~~

~~i. For a corporation: a responsible corporate officer. For the purpose of this section, a responsible corporate officer means: (a) a president, secretary, treasurer, or vice-president of the corporation in charge of a principal business function, or any other person who performs similar policy or decision-making functions for the corporation; or (b) the manager of the facility if authority to sign documents has been assigned or delegated to the manager in accordance with corporate procedures;~~

~~ii. For a partnership or sole proprietorship: a general partner or the proprietor, respectively;~~

~~iii. For a municipality, State, Federal, or other public agency: either a principal executive officer or ranking elected official. The principal executive officer of a Federal agency includes the chief executive officer of the agency or the senior executive officer having responsibility for the overall operations of a principal geographic unit of the agency (e.g., Regional Administrators of U.S. EPA);~~

~~iv. For the military: Any military officer who has been designated.~~

~~v. For a public university: An authorized university official~~

~~b.~~ 2. Changes to Authorization. If an ~~a~~Approved ~~s~~Signatory's authorization is no longer accurate, a new authorization satisfying the requirements of paragraph (a) of this section must be submitted via SMARTS prior to or together with any reports, information or applications to be signed by an ~~a~~Approved ~~s~~Signatory.

~~2.~~ 3. All Annual Reports, or other information required by the General Permit (other than PRDs and NOTs) or requested by the Regional Water Board, State Water Board, U.S. EPA, or local storm water management agency shall be certified and submitted by the LRP or the LRP's ~~a~~Approved ~~s~~Signatory ~~as described above~~.

Attachment A, Section E(9) - Special Provisions pages 10-11

8. Electronic Signature and Certification Requirements

a. All Permit Registration Documents (PRDs) and Notices of Termination (NOTs) shall be electronically signed, certified, and submitted via SMARTS to the State Water Board. Either the Legally Responsible Person (LRP), as defined in Appendix 5-Glossary, or a person legally authorized to sign and certify PRDs and NOTs on behalf of the LRP (the LRP's Approved Signatory, as defined in Appendix 5-Glossary) must submit all information electronically via SMARTS. ~~For Linear Underground/Overhead projects, the Legally Responsible Person is the person in charge of the utility company, municipality, or other public or private company or agency that owns or operates the LUP. The LRP's Approved Signatory must be one of the following:~~

~~i For a corporation: a responsible corporate officer. For the purpose of this section, a responsible corporate officer means:~~

~~(1) a president, secretary, treasurer, or vice-president of the corporation in charge of a principal business function, or any other person who performs similar policy or decision-making functions for the corporation; or~~

~~(2) the manager of the facility if authority to sign documents has been assigned or delegated to the manager in accordance with corporate procedures;~~

~~ii For a partnership or sole proprietorship: a general partner or the proprietor, respectively; or~~

~~iii For a municipality, State, Federal, or other public agency: either a principal executive officer or ranking elected official. The principal executive officer of a Federal agency includes the chief executive officer of the agency or the senior executive officer having responsibility for the overall operations of a principal geographic unit of the agency (e.g., Regional Administrators of U.S. EPA).~~

b. Changes to Authorization. If an ~~a~~Approved ~~s~~Signatory's authorization is no longer accurate, a new authorization satisfying the requirements of paragraph (a) of this section must be submitted via SMARTS prior to or together with any reports, information or applications to be signed by an ~~a~~Approved ~~s~~Signatory.

c. All SWPPP revisions, annual reports, or other information required by the General Permit (other than PRDs and NOTs) or requested by the Regional Water Board, State Water Board, USEPA, or local storm water management agency shall be certified and submitted by the LRP or the LRP's ~~a~~Approved ~~s~~Signatory ~~as described above~~.

Appendix 5 – Glossary

Approved Signatory
A person who has been authorized by the Legally Responsible Person ~~legal authority~~ to sign, certify, and electronically submit Permit Registration Documents, ~~and~~ Notices of Termination ~~on behalf of the Legally Responsible Person~~, and any other documents, reports, or information required by the General Permit, the State or Regional Water Board, or U.S. EPA. The Approved Signatory must be one of the following:

1. For a corporation or limited liability company: a responsible corporate officer. For the purpose of this section, a responsible corporate officer means: (a) a president, secretary, treasurer, or vice-president of the corporation in charge of a principal business function, or any other person who performs similar policy or decision-making functions for the corporation or limited liability company; or (b) the manager of the facility if authority to sign documents has been assigned or delegated to the manager in accordance with corporate procedures;

2. For a partnership or sole proprietorship: a general partner or the proprietor, respectively;

3. For a municipality, State, Federal, or other public agency: a principal executive officer, ranking elected official, city manager, council president, or any other authorized public employee with managerial responsibility over the construction or land disturbance project (including, but not limited to, project manager, project superintendent, or resident engineer);

4. For the military: any military officer or Department of Defense civilian, acting in an equivalent capacity to a military officer, who has been designated;

5. For a public university: an authorized university official;

6. For an individual: the individual, because the individual acts as both the Legally Responsible Person and the Approved Signatory; or

7. For any type of entity not listed above (e.g. trusts, estates, receivers): an authorized person with managerial authority over the construction or land disturbance project.

Legally Responsible Person
The Legally Responsible Person (LRP) will typically be the project proponent. The categories of persons or entities that are eligible to serve as the LRP are set forth below. For any construction or land disturbance project where multiple persons or entities are eligible to serve as the LRP, those persons or entities shall select a single LRP. In exceptional circumstances, a person or entity that qualifies as the LRP may provide written authorization to another person or entity to serve as the LRP. In such a circumstance, the person or entity that provides the authorization retains all responsibility for compliance with the General Permit. Except as provided in category 2(d), a contractor who does not satisfy the requirements of any of the categories below is not qualified to be an LRP.

The following persons or entities may serve as a LRP:

1. ~~The~~ A person, company, agency, or other entity that possesses a real property interest (including, but not limited to, fee simple ownership, easement, leasehold, or other rights of way) in the land ~~who possesses the title of the land or the leasehold interest of a mineral estate~~ upon which the construction or land disturbance activities will occur for the regulated site. ~~For linear underground/overhead projects, it is in the person in charge of the utility company, municipality, or other public or private company or agency that owns or operates the LUP.~~

2. In addition to the above, the following persons or entities may also serve as an LRP:

   a. For linear underground/overhead projects, the utility company, municipality, or other public or private company or agency that owns or operates the LUP;

   b. For land controlled by an estate or similar entity, the person who has day-to-day control over the land (including, but not limited to, a bankruptcy trustee, receiver, or conservator);

   c. For pollution investigation and remediation projects, any potentially responsible party that has received permission to conduct the project from the holder of a real property interest in the land; or

   d. For U.S. Army Corp of Engineers projects, the U.S. Army Corps of Engineers may provide written authorization to its bonded contractor to serve as the LRP, provided, however, that the U.S. Army Corps of Engineers is also responsible for compliance with the general permit, as authorized by the Clean Water Act or the Federal Facilities Compliance Act.

Linda S. Adams
Secretary for
Environmental Protection

State Water Resources Control Board

Division of Water Quality
1001 I Street • Sacramento, California 95814 • (916) 341-5455
Mailing Address: P.O. Box 100 • Sacramento, California • 95812-0100
Fax (916) 341-5463 • http://www.waterboards.ca.gov

Arnold Schwarzenegger
Governor

NATIONAL POLLUTANT DISCHARGE ELIMINATION SYSTEM (NPDES)
GENERAL PERMIT FOR
STORM WATER DISCHARGES
ASSOCIATED WITH CONSTRUCTION AND LAND DISTURBANCE
ACTIVITIES

ORDER NO. 2009-0009-DWQ
NPDES NO. **CAS000002**

This Order was adopted by the State Water Resources Control Board on:	**September 2, 2009**
This Order shall become effective on:	**July 1, 2010**
This Order shall expire on:	**September 2, 2014**

IT IS HEREBY ORDERED, that this Order supersedes Order No. 99-08-DWQ except for enforcement purposes. The Discharger shall comply with the requirements in this Order to meet the provisions contained in Division 7 of the California Water Code (commencing with section 13000) and regulations adopted thereunder, and the provisions of the federal Clean Water Act and regulations and guidelines adopted thereunder.

I, Jeanine Townsend, Clerk to the Board, do hereby certify that this Order with all attachments is a full, true, and correct copy of an Order adopted by the State Water Resources Control Board, on September 2, 2009.

AYE: Vice Chair Frances Spivy-Weber
Board Member Arthur G. Baggett, Jr.
Board Member Tam M. Doduc

NAY: Chairman Charles R. Hoppin

ABSENT: None

ABSTAIN: None

Jeanine Townsend
Jeanine Townsend
Clerk to the Board

TABLE OF CONTENTS

I. FINDINGS 1
II. CONDITIONS FOR PERMIT COVERAGE 14
III. DISCHARGE PROHIBITIONS 20
IV. SPECIAL PROVISIONS 22
V. EFFLUENT STANDARDS 29
VI. RECEIVING WATER LIMITATIONS 32
VII. TRAINING QUALIFICATIONS AND CERTIFICATION REQUIREMENTS 33
VIII. RISK DETERMINATION 34
IX. RISK LEVEL 1 REQUIREMENTS 35
X. RISK LEVEL 2 REQUIREMENTS 35
XI. RISK LEVEL 3 REQUIREMENTS 35
XII. ACTIVE TREATMENT SYSTEMS (ATS) 35
XIII. POST-CONSTRUCTION STANDARDS 36
XIV. SWPPP REQUIREMENTS 38
XV. REGIONAL WATER BOARD AUTHORITIES 39
XVI. ANNUAL REPORTING REQUIREMENTS 40

LIST OF ATTACHMENTS

Attachment A – Linear Underground/Overhead Requirements
Attachment A.1 – LUP Type Determination
Attachment A.2 – LUP Permit Registration Documents
Attachment B – Permit Registration Documents
Attachment C – Risk Level 1 Requirements
Attachment D – Risk Level 2 Requirements
Attachment E – Risk Level 3 Requirements
Attachment F – Active Treatment System (ATS) Requirements

LIST OF APPENDICES

Appendix 1 – Risk Determination Worksheet
Appendix 2 – Post-Construction Water Balance Performance Standard
Appendix 2.1 – Post-Construction Water Balance Performance Standard Spreadsheet
Appendix 3 – Bioassessment Monitoring Guidelines
Appendix 4 – Adopted/Implemented Sediment TMDLs
Appendix 5 – Glossary
Appendix 6 – Acronyms
Appendix 7 – State and Regional Water Resources Control Board Contacts

STATE WATER RESOURCES CONTROL BOARD
ORDER NO. 2009-0009-DWQ
NATIONAL POLLUTANT DISCHARGE ELIMINATION SYSTEM
GENERAL PERMIT NO. CAS000002

WASTE DISCHARGE REQUIREMENTS
FOR
DISCHARGES OF STORM WATER RUNOFF ASSOCIATED WITH CONSTRUCTION AND LAND DISTURBANCE ACTIVITIES

I. FINDINGS

A. General Findings

The State Water Resources Control Board (State Water Board) finds that:

1. The federal Clean Water Act (CWA) prohibits certain discharges of storm water containing pollutants except in compliance with a National Pollutant Discharge Elimination System (NPDES) permit (Title 33 United States Code (U.S.C.) §§ 1311 and 1342(p); also referred to as Clean Water Act (CWA) §§ 301 and 402(p)). The U.S. Environmental Protection Agency (U.S. EPA) promulgates federal regulations to implement the CWA's mandate to control pollutants in storm water runoff discharges. (Title 40 Code of Federal Regulations (C.F.R.) Parts 122, 123, and 124). The federal statutes and regulations require discharges to surface waters comprised of storm water associated with construction activity, including demolition, clearing, grading, and excavation, and other land disturbance activities (except operations that result in disturbance of less than one acre of total land area and which are not part of a larger common plan of development or sale), to obtain coverage under an NPDES permit. The NPDES permit must require implementation of Best Available Technology Economically Achievable (BAT) and Best Conventional Pollutant Control Technology (BCT) to reduce or eliminate pollutants in storm water runoff. The NPDES permit must also include additional requirements necessary to implement applicable water quality standards.

2. This General Permit authorizes discharges of storm water associated with construction activity so long as the dischargers comply with all requirements, provisions, limitations and prohibitions in the permit. In addition, this General Permit regulates the discharges of storm water associated with construction activities from all Linear Underground/Overhead Projects resulting in the disturbance of greater than or equal to one acre (Attachment A).

3. This General Permit regulates discharges of pollutants in storm water associated with construction activity (storm water discharges) to waters of the United States from construction sites that disturb one or more acres of land surface, or that are part of a common plan of development or sale that disturbs more than one acre of land surface.

4. This General Permit does not preempt or supersede the authority of local storm water management agencies to prohibit, restrict, or control storm water discharges to municipal separate storm sewer systems or other watercourses within their jurisdictions.

5. This action to adopt a general NPDES permit is exempt from the provisions of Chapter 3 of the California Environmental Quality Act (CEQA) (Public Resources Code Section 21100, et seq.), pursuant to Section 13389 of the California Water Code.

6. Pursuant to 40 C.F.R. § 131.12 and State Water Board Resolution No. 68-16,[1] which incorporates the requirements of § 131.12 where applicable, the State Water Board finds that discharges in compliance with this General Permit will not result in the lowering of water quality standards, and are therefore consistent with those provisions. Compliance with this General Permit will result in improvements in water quality.

7. This General Permit serves as an NPDES permit in compliance with CWA § 402 and will take effect on July 1, 2010 by the State Water Board provided the Regional Administrator of the U.S. EPA has no objection. If the U.S. EPA Regional Administrator objects to its issuance, the General Permit will not become effective until such objection is withdrawn.

8. Following adoption and upon the effective date of this General Permit, the Regional Water Quality Control Boards (Regional Water Boards) shall enforce the provisions herein.

9. Regional Water Boards establish water quality standards in Basin Plans. The State Water Board establishes water quality standards in various statewide plans, including the California Ocean Plan. U.S. EPA establishes water quality standards in the National Toxic Rule (NTR) and the California Toxic Rule (CTR).

[1] Resolution No. 68-16 generally requires that existing water quality be maintained unless degradation is justified based on specific findings.

10. This General Permit does not authorize discharges of fill or dredged material regulated by the U.S. Army Corps of Engineers under CWA § 404 and does not constitute a waiver of water quality certification under CWA § 401.

11. The primary storm water pollutant at construction sites is excess sediment. Excess sediment can cloud the water, which reduces the amount of sunlight reaching aquatic plants, clog fish gills, smother aquatic habitat and spawning areas, and impede navigation in our waterways. Sediment also transports other pollutants such as nutrients, metals, and oils and greases.

12. Construction activities can impact a construction site's runoff sediment supply and transport characteristics. These modifications, which can occur both during and after the construction phase, are a significant cause of degradation of the beneficial uses established for water bodies in California. Dischargers can avoid these effects through better construction site design and activity practices.

13. This General Permit recognizes four distinct phases of construction activities. The phases are Grading and Land Development Phase, Streets and Utilities Phase, Vertical Construction Phase, and Final Landscaping and Site Stabilization Phase. Each phase has activities that can result in different water quality effects from different water quality pollutants. This General Permit also recognizes inactive construction as a category of construction site type.

14. Compliance with any specific limits or requirements contained in this General Permit does not constitute compliance with any other applicable requirements.

15. Following public notice in accordance with State and Federal laws and regulations, the State Water Board heard and considered all comments and testimony in a public hearing on 06/03/2009. The State Water Board has prepared written responses to all significant comments.

16. Construction activities obtaining coverage under the General Permit may have multiple discharges subject to requirements that are specific to general, linear, and/or active treatment system discharge types.

17. The State Water Board may reopen the permit if the U.S. EPA adopts a final effluent limitation guideline for construction activities.

B. Activities Covered Under the General Permit

18. Any construction or demolition activity, including, but not limited to, clearing, grading, grubbing, or excavation, or any other activity that results in a land disturbance of equal to or greater than one acre.

19. Construction activity that results in land surface disturbances of less than one acre if the construction activity is part of a larger common plan of development or the sale of one or more acres of disturbed land surface.

20. Construction activity related to residential, commercial, or industrial development on lands currently used for agriculture including, but not limited to, the construction of buildings related to agriculture that are considered industrial pursuant to U.S. EPA regulations, such as dairy barns or food processing facilities.

21. Construction activity associated with Linear Underground/Overhead Utility Projects (LUPs) including, but not limited to, those activities necessary for the installation of underground and overhead linear facilities (e.g., conduits, substructures, pipelines, towers, poles, cables, wires, connectors, switching, regulating and transforming equipment and associated ancillary facilities) and include, but are not limited to, underground utility mark-out, potholing, concrete and asphalt cutting and removal, trenching, excavation, boring and drilling, access road and pole/tower pad and cable/wire pull station, substation construction, substructure installation, construction of tower footings and/or foundations, pole and tower installations, pipeline installations, welding, concrete and/or pavement repair or replacement, and stockpile/borrow locations.

22. Discharges of sediment from construction activities associated with oil and gas exploration, production, processing, or treatment operations or transmission facilities.[2]

23. Storm water discharges from dredge spoil placement that occur outside of U.S. Army Corps of Engineers jurisdiction (upland sites) and that disturb one or more acres of land surface from construction activity are covered by this General Permit. Construction sites that intend to disturb one or more acres of land within the jurisdictional boundaries of a CWA § 404 permit should contact the appropriate Regional Water Board to determine whether this permit applies to the site.

[2] Pursuant to the Ninth Circuit Court of Appeals' decision in *NRDC v. EPA* (9th Cir. 2008) 526 F.3d 591, and subsequent denial of the U.S. EPA's petition for reconsideration in November 2008, oil and gas construction activities discharging storm water contaminated only with sediment are no longer exempt from the NPDES program.

C. Activities Not Covered Under the General Permit

24. Routine maintenance to maintain original line and grade, hydraulic capacity, or original purpose of the facility.

25. Disturbances to land surfaces solely related to agricultural operations such as disking, harrowing, terracing and leveling, and soil preparation.

26. Discharges of storm water from areas on tribal lands; construction on tribal lands is regulated by a federal permit.

27. Construction activity and land disturbance involving discharges of storm water within the Lake Tahoe Hydrologic Unit. The Lahontan Regional Water Board has adopted its own permit to regulate storm water discharges from construction activity in the Lake Tahoe Hydrologic Unit (Regional Water Board 6SLT). Owners of construction sites in this watershed must apply for the Lahontan Regional Water Board permit rather than the statewide Construction General Permit.

28. Construction activity that disturbs less than one acre of land surface, and that is not part of a larger common plan of development or the sale of one or more acres of disturbed land surface.

29. Construction activity covered by an individual NPDES Permit for storm water discharges.

30. Discharges from small (1 to 5 acre) construction activities with an approved Rainfall Erosivity Waiver authorized by U.S. EPA Phase II regulations certifying to the State Board that small construction activity will occur only when the Rainfall Erosivity Factor is less than 5 ("R" in the Revised Universal Soil Loss Equation).

31. Landfill construction activity that is subject to the Industrial General Permit.

32. Construction activity that discharges to Combined Sewer Systems.

33. Conveyances that discharge storm water runoff combined with municipal sewage.

34. Discharges of storm water identified in CWA § 402(*l*)(2), 33 U.S.C. § 1342(*l*)(2).

35. Discharges occurring in basins that are not tributary or hydrologically connected to waters of the United States (for more information contact your Regional Water Board).

D. Obtaining and Modifying General Permit Coverage

36. This General Permit requires all dischargers to electronically file all Permit Registration Documents (PRDs), Notices of Termination (NOT), changes of information, annual reporting, and other compliance documents required by this General Permit through the State Water Board's Storm water Multi-Application and Report Tracking System (SMARTS) website.

37. Any information provided to the Regional Water Board shall comply with the Homeland Security Act and any other federal law that concerns security in the United States; any information that does not comply should not be submitted.

38. This General Permit grants an exception from the Risk Determination requirements for existing sites covered under Water Quality Orders No. 99-08-DWQ, and No. 2003-0007-DWQ. For certain sites, adding additional requirements may not be cost effective. Construction sites covered under Water Quality Order No. 99-08-DWQ shall obtain permit coverage at the Risk Level 1. LUPs covered under Water Quality Order No. 2003-0007-DWQ shall obtain permit coverage as a Type 1 LUP. The Regional Water Boards have the authority to require Risk Determination to be performed on sites currently covered under Water Quality Orders No. 99-08-DWQ and No. 2003-0007-DWQ where they deem it necessary. The State Water Board finds that there are two circumstances when it may be appropriate for the Regional Water Boards to require a discharger that had filed an NOI under State Water Board Order No. 99-08-DWQ to recalculate the site's risk level. These circumstances are: (1) when the discharger has a demonstrated history of noncompliance with State Water Board Order No. 99-08-DWQ or; (2) when the discharger's site poses a significant risk of causing or contributing to an exceedance of a water quality standard without the implementation of the additional Risk Level 2 or 3 requirements.

E. Prohibitions

39. All discharges are prohibited except for the storm water and non-storm water discharges specifically authorized by this General Permit or another NPDES permit. Non-storm water discharges include a wide variety of sources, including improper dumping, spills, or leakage from storage tanks or transfer areas. Non-storm water discharges may

contribute significant pollutant loads to receiving waters. Measures to control spills, leakage, and dumping, and to prevent illicit connections during construction must be addressed through structural as well as non-structural Best Management Practices (BMPs)[3]. The State Water Board recognizes, however, that certain non-storm water discharges may be necessary for the completion of construction.

40. This General Permit prohibits all discharges which contain a hazardous substance in excess of reportable quantities established in 40 C.F.R. §§ 117.3 and 302.4, unless a separate NPDES Permit has been issued to regulate those discharges.

41. This General Permit incorporates discharge prohibitions contained in water quality control plans, as implemented by the State Water Board and the nine Regional Water Boards.

42. Pursuant to the Ocean Plan, discharges to Areas of Special Biological Significance (ASBS) are prohibited unless covered by an exception that the State Water Board has approved.

43. This General Permit prohibits the discharge of any debris[4] from construction sites. Plastic and other trash materials can cause negative impacts to receiving water beneficial uses. The State Water Board encourages the use of more environmentally safe, biodegradable materials on construction sites to minimize the potential risk to water quality.

F. Training

44. In order to improve compliance with and to maintain consistent enforcement of this General Permit, all dischargers are required to appoint two positions - the Qualified SWPPP Developer (QSD) and the Qualified SWPPP Practitioner (QSP) - who must obtain appropriate training. Together with the key stakeholders, the State and Regional Water Boards are leading the development of this curriculum through a collaborative organization called The Construction General Permit (CGP) Training Team.

45. The Professional Engineers Act (Bus. & Prof. Code section 6700, et seq.) requires that all engineering work must be performed by a California licensed engineer.

[3] BMPs are scheduling of activities, prohibitions of practices, maintenance procedures, and other management practices to prevent or reduce the discharge of pollutants to waters of the United States. BMPs also include treatment requirements, operating procedures, and practice to control site runoff, spillage or leaks, sludge or waste disposal, or drainage from raw material storage.

[4] Litter, rubble, discarded refuse, and remains of destroyed inorganic anthropogenic waste.

G. Determining and Reducing Risk

46. The risk of accelerated erosion and sedimentation from wind and water depends on a number of factors, including proximity to receiving water bodies, climate, topography, and soil type.

47. This General Permit requires dischargers to assess the risk level of a site based on both sediment transport and receiving water risk. This General Permit contains requirements for Risk Levels 1, 2 and 3, and LUP Risk Type 1, 2, and 3 (Attachment A). Risk levels are established by determining two factors: first, calculating the site's sediment risk; and second, receiving water risk during periods of soil exposure (i.e. grading and site stabilization). Both factors are used to determine the site-specific Risk Level(s). LUPs can be determined to be Type 1 based on the flowchart in Attachment A.1.

48. Although this General Permit does not mandate specific setback distances, dischargers are encouraged to set back their construction activities from streams and wetlands whenever feasible to reduce the risk of impacting water quality (e.g., natural stream stability and habitat function). Because there is a reduced risk to receiving waters when setbacks are used, this General Permit gives credit to setbacks in the risk determination and post-construction storm water performance standards. The risk calculation and runoff reduction mechanisms in this General Permit are expected to facilitate compliance with any Regional Water Board and local agency setback requirements, and to encourage voluntary setbacks wherever practicable.

49. Rain events can occur at any time of the year in California. Therefore, a Rain Event Action Plan (REAP) is necessary for Risk Level 2 and 3 traditional construction projects (LUPs exempt) to ensure that active construction sites have adequate erosion and sediment controls implemented prior to the onset of a storm event, even if construction is planned only during the dry season.

50. Soil particles smaller than 0.02 millimeters (mm) (i.e., finer than medium silt) do not settle easily using conventional measures for sediment control (i.e., sediment basins). Given their long settling time, dislodging these soils results in a significant risk that fine particles will be released into surface waters and cause unacceptable downstream impacts. If operated correctly, an Active Treatment System (ATS[5]) can prevent or reduce the release of fine particles from construction sites.

[5] An ATS is a treatment system that employs chemical coagulation, chemical flocculation, or electro coagulation in order to reduce turbidity caused by fine suspended sediment.

Use of an ATS can effectively reduce a site's risk of impacting receiving waters.

51. Dischargers located in a watershed area where a Total Maximum Daily Load (TMDL) has been adopted or approved by the Regional Water Board or U.S. EPA may be required by a separate Regional Water Board action to implement additional BMPs, conduct additional monitoring activities, and/or comply with an applicable waste load allocation and implementation schedule. Such dischargers may also be required to obtain an individual Regional Water Board permit specific to the area.

H. Effluent Standards

52. The State Water Board convened a blue ribbon panel of storm water experts that submitted a report entitled, "The Feasibility of Numeric Effluent Limits Applicable to Discharges of Storm Water Associated with Municipal, Industrial and Construction Activities," dated June 19, 2006. The panel concluded that numeric limits or action levels are technically feasible to control construction storm water discharges, provided that certain conditions are considered. The panel also concluded that numeric effluent limitations (NELs) are feasible for discharges from construction sites that utilize an ATS. The State Water Board has incorporated the expert panel's suggestions into this General Permit, which includes both numeric action levels (NALs) and NELs for pH and turbidity, and special numeric limits for ATS discharges.

Numeric Effluent Limitations

53. Discharges of storm water from construction activities may become contaminated from alkaline construction materials resulting in high pH (greater than pH 7). Alkaline construction materials include, but are not limited to, hydrated lime, concrete, mortar, cement kiln dust (CKD), Portland cement treated base (CTB), fly ash, recycled concrete, and masonry work. This General Permit includes an NEL for pH (6.0-9.0) that applies only at sites that exhibit a "high risk of high pH discharge." A "high risk of high pH discharge" can occur during the complete utilities phase, the complete vertical build phase, and any portion of any phase where significant amounts of materials are placed directly on the land at the site in a manner that could result in significant alterations to the background pH of any discharges.

54. For Risk Level 3 discharges, this General Permit establishes technology-based, numeric effluent limitations (NELs) for turbidity of 500 NTU. Exceedances of the turbidity NEL constitutes a violation of this General Permit.

55. This General Permit establishes a 5 year, 24 hour (expressed in inches of rainfall) Compliance Storm Event exemption from the technology-based NELs for Risk Level 3 dischargers.

Determining Compliance with Numeric Limitations

56. This General Permit sets a pH NAL of 6.5 to 8.5, and a turbidity NAL of 250 NTU. The purpose of the NAL and its associated monitoring requirement is to provide operational information regarding the performance of the measures used at the site to minimize the discharge of pollutants and to protect beneficial uses and receiving waters from the adverse effects of construction-related storm water discharges. The NALs in this General Permit for pH and turbidity are not directly enforceable and do not constitute NELs.

57. This General Permit requires dischargers with NAL exceedances to immediately implement additional BMPs and revise their Storm Water Pollution Prevention Plans (SWPPPs) accordingly to either prevent pollutants and authorized non-storm water discharges from contaminating storm water, or to substantially reduce the pollutants to levels consistently below the NALs. NAL exceedances are reported in the State Water Boards SMARTS system, and the discharger is required to provide an NAL Exceedance Report when requested by a Regional Water Board.

58. If run-on is caused by a forest fire or any other natural disaster, then NELs do not apply.

59. Exceedances of the NELs are a violation of this Permit. This General Permit requires dischargers with NEL exceedances to implement additional monitoring, BMPs, and revise their SWPPPs accordingly. Dischargers are required to notify the State and Regional Water Boards of the violation through the State Water Boards SMARTs system, and provide an NEL Violation Report sharing additional information concerning the NEL exceedance.

I. Receiving Water Limitations

60. This General Permit requires all enrolled dischargers to determine the receiving waters potentially affected by their discharges and to comply with all applicable water quality standards, including any more stringent standards applicable to a water body.

J. Sampling, Monitoring, Reporting and Record Keeping

61. Visual monitoring of storm water and non-storm water discharges is required for all sites subject to this General Permit.

62. Records of all visual monitoring inspections are required to remain on-site during the construction period and for a minimum of three years.

63. For all Risk Level 3 and Risk Level 2 sites, this General Permit requires effluent monitoring for pH and turbidity. Sampling, analysis and monitoring requirements for effluent monitoring for pH and turbidity are contained in this General Permit.

64. Risk Level 3 sites in violation of the Numeric Effluent Limitations contained in this General Permit and with direct discharges to receiving water are required to conduct receiving water monitoring.

65. For Risk Level 3 sites larger than 30 acres and with direct discharges to receiving waters, this General Permit requires bioassessment sampling before and after site completion to determine if significant degradation to the receiving water's biota has occurred. Bioassessment sampling guidelines are contained in this General Permit.

66. A summary and evaluation of the sampling and analysis results will be submitted in the Annual Reports.

67. This General Permit contains sampling, analysis and monitoring requirements for non-visible pollutants at all sites subject to this General Permit.

68. Compliance with the General Permit relies upon dischargers to electronically self-report any discharge violations and to comply with any Regional Water Board enforcement actions.

69. This General Permit requires that all dischargers maintain a paper or electronic copy of all required records for three years from the date generated or date submitted, whichever is last. These records must be available at the construction site until construction is completed. For LUPs, these documents may be retained in a crew member's vehicle and made available upon request.

K. Active Treatment System (ATS) Requirements

70. Active treatment systems add chemicals to facilitate flocculation, coagulation and filtration of suspended sediment particles. The uncontrolled release of these chemicals to the environment can negatively affect the beneficial uses of receiving waters and/or degrade water quality (e.g., acute and chronic toxicity). Additionally, the batch storage and treatment of storm water through an ATS' can potentially

cause physical impacts on receiving waters if storage volume is inadequate or due to sudden releases of the ATS batches and improperly designed outfalls.

71. If designed, operated and maintained properly an ATS can achieve very high removal rates of suspended sediment (measured as turbidity), albeit at sometimes significantly higher costs than traditional erosion/sediment control practices. As a result, this General Permit establishes NELs consistent with the expected level of typical ATS performance.

72. This General Permit requires discharges of storm water associated with construction activity that undergo active treatment to comply with special operational and effluent limitations to ensure that these discharges do not adversely affect the beneficial uses of the receiving waters or cause degradation of their water quality.

73. For ATS discharges, this General Permit establishes technology-based NELs for turbidity.

74. This General Permit establishes a 10 year, 24 hour (expressed in inches of rainfall) Compliance Storm Event exemption from the technology-based numeric effluent limitations for ATS discharges. Exceedances of the ATS turbidity NEL constitutes a violation of this General Permit.

L. Post-Construction Requirements

75. This General Permit includes performance standards for post-construction that are consistent with State Water Board Resolution No. 2005-0006, "Resolution Adopting the Concept of Sustainability as a Core Value for State Water Board Programs and Directing Its Incorporation," and 2008-0030, "Requiring Sustainable Water Resources Management." The requirement for all construction sites to match pre-project hydrology will help ensure that the physical and biological integrity of aquatic ecosystems are sustained. This "runoff reduction" approach is analogous in principle to Low Impact Development (LID) and will serve to protect related watersheds and waterbodies from both hydrologic-based and pollution impacts associated with the post-construction landscape.

76. LUP projects are not subject to post-construction requirements due to the nature of their construction to return project sites to pre-construction conditions.

M. Storm Water Pollution Prevention Plan Requirements

77. This General Permit requires the development of a site-specific SWPPP. The SWPPP must include the information needed to demonstrate compliance with all requirements of this General Permit, and must be kept on the construction site and be available for review. The discharger shall ensure that a QSD develops the SWPPP.

78. To ensure proper site oversight, this General Permit requires a Qualified SWPPP Practitioner to oversee implementation of the BMPs required to comply with this General Permit.

N. Regional Water Board Authorities

79. Regional Water Boards are responsible for implementation and enforcement of this General Permit. A general approach to permitting is not always suitable for every construction site and environmental circumstances. Therefore, this General Permit recognizes that Regional Water Boards must have some flexibility and authority to alter, approve, exempt, or rescind permit authority granted under this General Permit in order to protect the beneficial uses of our receiving waters and prevent degradation of water quality.

IT IS HEREBY ORDERED that all dischargers subject to this General Permit shall comply with the following conditions and requirements (including all conditions and requirements as set forth in Attachments A, B, C, D, E and F)[8]:

II. CONDITIONS FOR PERMIT COVERAGE

A. Linear Underground/Overhead Projects (LUPs)

1. Linear Underground/Overhead Projects (LUPs) include, but are not limited to, any conveyance, pipe, or pipeline for the transportation of any gaseous, liquid (including water and wastewater for domestic municipal services), liquescent, or slurry substance; any cable line or wire for the transmission of electrical energy; any cable line or wire for communications (e.g. telephone, telegraph, radio or television messages); and associated ancillary facilities. Construction activities associated with LUPs include, but are not limited to, (a) those activities necessary for the installation of underground and overhead linear facilities (e.g., conduits, substructures, pipelines, towers, poles, cables, wires, connectors, switching, regulating and transforming equipment, and associated ancillary facilities); and include, but are not limited to, (b) underground utility mark-out, potholing, concrete and asphalt cutting and removal, trenching, excavation, boring and drilling, access road and pole/tower pad and cable/wire pull station, substation construction, substructure installation, construction of tower footings and/or foundations, pole and tower installations, pipeline installations, welding, concrete and/ or pavement repair or replacement, and stockpile/borrow locations.

2. The utility company, municipality, or other public or private company or agency that owns or operates the linear underground/overhead project is responsible for obtaining coverage under the General Permit where the construction of pipelines, utility lines, fiber-optic cables, or other linear underground/overhead projects will occur across several properties unless the LUP construction activities are covered under another construction storm water permit.

3. Only LUPs shall comply with the conditions and requirements in Attachment A, A.1 & A.2 of this Order. The balance of this Order is not applicable to LUPs except as indicated in Attachment A.

B. Obtaining Permit Coverage Traditional Construction Sites

[8] These attachments are part of the General Permit itself and are not separate documents that are capable of being updated independently by the State Water Board.

1. The Legally Responsible Person (LRP) (see Special Provisions, Electronic Signature and Certification Requirements, Section IV.I.1) must obtain coverage under this General Permit.

2. To obtain coverage, the LRP must electronically file Permit Registration Documents (PRDs) prior to the commencement of construction activity. Failure to obtain coverage under this General Permit for storm water discharges to waters of the United States is a violation of the CWA and the California Water Code.

3. PRDs shall consist of:

   a. Notice of Intent (NOI)
   b. Risk Assessment (Section VIII)
   c. Site Map
   d. Storm Water Pollution Prevention Plan (Section XIV)
   e. Annual Fee
   f. Signed Certification Statement

   Any information provided to the Regional Water Board shall comply with the Homeland Security Act and any other federal law that concerns security in the United States; any information that does not comply should not be submitted.

   Attachment B contains additional PRD information. Dischargers must electronically file the PRDs, and mail the appropriate annual fee to the State Water Board.

4. This permit is effective on July 1, 2010.

   a. **Dischargers Obtaining Coverage On or After July 1, 2010:** All dischargers requiring coverage on or after July 1, 2010, shall electronically file their PRDs prior to the commencement of construction activities, and mail the appropriate annual fee no later than seven days prior to the commencement of construction activities. Permit coverage shall not commence until the PRDs and the annual fee are received by the State Water Board, and a WDID number is assigned and sent by SMARTS.

   b. **Dischargers Covered Under 99-08-DWQ and 2003-0007-DWQ:** Existing dischargers subject to State Water Board Order No. 99-08-DWQ (existing dischargers) will continue coverage under 99-08-DWQ until July 1, 2010. After July 1, 2010, all NOIs subject to State Water Board Order No. 99-08-DWQ will be terminated. Existing dischargers shall electronically file their PRDs no later than

   July 1, 2010. If an existing discharger's site acreage subject to the annual fee has changed, it shall mail a revised annual fee no less than seven days after receiving the revised annual fee notification, **or else lose permit coverage.** All existing dischargers shall be exempt from the risk determination requirements in Section VIII of this General Permit until two years after permit adoption. All existing dischargers are therefore subject to Risk Level 1 requirements regardless of their site's sediment and receiving water risks. However, a Regional Board retains the authority to require an existing discharger to comply with the Section VIII risk determination requirements.

5. The discharger is only considered covered by this General Permit upon receipt of a Waste Discharger Identification (WDID) number assigned and sent by the State Water Board Storm water Multi-Application and Report Tracking System (SMARTS). In order to demonstrate compliance with this General Permit, the discharger must obtain a WDID number and must present documentation of a valid WDID upon demand.

6. During the period this permit is subject to review by the U.S. EPA, the prior permit (State Water Board Order No. 99-08-DWQ) remains in effect. Existing dischargers under the prior permit will continue to have coverage under State Water Board Order No. 99-08-DWQ until this General Permit takes effect on July 1, 2010. Dischargers who complete their projects and electronically file an NOT prior to July 1, 2010, are not required to obtain coverage under this General Permit.

7. Small Construction Rainfall Erosivity Waiver

   EPA's Small Construction Erosivity Waiver applies to sites between one and five acres demonstrating that there are no adverse water quality impacts.

   Dischargers eligible for a Rainfall Erosivity Waiver based on low erosivity potential shall complete the electronic Notice of Intent (NOI) and Sediment Risk form through the State Water Board's SMARTS system, certifying that the construction activity will take place during a period when the value of the rainfall erosivity factor is less than five. Where the LRP changes or another LRP is added during construction, the new LRP must also submit a waiver certification through the SMARTS system.

   If a small construction site continues beyond the projected completion date given on the waiver certification, the LRP shall recalculate the rainfall erosivity factor for the new project duration and submit this

information through the SMARTS system. If the new R factor is below five (5), the discharger shall update through SMARTS all applicable information on the waiver certification and retain a copy of the revised waiver onsite. The LRP shall submit the new waiver certification 30 days prior to the projected completion date listed on the original waiver form to assure exemption from permitting requirements is uninterrupted. If the new R factor is five (5) or above, the LRP shall be required to apply for coverage under this Order.

8. In the case of a public emergency that requires immediate construction activities, a discharger shall submit a brief description of the emergency construction activity within five days of the onset of construction, and then shall submit all PRDs within thirty days.

C. Revising Permit Coverage for Change of Acreage or New Ownership

1. The discharger may reduce or increase the total acreage covered under this General Permit when a portion of the site is complete and/or conditions for termination of coverage have been met (See Section II.D Conditions for Termination of Coverage); when ownership of a portion of the site is sold to a different entity; or when new acreage, subject to this General Permit, is added to the site.

2. Within 30 days of a reduction or increase in total disturbed acreage, the discharger shall electronically file revisions to the PRDs that include:

   a. A revised NOI indicating the new project size;

   b. A revised site map showing the acreage of the site completed, acreage currently under construction, acreage sold/transferred or added, and acreage currently stabilized in accordance with the Conditions for Termination of Coverage in Section II.D below.

   c. SWPPP revisions, as appropriate; and

   d. Certification that any new landowners have been notified of applicable requirements to obtain General Permit coverage. The certification shall include the name, address, telephone number, and e-mail address of the new landowner.

   e. If the project acreage has increased, dischargers shall mail payment of revised annual fees within 14 days of receiving the revised annual fee notification.

3. The discharger shall continue coverage under the General Permit for any parcel that has not achieved "Final Stabilization" as defined in Section II.D.

4. When an LRP owns property with active General Permit coverage, and the LRP sells the property, or a parcel thereof, to another person, that person shall become an LRP with respect to whatever parcel was sold. The existing LRP shall inform the new LRP of the General Permit's requirements. In order for the new LRP to continue the construction activity on its parcel of property, the new LRP, or the new LRP's approved signatory, must submit PRDs in accordance with this General Permit's requirements.

D. Conditions for Termination of Coverage

1. Within 90 days of when construction is complete or ownership has been transferred, the discharger shall electronically file a Notice of Termination (NOT), a final site map, and photos through the State Water Boards SMARTS system. Filing a NOT certifies that all General Permit requirements have been met. The Regional Water Board will consider a construction site complete only when all portions of the site have been transferred to a new owner, or all of the following conditions have been met:

   a. For purposes of "final stabilization," the site will not pose any additional sediment discharge risk than it did prior to the commencement of construction activity;

   b. There is no potential for construction-related storm water pollutants to be discharged into site runoff;

   c. Final stabilization has been reached;

   d. Construction materials and wastes have been disposed of properly;

   e. Compliance with the Post-Construction Standards in Section XIII of this General Permit has been demonstrated;

   f. Post-construction storm water management measures have been installed and a long-term maintenance plan[7] has been established; and

[7] For the purposes of this requirement a long-term maintenance plan will be designed for a minimum of five years, and will describe the procedures to ensure that the post-construction storm water management measures are adequately maintained.

   g. All construction-related equipment, materials and any temporary BMPs no longer needed are removed from the site.

2. The discharger shall certify that final stabilization conditions are satisfied in their NOT. Failure to certify shall result in continuation of permit coverage and annual billing.

3. The NOT must demonstrate through photos, RUSLE or RUSLE2, or results of testing and analysis that the site meets all of the conditions above (Section II.D.1) and the final stabilization condition (Section II.D.1.a) is attained by one of the following methods:

   a. "70% final cover method," no computational proof required

      OR:

   b. "RUSLE or RUSLE2 method," computational proof required

      OR:

   c. "Custom method", the discharger shall demonstrate in some other manner than a or b, above, that the site complies with the "final stabilization" requirement in Section II.D.1.a.

III. DISCHARGE PROHIBITIONS

A. Dischargers shall not violate any discharge prohibitions contained in applicable Basin Plans or statewide water quality control plans. Waste discharges to Areas of Special Biological Significance (ASBS) are prohibited by the California Ocean Plan, unless granted an exception issued by the State Water Board.

B. All discharges are prohibited except for the storm water and non-storm water discharges specifically authorized by this General Permit or another NPDES permit.

C. Authorized non-storm water discharges may include those from de-chlorinated potable water sources such as: fire hydrant flushing, irrigation of vegetative erosion control measures, pipe flushing and testing, water to control dust, uncontaminated ground water from dewatering, and other discharges not subject to a separate general NPDES permit adopted by a Regional Water Board. The discharge of non-storm water is authorized under the following conditions:

1. The discharge does not cause or contribute to a violation of any water quality standard;

2. The discharge does not violate any other provision of this General Permit;

3. The discharge is not prohibited by the applicable Basin Plan;

4. The discharger has included and implemented specific BMPs required by this General Permit to prevent or reduce the contact of the non-storm water discharge with construction materials or equipment.

5. The discharge does not contain toxic constituents in toxic amounts or (other) significant quantities of pollutants;

6. The discharge is monitored and meets the applicable NALs and NELs; and

7. The discharger reports the sampling information in the Annual Report.

If any of the above conditions are not satisfied, the discharge is not authorized by this General Permit. The discharger shall notify the Regional Water Board of any anticipated non-storm water discharges not already authorized by this General Permit or another NPDES permit, to determine whether a separate NPDES permit is necessary.

D. Debris resulting from construction activities are prohibited from being discharged from construction sites.

E. When soil contamination is found or suspected and a responsible party is not identified, or the responsible party fails to promptly take the appropriate action, the discharger shall have those soils sampled and tested to ensure proper handling and public safety measures are implemented. The discharger shall notify the appropriate local, State, and federal agency(ies) when contaminated soil is found at a construction site, and will notify the appropriate Regional Water Board.

IV. SPECIAL PROVISIONS

A. Duty to Comply

1. The discharger shall comply with all of the conditions of this General Permit. Any permit noncompliance constitutes a violation of the Clean Water Act (CWA) and the Porter-Cologne Water Quality Control Act and is grounds for enforcement action and/or removal from General Permit coverage.

2. The discharger shall comply with effluent standards or prohibitions established under Section 307(a) of the CWA for toxic pollutants within the time provided in the regulations that establish these standards or prohibitions, even if this General Permit has not yet been modified to incorporate the requirement.

B. General Permit Actions

1. This General Permit may be modified, revoked and reissued, or terminated for cause. The filing of a request by the discharger for a General Permit modification, revocation and reissuance, or termination, or a notification of planned changes or anticipated noncompliance does not annul any General Permit condition.

2. If any toxic effluent standard or prohibition (including any schedule of compliance specified in such effluent standard or prohibition) is promulgated under Section 307(a) of the CWA for a toxic pollutant which is present in the discharge and that standard or prohibition is more stringent than any limitation on the pollutant in this General Permit, this General Permit shall be modified or revoked and reissued to conform to the toxic effluent standard or prohibition and the dischargers so notified.

C. Need to Halt or Reduce Activity Not a Defense

It shall not be a defense for a discharger in an enforcement action that it would have been necessary to halt or reduce the permitted activity in order to maintain compliance with the conditions of this General Permit.

D. Duty to Mitigate

The discharger shall take all responsible steps to minimize or prevent any discharge in violation of this General Permit, which has a reasonable likelihood of adversely affecting human health or the environment.

E. Proper Operation and Maintenance

The discharger shall at all times properly operate and maintain any facilities and systems of treatment and control (and related appurtenances) which are installed or used by the discharger to achieve compliance with the conditions of this General Permit. Proper operation and maintenance also includes adequate laboratory controls and appropriate quality assurance procedures. Proper operation and maintenance may require the operation of backup or auxiliary facilities or similar systems installed by a discharger when necessary to achieve compliance with the conditions of this General Permit.

F. Property Rights

This General Permit does not convey any property rights of any sort or any exclusive privileges, nor does it authorize any injury to private property or any invasion of personal rights, nor does it authorize any infringement of Federal, State, or local laws or regulations.

G. Duty to Maintain Records and Provide Information

1. The discharger shall maintain a paper or electronic copy of all required records, including a copy of this General Permit, for three years from the date generated or date submitted, whichever is last. These records shall be available at the construction site until construction is completed.

2. The discharger shall furnish the Regional Water Board, State Water Board, or U.S. EPA, within a reasonable time, any requested information to determine compliance with this General Permit. The discharger shall also furnish, upon request, copies of records that are required to be kept by this General Permit.

H. Inspection and Entry

The discharger shall allow the Regional Water Board, State Water Board, U.S. EPA, and/or, in the case of construction sites which discharge through a municipal separate storm sewer, an authorized representative of the municipal operator of the separate storm sewer system receiving the discharge, upon the presentation of credentials and other documents as may be required by law, to:

1. Enter upon the discharger's premises at reasonable times where a regulated construction activity is being conducted or where records must be kept under the conditions of this General Permit;

2. Access and copy at reasonable times any records that must be kept under the conditions of this General Permit;

3. Inspect at reasonable times the complete construction site, including any off-site staging areas or material storage areas, and the erosion/sediment controls; and

4. Sample or monitor at reasonable times for the purpose of ensuring General Permit compliance.

I. Electronic Signature and Certification Requirements

1. All Permit Registration Documents (PRDs) and Notice of Terminations (NOTs) shall be electronically signed, certified, and submitted via SMARTS to the State Water Board. Either the Legally Responsible Person (LRP) or a person legally authorized to sign and certify PRDs and NOTs on behalf of the LRP (the LRP's Approved Signatory) must submit all information electronically via SMARTS.

   a. The LRP's Approved Signatory must be one of the following:

      i. For a corporation: a responsible corporate officer. For the purpose of this section, a responsible corporate officer means: (a) a president, secretary, treasurer, or vice-president of the corporation in charge of a principal business function, or any other person who performs similar policy or decision-making functions for the corporation; or (b) the manager of the facility if authority to sign documents has been assigned or delegated to the manager in accordance with corporate procedures;

      ii. For a partnership or sole proprietorship: a general partner or the proprietor, respectively;

      iii. For a municipality, State, Federal, or other public agency: either a principal executive officer or ranking elected official. The principal executive officer of a Federal agency includes the chief executive officer of the agency or the senior executive officer having responsibility for the overall operations of a principal geographic unit of the agency (e.g., Regional Administrators of U.S. EPA);

      iv. For the military: Any military officer who has been designated.

      v. For a public university: An authorized university official

b. Changes to Authorization. If an approved signatory's authorization is no longer accurate, a new authorization satisfying the requirements of paragraph (a) of this section must be submitted via SMARTS prior to or together with any reports, information or applications to be signed by an approved signatory.

2. All Annual Reports, or other information required by the General Permit (other than PRDs and NOTs) or requested by the Regional Water Board, State Water Board, U.S. EPA, or local storm water management agency shall be certified and submitted by the LRP or the LRP's approved signatory as described above.

J. Certification

Any person signing documents under Section IV.I above, shall make the following certification:

"I certify under penalty of law that this document and all attachments were prepared under my direction or supervision in accordance with a system designed to assure that qualified personnel properly gather and evaluate the information submitted. Based on my inquiry of the person or persons who manage the system or those persons directly responsible for gathering the information, to the best of my knowledge and belief, the information submitted is, true, accurate, and complete. I am aware that there are significant penalties for submitting false information, including the possibility of fine and imprisonment for knowing violations."

K. Anticipated Noncompliance

The discharger shall give advance notice to the Regional Water Board and local storm water management agency of any planned changes in the construction activity, which may result in noncompliance with General Permit requirements.

L. Bypass

Bypass[8] is prohibited. The Regional Water Board may take enforcement action against the discharger for bypass unless:

1. Bypass was unavoidable to prevent loss of life, personal injury or severe property damage;[9]

[8] The intentional diversion of waste streams from any portion of a treatment facility
[9] Severe property damage means substantial physical damage to property, damage to the treatment facilities that causes them to become inoperable, or substantial and permanent loss of natural resources that can reasonably be expected to occur in the absence of a bypass. Severe property damage does not mean economic loss caused by delays in production.

2. There were no feasible alternatives to bypass, such as the use of auxiliary treatment facilities, retention of untreated waste, or maintenance during normal periods of equipment downtime. This condition is not satisfied if adequate back-up equipment should have been installed in the exercise of reasonable engineering judgment to prevent a bypass that could occur during normal periods of equipment downtime or preventative maintenance;

3. The discharger submitted a notice at least ten days in advance of the need for a bypass to the Regional Water Board; or

4. The discharger may allow a bypass to occur that does not cause effluent limitations to be exceeded, but only if it is for essential maintenance to assure efficient operation. In such a case, the above bypass conditions are not applicable. The discharger shall submit notice of an unanticipated bypass as required.

M. Upset

1. A discharger that wishes to establish the affirmative defense of an upset[10] in an action brought for noncompliance shall demonstrate, through properly signed, contemporaneous operating logs, or other relevant evidence that:

   a. An upset occurred and that the discharger can identify the cause(s) of the upset

   b. The treatment facility was being properly operated by the time of the upset

   c. The discharger submitted notice of the upset as required; and

   d. The discharger complied with any remedial measures required

2. No determination made before an action of noncompliance occurs, such as during administrative review of claims that noncompliance was caused by an upset, is final administrative action subject to judicial review.

3. In any enforcement proceeding, the discharger seeking to establish the occurrence of an upset has the burden of proof

[10] An exceptional incident in which there is unintentional and temporary noncompliance the technology based numeric effluent limitations because of factors beyond the reasonable control of the discharger. An upset does not include noncompliance to the extent caused by operational error, improperly designed treatment facilities, inadequate treatment facilities, lack of preventative maintenance, or careless or improper operation.

N. Penalties for Falsification of Reports

Section 309(c)(4) of the CWA provides that any person who knowingly makes any false material statement, representation, or certification in any record or other document submitted or required to be maintained under this General Permit, including reports of compliance or noncompliance shall upon conviction, be punished by a fine of not more than $10,000 or by imprisonment for not more than two years or by both.

O. Oil and Hazardous Substance Liability

Nothing in this General Permit shall be construed to preclude the institution of any legal action or relieve the discharger from any responsibilities, liabilities, or penalties to which the discharger is or may be subject to under Section 311 of the CWA.

P. Severability

The provisions of this General Permit are severable; and, if any provision of this General Permit or the application of any provision of this General Permit to any circumstance is held invalid, the application of such provision to other circumstances and the remainder of this General Permit shall not be affected thereby.

Q. Reopener Clause

This General Permit may be modified, revoked and reissued, or terminated for cause due to promulgation of amended regulations, receipt of U.S. EPA guidance concerning regulated activities, judicial decision, or in accordance with 40 Code of Federal Regulations (CFR) 122.62, 122.63, 122.64, and 124.5.

R. Penalties for Violations of Permit Conditions

1. Section 309 of the CWA provides significant penalties for any person who violates a permit condition implementing Sections 301, 302, 306, 307, 308, 318, or 405 of the CWA or any permit condition or limitation implementing any such section in a permit issued under Section 402. Any person who violates any permit condition of this General Permit is subject to a civil penalty not to exceed $37,500[11] per calendar day of such violation, as well as any other appropriate sanction provided by Section 309 of the CWA.

[11] May be further adjusted in accordance with the Federal Civil Penalties Inflation Adjustment Act.

2. The Porter-Cologne Water Quality Control Act also provides for civil and criminal penalties, which in some cases are greater than those under the CWA.

S. Transfers

This General Permit is not transferable.

T. Continuation of Expired Permit

This General Permit continues in force and effect until a new General Permit is issued or the SWRCB rescinds this General Permit. Only those dischargers authorized to discharge under the expiring General Permit are covered by the continued General Permit.

V. EFFLUENT STANDARDS

A. Narrative Effluent Limitations

1. Storm water discharges and authorized non-storm water discharges regulated by this General Permit shall not contain a hazardous substance equal to or in excess of reportable quantities established in 40 C.F.R. §§ 117.3 and 302.4, unless a separate NPDES Permit has been issued to regulate those discharges.

2. Dischargers shall minimize or prevent pollutants in storm water discharges and authorized non-storm water discharges through the use of controls, structures, and management practices that achieve BAT for toxic and non-conventional pollutants and BCT for conventional pollutants.

B. Numeric Effluent Limitations (NELs)

Table 1- Numeric Effluent Limitations, Numeric Action Levels, Test Methods, Detection Limits, and Reporting Units

Parameter	Test Method	Discharge Type	Min. Detection Limit	Units	Numeric Action Level	Numeric Effluent Limitation
pH	Field test with calibrated portable instrument	Risk Level 2	0.2	pH units	lower NAL = 6.5 upper NAL = 8.5	N/A
		Risk Level 3			lower NAL = 6.5 upper NAL = 8.5	lower NEL = 6.0 upper NEL = 9.0
Turbidity	EPA 0180.1 and/or field test with calibrated portable instrument	Risk Level 2	1	NTU	250 NTU	N/A
		Risk Level 3			250 NTU	500 NTU

1. Numeric Effluent Limitations (NELs):

   a. **Storm Event, Daily Average pH Limits** – For Risk Level 3 dischargers, the pH of storm water and non-storm water discharges

shall be within the ranges specified in Table 1 during any site phase where there is a "high risk of pH discharge."[12]

   b. **Storm Event Daily Average Turbidity Limit** – For Risk Level 3 dischargers, the turbidity of storm water and non-storm water discharges shall not exceed 500 NTU.

2. If daily average sampling results are outside the range of pH NELs (i.e., is below the lower NEL for pH or exceeds the upper NEL for pH) or exceeds the turbidity NEL (as listed in Table 1), the discharger is in violation of this General Permit and shall electronically file monitoring results in violation within 5 business days of obtaining the results.

3. **Compliance Storm Event:**

   Discharges of storm water from Risk Level 3 sites shall comply with applicable NELs (above) unless the storm event causing the discharges is determined after the fact to be equal to or larger than the Compliance Storm Event (expressed in inches of rainfall). The Compliance Storm Event for Risk Level 3 discharges is the 5 year, 24 hour storm (expressed in tenths of an inch of rainfall), as determined by using these maps:

   http://www.wrcc.dri.edu/pcpnfreq/nca5y24.gif
   http://www.wrcc.dri.edu/pcpnfreq/sca5y24.gif

   Compliance storm event verification shall be done by reporting on-site rain gauge readings as well as nearby governmental rain gauge readings.

4. Dischargers shall not be required to comply with NELs if the site receives run-on from a forest fire or any other natural disaster.

C. Numeric Action Levels (NALs)

1. For Risk Level 2 and 3 dischargers, the lower storm event average NAL for pH is 6.5 pH units and the upper storm event average NAL for pH is 8.5 pH units. The discharger shall take actions as described below if the discharge is outside of this range of pH values.

[12] A period of high risk of pH discharge is defined as a project's complete utilities phase, complete vertical build phase, and any portion of any phase where significant amounts of materials are placed directly on the land at the site in a manner that could result in significant alterations of the background pH of the discharges.

2. For Risk Level 2 and 3 dischargers, the NAL storm event daily average for turbidity is 250 NTU. The discharger shall take actions as described below if the discharge is outside of this range of turbidity values.

3. Whenever the results from a storm event daily average indicate that the discharge is below the lower NAL for pH, exceeds the upper NAL for pH, or exceeds the turbidity NAL (as listed in Table 1), the discharger shall conduct a construction site and run-on evaluation to determine whether pollutant source(s) associated with the site's construction activity may have caused or contributed to the NAL exceedance and shall immediately implement corrective actions if they are needed.

4. The site evaluation shall be documented in the SWPPP and specifically address whether the source(s) of the pollutants causing the exceedance of the NAL:

   a. Are related to the construction activities and whether additional BMPs are required to (1) meet BAT/BCT requirements; (2) reduce or prevent pollutants in storm water discharges from causing exceedances of receiving water objectives; and (3) determine what corrective action(s) were taken or will be taken and with a description of the schedule for completion.

   AND/OR:

   b. Are related to the run-on associated with the construction site location and whether additional BMPs measures are required to (1) meet BAT/BCT requirements; (2) reduce or prevent pollutants in storm water discharges from causing exceedances of receiving water objectives; and (3) what corrective action(s) were taken or will be taken with a description of the schedule for completion.

VI. RECEIVING WATER LIMITATIONS

A. The discharger shall ensure that storm water discharges and authorized non-storm water discharges to any surface or ground water will not adversely affect human health or the environment.

B. The discharger shall ensure that storm water discharges and authorized non-storm water discharges will not contain pollutants in quantities that threaten to cause pollution or a public nuisance.

C. The discharger shall ensure that storm water discharges and authorized non-storm water discharges will not contain pollutants that cause or contribute to an exceedance of any applicable water quality objectives or water quality standards (collectively, WQS) contained in a Statewide Water Quality Control Plan, the California Toxics Rule, the National Toxics Rule, or the applicable Regional Water Board's Water Quality Control Plan (Basin Plan).

D. Dischargers located within the watershed of a CWA § 303(d) impaired water body, for which a TMDL has been approved by the U.S. EPA, shall comply with the approved TMDL if it identifies "construction activity" or land disturbance as a source of the pollution.

VII. TRAINING QUALIFICATIONS AND CERTIFICATION REQUIREMENTS

A. General

The discharger shall ensure that all persons responsible for implementing requirements of this General Permit shall be appropriately trained in accordance with this Section. Training should be both formal and informal, occur on an ongoing basis, and should include training offered by recognized governmental agencies or professional organizations. Those responsible for preparing and amending SWPPPs shall comply with the requirements in this Section VII.

The discharger shall provide documentation of all training for persons responsible for implementing the requirements of this General Permit in the Annual Reports.

B. SWPPP Certification Requirements

1. **Qualified SWPPP Developer:** The discharger shall ensure that SWPPPs are written, amended and certified by a Qualified SWPPP Developer (QSD). A QSD shall have one of the following registrations or certifications, and appropriate experience, as required for:

   a. A California registered professional civil engineer;

   b. A California registered professional geologist or engineering geologist;

   c. A California registered landscape architect;

   d. A professional hydrologist registered through the American Institute of Hydrology;

   e. A Certified Professional in Erosion and Sediment Control (CPESC) ™ registered through Enviro Cert International, Inc.;

   f. A Certified Professional in Storm Water Quality (CPSWQ) ™ registered through Enviro Cert International, Inc.; or

   g. A professional in erosion and sediment control registered through the National Institute for Certification in Engineering Technologies (NICET).

Effective two years after the adoption date of this General Permit, a QSD shall have attended a State Water Board-sponsored or approved QSD training course.

2. The discharger shall list the name and telephone number of the currently designated Qualified SWPPP Developer(s) in the SWPPP.

3. **Qualified SWPPP Practitioner:** The discharger shall ensure that all BMPs required by this General Permit are implemented by a Qualified SWPPP Practitioner (QSP). A QSP is a person responsible for non-storm water and storm water visual observations, sampling and analysis. Effective two years from the date of adoption of this General Permit, a QSP shall be either a QSD or have one of the following certifications:

   a. A certified erosion, sediment and storm water inspector registered through Enviro Cert International, Inc.; or

   b. A certified inspector of sediment and erosion control registered through Certified Inspector of Sediment and Erosion Control, Inc.

   Effective two years after the adoption date of this General Permit, a QSP shall have attended a State Water Board-sponsored or approved QSP training course.

4. The LRP shall list in the SWPPP, the name of any Approved Signatory, and provide a copy of the written agreement or other mechanism that provides this authority from the LRP in the SWPPP.

5. The discharger shall include, in the SWPPP, a list of names of all contractors, subcontractors, and individuals who will be directed by the Qualified SWPPP Practitioner. This list shall include telephone numbers and work addresses. Specific areas of responsibility of each subcontractor and emergency contact numbers shall also be included.

6. The discharger shall ensure that the SWPPP and each amendment will be signed by the Qualified SWPPP Developer. The discharger shall include a listing of the date of initial preparation and the date of each amendment in the SWPPP.

VIII. RISK DETERMINATION

The discharger shall calculate the site's sediment risk and receiving water risk during periods of soil exposure (i.e. grading and site stabilization) and use the calculated risks to determine a Risk Level(s) using the methodology in

Appendix 1. For any site that spans two or more planning watersheds,[13] the discharger shall calculate a separate Risk Level for each planning watershed. The discharger shall notify the State Water Board of the site's Risk Level determination(s) and shall include this determination as a part of submitting the PRDs. If a discharger ends up with more than one Risk Level determination, the Regional Water Board may choose to break the project into separate levels of implementation.

IX.RISK LEVEL 1 REQUIREMENTS

Risk Level 1 Dischargers shall comply with the requirements included in Attachment C of this General Permit.

X. RISK LEVEL 2 REQUIREMENTS

Risk Level 2 Dischargers shall comply with the requirements included in Attachment D of this General Permit.

XI.RISK LEVEL 3 REQUIREMENTS

Risk Level 3 Dischargers shall comply with the requirements included in Attachment E of this General Permit.

XII. ACTIVE TREATMENT SYSTEMS (ATS)

Dischargers choosing to implement an ATS on their site shall comply with all of the requirements in Attachment F of this General Permit.

[13] Planning watershed: defined by the Calwater Watershed documents as a watershed that ranges in size from approximately 3,000 to 10,000 acres http://cain.ice.ucdavis.edu/calwater/calwfaq.html, http://gis.ca.gov/catalog/BrowseRecord.epl?id=22175 .

XIII. POST-CONSTRUCTION STANDARDS

A. All dischargers shall comply with the following runoff reduction requirements unless they are located within an area subject to post-construction standards of an active Phase I or II municipal separate storm sewer system (MS4) permit that has an approved Storm Water Management Plan.

1. This provision shall take effect three years from the adoption date of this permit, or later at the discretion of the Executive Officer of the Regional Board.

2. The discharger shall demonstrate compliance with the requirements of this section by submitting with their NOI a map and worksheets in accordance with the instructions in Appendix 2. The discharger shall use non-structural controls unless the discharger demonstrates that non-structural controls are infeasible or that structural controls will produce greater reduction in water quality impacts.

3. The discharger shall, through the use of non-structural and structural measures as described in Appendix 2, replicate the pre-project water balance (for this permit, defined as the volume of rainfall that ends up as runoff) for the smallest storms up to the 85th percentile storm event (or the smallest storm event that generates runoff, whichever is larger). Dischargers shall inform Regional Water Board staff at least 30 days prior to the use of any structural control measure used to comply with this requirement. Volume that cannot be addressed using non-structural practices shall be captured in structural practices and approved by the Regional Water Board. When seeking Regional Board approval for the use of structural practices, dischargers shall document the infeasibility of using non-structural practices on the project site, or document that there will be fewer water quality impacts through the use of structural practices.

4. For sites whose disturbed area exceeds two acres, the discharger shall preserve the pre-construction drainage density (miles of stream length per square mile of drainage area) for all drainage areas within the area serving a first order stream[14] or larger stream and ensure that post-project time of runoff concentration is equal or greater than pre-project time of concentration.

[14] A first order stream is defined as a stream with no tributaries.

B. All dischargers shall implement BMPs to reduce pollutants in storm water discharges that are reasonably foreseeable after all construction phases have been completed at the site (Post-construction BMPs).

XIV. SWPPP REQUIREMENTS

A. The discharger shall ensure that the Storm Water Pollution Prevention Plans (SWPPPs) for all traditional project sites are developed and amended or revised by a QSD. The SWPPP shall be designed to address the following objectives:

1. All pollutants and their sources, including sources of sediment associated with construction, construction site erosion and all other activities associated with construction activity are controlled;
2. Where not otherwise required to be under a Regional Water Board permit, all non-storm water discharges are identified and either eliminated, controlled, or treated;
3. Site BMPs are effective and result in the reduction or elimination of pollutants in storm water discharges and authorized non-storm water discharges from construction activity to the BAT/BCT standard;
4. Calculations and design details as well as BMP controls for site run-on are complete and correct, and
5. Stabilization BMPs installed to reduce or eliminate pollutants after construction are completed.

B. To demonstrate compliance with requirements of this General Permit, the QSD shall include information in the SWPPP that supports the conclusions, selections, use, and maintenance of BMPs.

C. The discharger shall make the SWPPP available at the construction site during working hours while construction is occurring and shall be made available upon request by a State or Municipal inspector. When the original SWPPP is retained by a crewmember in a construction vehicle and is not currently at the construction site, current copies of the BMPs and map/drawing will be left with the field crew and the original SWPPP shall be made available via a request by radio/telephone.

XV. REGIONAL WATER BOARD AUTHORITIES

A. In the case where the Regional Water Board does not agree with the discharger's self-reported risk level (e.g., they determine themselves to be a Level 1 Risk when they are actually a Level 2 Risk site), Regional Water Boards may either direct the discharger to reevaluate the Risk Level(s) for their site or terminate coverage under this General Permit.

B. Regional Water Boards may terminate coverage under this General Permit for dischargers who fail to comply with its requirements or where they determine that an individual NPDES permit is appropriate.

C. Regional Water Boards may require dischargers to submit a Report of Waste Discharge / NPDES permit application for Regional Water Board consideration of individual requirements.

D. Regional Water Boards may require additional Monitoring and Reporting Program Requirements, including sampling and analysis of discharges to sediment-impaired water bodies.

E. Regional Water Boards may require dischargers to retain records for more than the three years required by this General Permit.

XVI. ANNUAL REPORTING REQUIREMENTS

A. All dischargers shall prepare and electronically submit an Annual Report no later than September 1 of each year.

B. The discharger shall certify each Annual Report in accordance with the Special Provisions.

C. The discharger shall retain an electronic or paper copy of each Annual Report for a minimum of three years after the date the annual report is filed.

D. The discharger shall include storm water monitoring information in the Annual Report consisting of:

1. a summary and evaluation of all sampling and analysis results, including copies of laboratory reports;
2. the analytical method(s), method reporting unit(s), and method detection limit(s) of each analytical parameter (analytical results that are less than the method detection limit shall be reported as "less than the method detection limit");
3. a summary of all corrective actions taken during the compliance year;
4. identification of any compliance activities or corrective actions that were not implemented;
5. a summary of all violations of the General Permit;
6. the names of individual(s) who performed the facility inspections, sampling, visual observation (inspections), and/or measurements;
7. the date, place, time of facility inspections, sampling, visual observation (inspections), and/or measurements, including precipitation (rain gauge); and
8. the visual observation and sample collection exception records and reports specified in Attachments C, D, and E.

E. The discharger shall provide training information in the Annual Report consisting of:

1. documentation of all training for individuals responsible for all activities associated with compliance with this General Permit;

2. documentation of all training for individuals responsible for BMP installation, inspection, maintenance, and repair; and

3. documentation of all training for individuals responsible for overseeing, revising, and amending the SWPPP.

ATTACHMENT C
RISK LEVEL 1 REQUIREMENTS

A. Effluent Standards

[These requirements are the same as those in the General Permit order.]

1. Narrative – Risk Level 1 dischargers shall comply with the narrative effluent standards listed below:

   a. Storm water discharges and authorized non-storm water discharges regulated by this General Permit shall not contain a hazardous substance equal to or in excess of reportable quantities established in 40 C.F.R. §§ 117.3 and 302.4, unless a separate NPDES Permit has been issued to regulate those discharges.

   b. Dischargers shall minimize or prevent pollutants in storm water discharges and authorized non-storm water discharges through the use of controls, structures, and management practices that achieve BAT for toxic and non-conventional pollutants and BCT for conventional pollutants.

2. Numeric – Risk Level 1 dischargers are not subject to a numeric effluent standard.

B. Good Site Management "Housekeeping"

1. Risk Level 1 dischargers shall implement good site management (i.e., "housekeeping") measures for construction materials that could potentially be a threat to water quality if discharged. At a minimum, Risk Level 1 dischargers shall implement the following good housekeeping measures:

   a. Conduct an inventory of the products used and/or expected to be used and the end products that are produced and/or expected to be produced. This does not include materials and equipment that are designed to be outdoors and exposed to environmental conditions (i.e. poles, equipment pads, cabinets, conductors, insulators, bricks, etc.).

   b. Cover and berm loose stockpiled construction materials that are not actively being used (i.e. soil, spoils, aggregate, fly-ash, stucco, hydrated lime, etc.).

   c. Store chemicals in watertight containers (with appropriate secondary containment to prevent any spillage or leakage) or in a storage shed (completely enclosed).

   d. Minimize exposure of construction materials to precipitation. This does not include materials and equipment that are designed to be outdoors and exposed to environmental conditions (i.e. poles, equipment pads, cabinets, conductors, insulators, bricks, etc.).

   e. Implement BMPs to prevent the off-site tracking of loose construction and landscape materials.

2. Risk Level 1 dischargers shall implement good housekeeping measures for waste management, which, at a minimum, shall consist of the following:

   a. Prevent disposal of any rinse or wash waters or materials on impervious or pervious site surfaces or into the storm drain system.

   b. Ensure the containment of sanitation facilities (e.g., portable toilets) to prevent discharges of pollutants to the storm water drainage system or receiving water.

   c. Clean or replace sanitation facilities and inspecting them regularly for leaks and spills.

   d. Cover waste disposal containers at the end of every business day and during a rain event.

   e. Prevent discharges from waste disposal containers to the storm water drainage system or receiving water.

   f. Contain and securely protect stockpiled waste material from wind and rain at all times unless actively being used.

   g. Implement procedures that effectively address hazardous and non-hazardous spills.

   h. Develop a spill response and implementation element of the SWPPP prior to commencement of construction activities. The SWPPP shall require that:

      i. Equipment and materials for cleanup of spills shall be available on site and that spills and leaks shall be cleaned up immediately and disposed of properly; and

      ii. Appropriate spill response personnel are assigned and trained.

   i. Ensure the containment of concrete washout areas and other washout areas that may contain additional pollutants so there is no discharge into the underlying soil and onto the surrounding areas.

3. Risk Level 1 dischargers shall implement good housekeeping for vehicle storage and maintenance, which, at a minimum, shall consist of the following:

   a. Prevent oil, grease, or fuel to leak in to the ground, storm drains or surface waters.

   b. Place all equipment or vehicles, which are to be fueled, maintained and stored in a designated area fitted with appropriate BMPs.

   c. Clean leaks immediately and disposing of leaked materials properly.

4. Risk Level 1 dischargers shall implement good housekeeping for landscape materials, which, at a minimum, shall consist of the following:

   a. Contain stockpiled materials such as mulches and topsoil when they are not actively being used.

   b. Contain fertilizers and other landscape materials when they are not actively being used.

   c. Discontinue the application of any erodible landscape material within 2 days before a forecasted rain event or during periods of precipitation.

   d. Apply erodible landscape material at quantities and application rates according to manufacture recommendations or based on written specifications by knowledgeable and experienced field personnel.

   e. Stack erodible landscape material on pallets and covering or storing such materials when not being used or applied.

5. Risk Level 1 dischargers shall conduct an assessment and create a list of potential pollutant sources and identify any areas of the site where additional BMPs are necessary to reduce or prevent pollutants in storm water discharges and authorized non-storm water discharges. This potential pollutant list shall be kept with the SWPPP and shall identify

all non-visible pollutants which are known, or should be known, to occur on the construction site. At a minimum, when developing BMPs, Risk Level 1 dischargers shall do the following:

a. Consider the quantity, physical characteristics (e.g., liquid, powder, solid), and locations of each potential pollutant source handled, produced, stored, recycled, or disposed of at the site.

b. Consider the degree to which pollutants associated with those materials may be exposed to and mobilized by contact with storm water.

c. Consider the direct and indirect pathways that pollutants may be exposed to storm water or authorized non-storm water discharges. This shall include an assessment of past spills or leaks, non-storm water discharges, and discharges from adjoining areas.

d. Ensure retention of sampling, visual observation, and inspection records.

e. Ensure effectiveness of existing BMPs to reduce or prevent pollutants in storm water discharges and authorized non-storm water discharges.

6. Risk Level 1 dischargers shall implement good housekeeping measures on the construction site to control the air deposition of site materials and from site operations. Such particulates can include, but are not limited to, sediment, nutrients, trash, metals, bacteria, oil and grease and organics.

C. Non-Storm Water Management

1. Risk Level 1 dischargers shall implement measures to control all non-storm water discharges during construction.

2. Risk Level 1 dischargers shall wash vehicles in such a manner as to prevent non-storm water discharges to surface waters or MS4 drainage systems.

3. Risk Level 1 dischargers shall clean streets in such a manner as to prevent unauthorized non-storm water discharges from reaching surface water or MS4 drainage systems.

D. Erosion Control

1. Risk Level 1 dischargers shall implement effective wind erosion control.

2. Risk Level 1 dischargers shall provide effective soil cover for inactive[1] areas and all finished slopes, open space, utility backfill, and completed lots.

3. Risk Level 1 dischargers shall limit the use of plastic materials when more sustainable, environmentally friendly alternatives exist. Where plastic materials are deemed necessary, the discharger shall consider the use of plastic materials resistant to solar degradation.

E. Sediment Controls

1. Risk Level 1 dischargers shall establish and maintain effective perimeter controls and stabilize all construction entrances and exits to sufficiently control erosion and sediment discharges from the site.

2. On sites where sediment basins are to be used, Risk Level 1 dischargers shall, at minimum, design sediment basins according to the method provided in CASQA's Construction BMP Guidance Handbook.

F. Run-on and Runoff Controls

Risk Level 1 dischargers shall effectively manage all run-on, all runoff within the site and all runoff that discharges off the site. Run-on from off site shall be directed away from all disturbed areas or shall collectively be in compliance with the effluent limitations in this General Permit.

G. Inspection, Maintenance and Repair

1. Risk Level 1 dischargers shall ensure that all inspection, maintenance repair and sampling activities at the project location shall be performed or supervised by a Qualified SWPPP Practitioner (QSP) representing the discharger. The QSP may delegate any or all of these activities to an employee trained to do the task(s) appropriately, but shall ensure adequate deployment.

2. Risk Level 1 dischargers shall perform weekly inspections and observations, and at least once each 24-hour period during extended

[1] Inactive areas of construction are areas of construction activity that have been disturbed and are not scheduled to be re-disturbed for at least 14 days.

storm events, to identify and record BMPs that need maintenance to operate effectively, that have failed, or that could fail to operate as intended. Inspectors shall be the QSP or be trained by the QSP.

3. Upon identifying failures or other shortcomings, as directed by the QSP, Risk Level 1 dischargers shall begin implementing repairs or design changes to BMPs within 72 hours of identification and complete the changes as soon as possible.

4. For each inspection required, Risk Level 1 dischargers shall complete an inspection checklist, using a form provided by the State Water Board or Regional Water Board or in an alternative format.

5. Risk Level 1 dischargers shall ensure that checklists shall remain onsite with the SWPPP and at a minimum, shall include:

a. Inspection date and date the inspection report was written.

b. Weather information, including presence or absence of precipitation, estimate of beginning of qualifying storm event, duration of event, time elapsed since last storm, and approximate amount of rainfall in inches.

c. Site information, including stage of construction, activities completed, and approximate area of the site exposed.

d. A description of any BMPs evaluated and any deficiencies noted.

e. If the construction site is safely accessible during inclement weather, list the observations of all BMPs: erosion controls, sediment controls, chemical and waste controls, and non-storm water controls. Otherwise, list the results of visual inspections at all relevant outfalls, discharge points, downstream locations and any projected maintenance activities.

f. Report the presence of noticeable odors or of any visible sheen on the surface of any discharges.

g. Any corrective actions required, including any necessary changes to the SWPPP and the associated implementation dates.

h. Photographs taken during the inspection, if any.

i. Inspector's name, title, and signature.

H. Rain Event Action Plan
Not required for Risk Level 1 dischargers.

I. **Risk Level 1 Monitoring and Reporting Requirements**

Table 1- Summary of Monitoring Requirements

Risk Level	Visual Inspections					Sample Collection	
	Quarterly Non-storm Water Discharge	Pre-storm Event		Daily Storm BMP	Post Storm	Storm Water Discharge	Receiving Water
		Baseline	REAP				
1	X	X		X	X		

1. **Construction Site Monitoring Program Requirements**

   a. Pursuant to Water Code Sections 13383 and 13267, all dischargers subject to this General Permit shall develop and implement a written site-specific Construction Site Monitoring Program (CSMP) in accordance with the requirements of this Section. The CSMP shall include all monitoring procedures and instructions, location maps, forms, and checklists as required in this section. The CSMP shall be developed prior to the commencement of construction activities, and revised as necessary to reflect project revisions. The CSMP shall be a part of the Storm Water Pollution Prevention Plan (SWPPP), included as an appendix or separate SWPPP chapter.

   b. Existing dischargers registered under the State Water Board Order No. 99-08-DWQ shall make and implement necessary revisions to their Monitoring Programs to reflect the changes in this General Permit in a timely manner, but no later than July 1, 2010. Existing dischargers shall continue to implement their existing Monitoring Programs in compliance with State Water Board Order No. 99-08-DWQ until the necessary revisions are completed according to the schedule above.

   c. When a change of ownership occurs for all or any portion of the construction site prior to completion or final stabilization, the new discharger shall comply with these requirements as of the date the ownership change occurs.

2. **Objectives**

   The CSMP shall be developed and implemented to address the following objectives:

   a. To demonstrate that the site is in compliance with the Discharge Prohibitions;

   b. To determine whether non-visible pollutants are present at the construction site and are causing or contributing to exceedances of water quality objectives;

   c. To determine whether immediate corrective actions, additional Best Management Practice (BMP) implementation, or SWPPP revisions are necessary to reduce pollutants in storm water discharges and authorized non-storm water discharges; and

   d. To determine whether BMPs included in the SWPPP are effective in preventing or reducing pollutants in storm water discharges and authorized non-storm water discharges.

3. **Risk Level 1 - Visual Monitoring (Inspection) Requirements for Qualifying Rain Events**

   a. Risk Level 1 dischargers shall visually observe (inspect) storm water discharges at all discharge locations within two business days (48 hours) after each qualifying rain event.

   b. Risk Level 1 dischargers shall visually observe (inspect) the discharge of stored or contained storm water that is derived from and discharged subsequent to a qualifying rain event producing precipitation of ½ inch or more at the time of discharge. Stored or contained storm water that will likely discharge after operating hours due to anticipated precipitation shall be observed prior to the discharge during operating hours.

   c. Risk Level 1 dischargers shall conduct visual observations (inspections) during business hours only.

   d. Risk Level 1 dischargers shall record the time, date and rain gauge reading of all qualifying rain events.

   e. Within 2 business days (48 hours) prior to each qualifying rain event, Risk Level 1 dischargers shall visually observe (inspect):

      i. All storm water drainage areas to identify any spills, leaks, or uncontrolled pollutant sources. If needed, the discharger shall implement appropriate corrective actions.

      ii. All BMPs to identify whether they have been properly implemented in accordance with the SWPPP. If needed, the discharger shall implement appropriate corrective actions.

      iii. Any storm water storage and containment areas to detect leaks and ensure maintenance of adequate freeboard.

   f. For the visual observations (inspections) described in e.i and e.iii above, Risk Level 1 dischargers shall observe the presence or absence of floating and suspended materials, a sheen on the surface, discolorations, turbidity, odors, and source(s) of any observed pollutants.

   g. Within two business days (48 hours) after each qualifying rain event, Risk Level 1 dischargers shall conduct post rain event visual observations (inspections) to (1) identify whether BMPs were adequately designed, implemented, and effective, and (2) identify additional BMPs and revise the SWPPP accordingly.

   h. Risk Level 1 dischargers shall maintain on-site records of all visual observations (inspections), personnel performing the observations, observation dates, weather conditions, locations observed, and corrective actions taken in response to the observations.

4. **Risk Level 1 – Visual Observation Exemptions**

   a. Risk Level 1 dischargers shall be prepared to conduct visual observation (inspections) until the minimum requirements of Section I.3 above are completed. Risk Level 1 dischargers are not required to conduct visual observation (inspections) under the following conditions:

      i. During dangerous weather conditions such as flooding and electrical storms.

      ii. Outside of scheduled site business hours.

   b. If no required visual observations (inspections) are collected due to these exceptions, Risk Level 1 dischargers shall include an explanation in their SWPPP and in the Annual Report documenting why the visual observations (inspections) were not conducted.

5. **Risk Level 1 – Monitoring Methods**

   Risk Level 1 dischargers shall include a description of the visual observation locations, visual observation procedures, and visual observation follow-up and tracking procedures in the CSMP.

6. **Risk Level 1 – Non-Storm Water Discharge Monitoring Requirements**

   a. Visual Monitoring Requirements:

      i. Risk Level 1 dischargers shall visually observe (inspect) each drainage area for the presence of (or indications of prior) unauthorized and authorized non-storm water discharges and their sources.

      ii. Risk Level 1 dischargers shall conduct one visual observation (inspection) quarterly in each of the following periods: January-March, April-June, July-September, and October-December. Visual observation (inspections) are only required during daylight hours (sunrise to sunset).

      iii. Risk Level 1 dischargers shall ensure that visual observations (inspections) document the presence or evidence of any non-storm water discharge (authorized or unauthorized), pollutant characteristics (floating and suspended material, sheen, discoloration, turbidity, odor, etc.), and source. Risk Level 1 dischargers shall maintain on-site records indicating the personnel performing the visual observation (inspections), the dates and approximate time each drainage area and non-storm water discharge was observed, and the response taken to eliminate unauthorized non-storm water discharges and to reduce or prevent pollutants from contacting non-storm water discharges.

7. **Risk Level 1 – Non-Visible Pollutant Monitoring Requirements**

   a. Risk Level 1 dischargers shall collect one or more samples during any breach, malfunction, leakage, or spill observed during a visual inspection which could result in the discharge of pollutants to surface waters that would not be visually detectable in storm water.

   b. Risk Level 1 dischargers shall ensure that water samples are large enough to characterize the site conditions.

   c. Risk Level 1 dischargers shall collect samples at all discharge locations that can be safely accessed.

   d. Risk Level 1 dischargers shall collect samples during the first two hours of discharge from rain events that occur during business hours and which generate runoff.

   e. Risk Level 1 dischargers shall analyze samples for all non-visible pollutant parameters (if applicable) - parameters indicating the

presence of pollutants identified in the pollutant source assessment required (Risk Level 1 dischargers shall modify their CSMPs to address these additional parameters in accordance with any updated SWPPP pollutant source assessment).

f. Risk Level 1 dischargers shall collect a sample of storm water that has not come in contact with the disturbed soil or the materials stored or used on-site (uncontaminated sample) for comparison with the discharge sample.

g. Risk Level 1 dischargers shall compare the uncontaminated sample to the samples of discharge using field analysis or through laboratory analysis.[2]

h. Risk Level 1 dischargers shall keep all field /or analytical data in the SWPPP document.

8. **Risk Level 1 – Particle Size Analysis for Project Risk Justification**

Risk Level 1 dischargers justifying an alternative project risk shall report a soil particle size analysis used to determine the RUSLE K-Factor. ASTM D-422 (Standard Test Method for Particle-Size Analysis of Soils), as revised, shall be used to determine the percentages of sand, very fine sand, silt, and clay on the site.

9. **Risk Level 1 – Records**

Risk Level 1 dischargers shall retain records of all storm water monitoring information and copies of all reports (including Annual Reports) for a period of at least three years. Risk Level 1 dischargers shall retain all records on-site while construction is ongoing. These records include:

a. The date, place, time of facility inspections, sampling, visual observation (inspections), and/or measurements, including precipitation.

b. The individual(s) who performed the facility inspections, sampling, visual observation (inspections), and or measurements.

c. The date and approximate time of analyses.

d. The individual(s) who performed the analyses.

[2] For laboratory analysis, all sampling, sample preservation, and analyses must be conducted according to test procedures under 40 CFR Part 136. Field discharge samples shall be collected and analyzed according to the specifications of the manufacturer of the sampling devices employed.

e. A summary of all analytical results from the last three years, the method detection limits and reporting units, and the analytical techniques or methods used.

f. Rain gauge readings from site inspections.

g. Quality assurance/quality control records and results.

h. Non-storm water discharge inspections and visual observation (inspections) and storm water discharge visual observation records (see Sections I.3 and I.6 above).

i. Visual observation and sample collection exception records (see Section I.4 above).

j. The records of any corrective actions and follow-up activities that resulted from analytical results, visual observation (inspections), or inspections.

ATTACHMENT D
RISK LEVEL 2 REQUIREMENTS

A. Effluent Standards

[These requirements are the same as those in the General Permit order.]

1. Narrative – Risk Level 2 dischargers shall comply with the narrative effluent standards listed below:

   a. Storm water discharges and authorized non-storm water discharges regulated by this General Permit shall not contain a hazardous substance equal to or in excess of reportable quantities established in 40 C.F.R. §§ 117.3 and 302.4, unless a separate NPDES Permit has been issued to regulate those discharges.

   b. Dischargers shall minimize or prevent pollutants in storm water discharges and authorized non-storm water discharges through the use of controls, structures, and management practices that achieve BAT for toxic and non-conventional pollutants and BCT for conventional pollutants.

2. Numeric – Risk level 2 dischargers are subject to a pH NAL of 6.5-8.5, and a turbidity NAL of 250 NTU.

B. Good Site Management "Housekeeping"

1. Risk Level 2 dischargers shall implement good site management (i.e., "housekeeping") measures for construction materials that could potentially be a threat to water quality if discharged. At a minimum, Risk Level 2 dischargers shall implement the following good housekeeping measures:

   a. Conduct an inventory of the products used and/or expected to be used and the end products that are produced and/or expected to be produced. This does not include materials and equipment that are designed to be outdoors and exposed to environmental conditions (i.e. poles, equipment pads, cabinets, conductors, insulators, bricks, etc.).

   b. Cover and berm loose stockpiled construction materials that are not actively being used (i.e. soil, spoils, aggregate, fly-ash, stucco, hydrated lime, etc.).

   c. Store chemicals in watertight containers (with appropriate secondary containment to prevent any spillage or leakage) or in a storage shed (completely enclosed).

   d. Minimize exposure of construction materials to precipitation. This does not include materials and equipment that are designed to be outdoors and exposed to environmental conditions (i.e. poles, equipment pads, cabinets, conductors, insulators, bricks, etc.).

   e. Implement BMPs to prevent the off-site tracking of loose construction and landscape materials.

2. Risk Level 2 dischargers shall implement good housekeeping measures for waste management, which, at a minimum, shall consist of the following:

   a. Prevent disposal of any rinse or wash waters or materials on impervious or pervious site surfaces or into the storm drain system.

   b. Ensure the containment of sanitation facilities (e.g., portable toilets) to prevent discharges of pollutants to the storm water drainage system or receiving water.

   c. Clean or replace sanitation facilities and inspecting them regularly for leaks and spills.

   d. Cover waste disposal containers at the end of every business day and during a rain event.

   e. Prevent discharges from waste disposal containers to the storm water drainage system or receiving water.

   f. Contain and securely protect stockpiled waste material from wind and rain at all times unless actively being used.

   g. Implement procedures that effectively address hazardous and non-hazardous spills.

   h. Develop a spill response and implementation element of the SWPPP prior to commencement of construction activities. The SWPPP shall require:

      i. Equipment and materials for cleanup of spills shall be available on site and that spills and leaks shall be cleaned up immediately and disposed of properly.

ii. Appropriate spill response personnel are assigned and trained.

i. Ensure the containment of concrete washout areas and other washout areas that may contain additional pollutants so there is no discharge into the underlying soil and onto the surrounding areas.

3. Risk Level 2 dischargers shall implement good housekeeping for vehicle storage and maintenance, which, at a minimum, shall consist of the following:

   a. Prevent oil, grease, or fuel to leak in to the ground, storm drains or surface waters.

   b. Place all equipment or vehicles, which are to be fueled, maintained and stored in a designated area fitted with appropriate BMPs.

   c. Clean leaks immediately and disposing of leaked materials properly.

4. Risk Level 2 dischargers shall implement good housekeeping for landscape materials, which, at a minimum, shall consist of the following:

   a. Contain stockpiled materials such as mulches and topsoil when they are not actively being used.

   b. Contain all fertilizers and other landscape materials when they are not actively being used.

   c. Discontinue the application of any erodible landscape material within 2 days before a forecasted rain event or during periods of precipitation.

   d. Apply erodible landscape material at quantities and application rates according to manufacture recommendations or based on written specifications by knowledgeable and experienced field personnel.

   e. Stack erodible landscape material on pallets and covering or storing such materials when not being used or applied.

5. Risk Level 2 dischargers shall conduct an assessment and create a list of potential pollutant sources and identify any areas of the site where additional BMPs are necessary to reduce or prevent pollutants in storm water discharges and authorized non-storm water discharges. This potential pollutant list shall be kept with the SWPPP and shall identify

all non-visible pollutants which are known, or should be known, to occur on the construction site. At a minimum, when developing BMPs, Risk Level 2 dischargers shall do the following:

   a. Consider the quantity, physical characteristics (e.g., liquid, powder, solid), and locations of each potential pollutant source handled, produced, stored, recycled, or disposed of at the site.

   b. Consider the degree to which pollutants associated with those materials may be exposed to and mobilized by contact with storm water.

   c. Consider the direct and indirect pathways that pollutants may be exposed to storm water or authorized non-storm water discharges. This shall include an assessment of past spills or leaks, non-storm water discharges, and discharges from adjoining areas.

   d. Ensure retention of sampling, visual observation, and inspection records.

   e. Ensure effectiveness of existing BMPs to reduce or prevent pollutants in storm water discharges and authorized non-storm water discharges.

6. Risk Level 2 dischargers shall implement good housekeeping measures on the construction site to control the air deposition of site materials and from site operations. Such particulates can include, but are not limited to, sediment, nutrients, trash, metals, bacteria, oil and grease and organics.

7. **Additional Risk Level 2 Requirement:** Risk Level 2 dischargers shall document all housekeeping BMPs in the SWPPP and REAP(s) in accordance with the nature and phase of the construction project. Construction phases at traditional land development projects include Grading and Land Development Phase, Streets and Utilities, or Vertical Construction for traditional land development projects.

C. Non-Storm Water Management

1. Risk Level 2 dischargers shall implement measures to control all non-storm water discharges during construction.

2. Risk Level 2 dischargers shall wash vehicles in such a manner as to prevent non-storm water discharges to surface waters or MS4 drainage systems.

3. Risk Level 2 dischargers shall clean streets in such a manner as to prevent unauthorized non-storm water discharges from reaching surface water or MS4 drainage systems.

D. Erosion Control

1. Risk Level 2 dischargers shall implement effective wind erosion control.

2. Risk Level 2 dischargers shall provide effective soil cover for inactive[1] areas and all finished slopes, open space, utility backfill, and completed lots.

3. Risk Level 2 dischargers shall limit the use of plastic materials when more sustainable, environmentally friendly alternatives exist. Where plastic materials are deemed necessary, the discharger shall consider the use of plastic materials resistant to solar degradation.

E. Sediment Controls

1. Risk Level 2 dischargers shall establish and maintain effective perimeter controls and stabilize all construction entrances and exits to sufficiently control erosion and sediment discharges from the site.

2. On sites where sediment basins are to be used, Risk Level 2 dischargers shall, at minimum, design sediment basins according to the method provided in CASQA's Construction BMP Guidance Handbook.

3. **Additional Risk Level 2 Requirement:** Risk Level 2 dischargers shall implement appropriate erosion control BMPs (runoff control and soil stabilization) in conjunction with sediment control BMPs for areas under active[2] construction.

4. **Additional Risk Level 2 Requirement:** Risk Level 2 dischargers shall apply linear sediment controls along the toe of the slope, face of the slope, and at the grade breaks of exposed slopes to comply with sheet flow lengths[3] in accordance with Table 1.

Table 1 - Critical Slope/Sheet Flow Length Combinations

Slope Percentage	Sheet flow length not

[1] Inactive areas of construction are areas of construction activity that have been disturbed and are not scheduled to be re-disturbed for at least 14 days.
[2] Active areas of construction are areas undergoing land surface disturbance. This includes construction activity during the preliminary stage, mass grading stage, streets and utilities stage and the vertical construction stage.
[3] Sheet flow length is the length that shallow, low velocity flow travels across a site.

	to exceed
0-25%	20 feet
25-50%	15 feet
Over 50%	10 feet

5. **Additional Risk Level 2 Requirement:** Risk Level 2 dischargers shall ensure that construction activity traffic to and from the project is limited to entrances and exits that employ effective controls to prevent offsite tracking of sediment.

6. **Additional Risk Level 2 Requirement:** Risk Level 2 dischargers shall ensure that all storm drain inlets and perimeter controls, runoff control BMPs, and pollutant controls at entrances and exits (e.g. tire washoff locations) are maintained and protected from activities that reduce their effectiveness.

7. **Additional Risk Level 2 Requirement:** Risk Level 2 dischargers shall inspect on a daily basis all immediate access roads daily. At a minimum daily (when necessary) and prior to any rain event, the discharger shall remove any sediment or other construction activity-related materials that are deposited on the roads (by vacuuming or sweeping).

F. Run-on and Run-off Controls

Risk Level 2 dischargers shall effectively manage all run-on, all runoff within the site and all runoff that discharges off the site. Run-on from off site shall be directed away from all disturbed areas or shall collectively be in compliance with the effluent limitations in this General Permit.

G. Inspection, Maintenance and Repair

1. Risk Level 2 dischargers shall ensure that all inspection, maintenance repair and sampling activities at the project location shall be performed or supervised by a Qualified SWPPP Practitioner (QSP) representing the discharger. The QSP may delegate any or all of these activities to an employee appropriately trained to do the task(s).

2. Risk Level 2 dischargers shall perform weekly inspections and observations, and at least once each 24-hour period during extended storm events, to identify and record BMPs that need maintenance to operate effectively, that have failed, or that could fail to operate as intended. Inspectors shall be the QSP or be trained by the QSP.

3. Upon identifying failures or other shortcomings, as directed by the QSP, Risk Level 2 dischargers shall begin implementing repairs or

design changes to BMPs within 72 hours of identification and complete the changes as soon as possible.

4. For each inspection required, Risk Level 2 dischargers shall complete an inspection checklist, using a form provided by the State Water Board or Regional Water Board or in an alternative format.

5. Risk Level 2 dischargers shall ensure that checklists shall remain onsite with the SWPPP and at a minimum, shall include:

   a. Inspection date and date the inspection report was written.

   b. Weather information, including presence or absence of precipitation, estimate of beginning of qualifying storm event, duration of event, time elapsed since last storm, and approximate amount of rainfall in inches.

   c. Site information, including stage of construction, activities completed, and approximate area of the site exposed.

   d. A description of any BMPs evaluated and any deficiencies noted.

   e. If the construction site is safely accessible during inclement weather, list the observations of all BMPs: erosion controls, sediment controls, chemical and waste controls, and non-storm water controls. Otherwise, list the results of visual inspections at all relevant outfalls, discharge points, downstream locations and any projected maintenance activities.

   f. Report the presence of noticeable odors or of any visible sheen on the surface of any discharges.

   g. Any corrective actions required, including any necessary changes to the SWPPP and the associated implementation dates.

   h. Photographs taken during the inspection, if any.

   i. Inspector's name, title, and signature.

H. Rain Event Action Plan

1. **Additional Risk Level 2 Requirement:** The discharger shall ensure a QSP develop a Rain Event Action Plan (REAP) 48 hours prior to any likely precipitation event. A likely precipitation event is any weather pattern that is forecast to have a 50% or greater probability of producing precipitation in the project area. The discharger shall

ensure a QSP obtain a printed copy of precipitation forecast information from the National Weather Service Forecast Office (e.g., by entering the zip code of the project's location at http://www.srh.noaa.gov/forecast).

2. **Additional Risk Level 2 Requirement:** The discharger shall ensure a QSP develop the REAPs for all phases of construction (i.e., Grading and Land Development, Streets and Utilities, Vertical Construction, Final Landscaping and Site Stabilization).

3. **Additional Risk Level 2 Requirement:** The discharger shall ensure a QSP ensure that the REAP include, at a minimum, the following site information:

   a. Site Address
   b. Calculated Risk Level (2 or 3)
   c. Site Storm Water Manager Information including the name, company, and 24-hour emergency telephone number
   d. Erosion and Sediment Control Provider information including the name, company, and 24-hour emergency telephone number
   e. Storm Water Sampling Agent information including the name, company, and 24-hour emergency telephone number

4. **Additional Risk Level 2 Requirement:** The discharger shall ensure a QSP include in the REAP, at a minimum, the following project phase information:

   a. Activities associated with each construction phase
   b. Trades active on the construction site during each construction phase
   c. Trade contractor information
   d. Suggested actions for each project phase

5. **Additional Risk Level 2 Requirement:** The discharger shall ensure a QSP develop additional REAPs for project sites where construction activities are indefinitely halted or postponed (Inactive Construction). At a minimum, Inactive Construction REAPs must include:

   a. Site Address
   b. Calculated Risk Level (2 or 3)
   c. Site Storm Water Manager Information including the name, company, and 24-hour emergency telephone number
   d. Erosion and Sediment Control Provider information including the name, company, and 24-hour emergency telephone number
   e. Storm Water Sampling Agent information including the name, company, and 24-hour emergency telephone number

   f. Trades active on site during Inactive Construction
   g. Trade contractor information
   h. Suggested actions for inactive construction sites

6. **Additional Risk Level 2 Requirement:** The discharger shall ensure a QSP begin implementation and make the REAP available onsite no later than 24 hours prior to the likely precipitation event.

7. **Additional Risk Level 2 Requirement:** The discharger shall ensure a QSP maintain onsite a paper copy of each REAP onsite in compliance with the record retention requirements of the Special Provisions in this General Permit.

I. Risk Level 2 Monitoring and Reporting Requirements

Table 2- Summary of Monitoring Requirements

Risk Level	Visual Inspections					Sample Collection	
	Quarterly Non-storm Water Discharge	Prestorm Event		Daily Storm BMP	Post Storm	Storm Water Discharge	Receiving Water
		Baseline	REAP				
2	X	X	X	X	X	X	

1. Construction Site Monitoring Program Requirements

   a. Pursuant to Water Code Sections 13383 and 13267, all dischargers subject to this General Permit shall develop and implement a written site-specific Construction Site Monitoring Program (CSMP) in accordance with the requirements of this Section. The CSMP shall include all monitoring procedures and instructions, location maps, forms, and checklists as required in this section. The CSMP shall be developed prior to the commencement of construction activities, and revised as necessary to reflect project revisions. The CSMP shall be a part of the Storm Water Pollution Prevention Plan (SWPPP), included as an appendix or separate SWPPP chapter.

   b. Existing dischargers registered under the State Water Board Order No. 99-08-DWQ shall make and implement necessary revisions to their Monitoring Program to reflect the changes in this General Permit in a timely manner, but no later than July 1, 2010. Existing dischargers shall continue to implement their existing Monitoring Programs in compliance with State Water Board Order No. 99-08-DWQ until the necessary revisions are completed according to the schedule above.

   c. When a change of ownership occurs for all or any portion of the construction site prior to completion or final stabilization, the new discharger shall comply with these requirements as of the date the ownership change occurs.

2. **Objectives**

   The CSMP shall be developed and implemented to address the following objectives:

a. To demonstrate that the site is in compliance with the Discharge Prohibitions and applicable Numeric Action Levels (NALs)/Numeric Effluent Limitations (NELs) of this General Permit.

b. To determine whether non-visible pollutants are present at the construction site and are causing or contributing to exceedances of water quality objectives.

c. To determine whether immediate corrective actions, additional Best Management Practice (BMP) implementation, or SWPPP revisions are necessary to reduce pollutants in storm water discharges and authorized non-storm water discharges.

d. To determine whether BMPs included in the SWPPP/Rain Event Action Plan (REAP) are effective in preventing or reducing pollutants in storm water discharges and authorized non-storm water discharges.

3. **Risk Level 2 – Visual Monitoring (Inspection) Requirements for Qualifying Rain Events**

a. Risk Level 2 dischargers shall visually observe (inspect) storm water discharges at all discharge locations within two business days (48 hours) after each qualifying rain event.

b. Risk Level 2 dischargers shall visually observe (inspect) the discharge of stored or contained storm water that is derived from and discharged subsequent to a qualifying rain event producing precipitation of ½ inch or more at the time of discharge. Stored or contained storm water that will likely discharge after operating hours due to anticipated precipitation shall be observed prior to the discharge during operating hours.

c. Risk Level 2 dischargers shall conduct visual observations (inspections) during business hours only.

d. Risk Level 2 dischargers shall record the time, date and rain gauge reading of all qualifying rain events.

e. Within 2 business days (48 hours) prior to each qualifying rain event, Risk Level 2 dischargers shall visually observe (inspect):

i. all storm water drainage areas to identify any spills, leaks, or uncontrolled pollutant sources. If needed, the discharger shall implement appropriate corrective actions.

ii. all BMPs to identify whether they have been properly implemented in accordance with the SWPPP/REAP. If needed, the discharger shall implement appropriate corrective actions.

iii. any storm water storage and containment areas to detect leaks and ensure maintenance of adequate freeboard.

f. For the visual observations (inspections) described in c.i and c.iii above, Risk Level 2 dischargers shall observe the presence or absence of floating and suspended materials, a sheen on the surface, discolorations, turbidity, odors, and source(s) of any observed pollutants.

g. Within two business days (48 hours) after each qualifying rain event, Risk Level 2 dischargers shall conduct post rain event visual observations (inspections) to (1) identify whether BMPs were adequately designed, implemented, and effective, and (2) identify additional BMPs and revise the SWPPP accordingly.

h. Risk Level 2 dischargers shall maintain on-site records of all visual observations (inspections), personnel performing the observations, observation dates, weather conditions, locations observed, and corrective actions taken in response to the observations.

4. **Risk Level 2 – Water Quality Sampling and Analysis**

a. Risk Level 2 dischargers shall collect storm water grab samples from sampling locations, as defined in Section I.5. The storm water grab sample(s) obtained shall be representative of the flow and characteristics of the discharge.

b. At minimum, Risk Level 2 dischargers shall collect 3 samples per day of the qualifying event.

c. Risk Level 2 dischargers shall ensure that the grab samples collected of stored or contained storm water are from discharges subsequent to a qualifying rain event (producing precipitation of ½ inch or more at the time of discharge).

Storm Water Effluent Monitoring Requirements

d. Risk Level 2 dischargers shall analyze their effluent samples for:

i. pH and turbidity.

ii. Any additional parameters for which monitoring is required by the Regional Water Board.

5. **Risk Level 2 – Storm Water Discharge Water Quality Sampling Locations**

Effluent Sampling Locations

a. Risk Level 2 dischargers shall perform sampling and analysis of storm water discharges to characterize discharges associated with construction activity from the entire project disturbed area.

b. Risk Level 2 dischargers shall collect effluent samples at all discharge points where storm water is discharged off-site.

c. Risk Level 2 dischargers shall ensure that storm water discharge collected and observed represent[4] the effluent in each drainage area based on visual observation of the water and upstream conditions.

d. Risk Level 2 dischargers shall monitor and report site run-on from surrounding areas if there is reason to believe run-on may contribute to an exceedance of NALs or NELs.

e. Risk Level 2 dischargers who deploy an ATS on their site, or a portion on their site, shall collect ATS effluent samples and measurements from the discharge pipe or another location representative of the nature of the discharge.

f. Risk Level 2 dischargers shall select analytical test methods from the list provided in Table 3 below.

g. All storm water sample collection preservation and handling shall be conducted in accordance with Section I.7 "Storm Water Sample Collection and Handling Instructions" below.

6. **Risk Level 2 – Visual Observation and Sample Collection Exemptions**

a. Risk Level 2 dischargers shall be prepared to collect samples and conduct visual observation (inspections) until the minimum requirements of Sections I.3 and I.4 above are completed. Risk

[4] For example, if there has been concrete work recently in an area, or drywall scrap is exposed to the rain, a pH sample shall be taken of drainage from the relevant work area. Similarly, if sediment laden water is flowing through some parts of a silt fence, samples shall be taken of the sediment-laden water even if most water flowing through the fence is clear.

Level 2 dischargers are not required to physically collect samples or conduct visual observation (inspections) under the following conditions:

i. During dangerous weather conditions such as flooding and electrical storms.

ii. Outside of scheduled site business hours.

b. If no required samples or visual observation (inspections) are collected due to these exceptions, Risk Level 2 dischargers shall include an explanation in their SWPPP and in the Annual Report documenting why the sampling or visual observation (inspections) were not conducted.

7. **Risk Level 2 – Storm Water Sample Collection and Handling Instructions**

a. Risk Level 2 dischargers shall refer to Table 3 below for test methods, detection limits, and reporting units.

b. Risk Level 2 dischargers shall ensure that testing laboratories will receive samples within 48 hours of the physical sampling (unless otherwise required by the laboratory), and shall use only the sample containers provided by the laboratory to collect and store samples.

c. Risk Level 2 dischargers shall designate and train personnel to collect, maintain, and ship samples in accordance with the Surface Water Ambient Monitoring Program's (SWAMP) 2008 Quality Assurance Program Plan (QAPrP).[5]

8. **Risk Level 2 – Monitoring Methods**

a. Risk Level 2 dischargers shall include a description of the following items in the CSMP:

i. Visual observation locations, visual observation procedures, and visual observation follow-up and tracking procedures.

ii. Sampling locations, and sample collection and handling procedures. This shall include detailed procedures for sample

[5] Additional information regarding SWAMP's QAPrP and QAMP can be found at http://www.waterboards.ca.gov/water_issues/programs/swamp/.
QAPrP:http://www.waterboards.ca.gov/water_issues/programs/swamp/docs/qapp/swamp_qapp_master090108a.pdf.
QAMP: http://www.waterboards.ca.gov/water_issues/programs/swamp/qamp.shtml.

collection, storage, preservation, and shipping to the testing lab to assure that consistent quality control and quality assurance is maintained. Dischargers shall attach to the monitoring program an example Chain of Custody form used when handling and shipping samples.

iii. Identification of the analytical methods and related method detection limits (if applicable) for each parameter required in Section I.4 above.

b. Risk Level 2 dischargers shall ensure that all sampling and sample preservation are in accordance with the current edition of "Standard Methods for the Examination of Water and Wastewater" (American Public Health Association). All monitoring instruments and equipment (including a discharger's own field instruments for measuring pH and turbidity) should be calibrated and maintained in accordance with manufacturers' specifications to ensure accurate measurements. Risk Level 2 dischargers shall ensure that all laboratory analyses are conducted according to test procedures under 40 CFR Part 136, unless other test procedures have been specified in this General Permit or by the Regional Water Board. With the exception of field analysis conducted by the discharger for turbidity and pH, all analyses should be sent to and conducted at a laboratory certified for such analyses by the State Department of Health Services. Risk Level 2 dischargers shall conduct their own field analysis of pH and may conduct their own field analysis of turbidity if the discharger has sufficient capability (qualified and trained employees, properly calibrated and maintained field instruments, etc.) to adequately perform the field analysis.

9. **Risk Level 2 – Analytical Methods**

a. Risk Level 2 dischargers shall refer to Table 3 below for test methods, detection limits, and reporting units.

b. **pH**: Risk Level 2 dischargers shall perform pH analysis on-site with a calibrated pH meter or a pH test kit. Risk Level 2 dischargers shall record pH monitoring results on paper and retain these records in accordance with Section I.14, below.

c. **Turbidity**: Risk Level 2 dischargers shall perform turbidity analysis using a calibrated turbidity meter (turbidimeter), either on-site or at an accredited lab. Acceptable test methods include Standard Method 2130 or USEPA Method 180.1. The results will be recorded in the site log book in Nephelometric Turbidity Units (NTU).

10. **Risk Level 2 - Non-Storm Water Discharge Monitoring Requirements**

a. Visual Monitoring Requirements:

i. Risk Level 2 dischargers shall visually observe (inspect) each drainage area for the presence of (or indications of prior) unauthorized and authorized non-storm water discharges and their sources.

ii. Risk Level 2 dischargers shall conduct one visual observation (inspection) quarterly in each of the following periods: January-March, April-June, July-September, and October-December. Visual observation (inspections) are only required during daylight hours (sunrise to sunset).

iii. Risk Level 2 dischargers shall ensure that visual observations (inspections) document the presence or evidence of any non-storm water discharge (authorized or unauthorized), pollutant characteristics (floating and suspended material, sheen, discoloration, turbidity, odor, etc.), and source. Risk Level 2 dischargers shall maintain on-site records indicating the personnel performing the visual observation (inspections), the dates and approximate time each drainage area and non-storm water discharge was observed, and the response taken to eliminate unauthorized non-storm water discharges and to reduce or prevent pollutants from contacting non-storm water discharges.

b. Effluent Sampling Locations:

i. Risk Level 2 dischargers shall sample effluent at all discharge points where non-storm water and/or authorized non-storm water is discharged off-site.

ii. Risk Level 2 dischargers shall send all non-storm water sample analyses to a laboratory certified for such analyses by the State Department of Health Services.

iii. Risk Level 2 dischargers shall monitor and report run-on from surrounding areas if there is reason to believe run-on may contribute to an exceedance of NALs.

11. **Risk Level 2 – Non-Visible Pollutant Monitoring Requirements**

a. Risk Level 2 dischargers shall collect one or more samples during any breach, malfunction, leakage, or spill observed during a visual inspection which could result in the discharge of pollutants to surface waters that would not be visually detectable in storm water.

b. Risk Level 2 dischargers shall ensure that water samples are large enough to characterize the site conditions.

c. Risk Level 2 dischargers shall collect samples at all discharge locations that can be safely accessed.

d. Risk Level 2 dischargers shall collect samples during the first two hours of discharge from rain events that occur during business hours and which generate runoff.

e. Risk Level 2 dischargers shall analyze samples for all non-visible pollutant parameters (if applicable) - parameters indicating the presence of pollutants identified in the pollutant source assessment required (Risk Level 2 dischargers shall modify their CSMPs to address these additional parameters in accordance with any updated SWPPP pollutant source assessment).

f. Risk Level 2 dischargers shall collect a sample of storm water that has not come in contact with the disturbed soil or the materials stored or used on-site (uncontaminated sample) for comparison with the discharge sample.

g. Risk Level 2 dischargers shall compare the uncontaminated sample to the samples of discharge using field analysis or through laboratory analysis.[6]

h. Risk Level 2 dischargers shall keep all field /or analytical data in the SWPPP document.

12. **Risk Level 2 – Watershed Monitoring Option**

Risk Level 2 dischargers who are part of a qualified regional watershed-based monitoring program may be eligible for relief from the requirements in Sections I.5. The Regional Water Board may approve proposals to substitute an acceptable watershed-based monitoring program by determining if the watershed-based monitoring program

[6] For laboratory analysis, all sampling, sample preservation, and analyses must be conducted according to test procedures under 40 CFR Part 136. Field discharge samples shall be collected and analyzed according to the specifications of the manufacturer of the sampling devices employed.

will provide substantially similar monitoring information in evaluating discharger compliance with the requirements of this General Permit.

13. **Risk Level 2 – Particle Size Analysis for Project Risk Justification**

Risk Level 2 dischargers justifying an alternative project risk shall report a soil particle size analysis used to determine the RUSLE K-Factor. ASTM D-422 (Standard Test Method for Particle-Size Analysis of Soils), as revised, shall be used to determine the percentages of sand, very fine sand, silt, and clay on the site.

14. **Risk Level 2 – Records**

Risk Level 2 dischargers shall retain records of all storm water monitoring information and copies of all reports (including Annual Reports) for a period of at least three years. Risk Level 2 dischargers shall retain all records on-site while construction is ongoing. These records include:

a. The date, place, time of facility inspections, sampling, visual observation (inspections), and/or measurements, including precipitation.

b. The individual(s) who performed the facility inspections, sampling, visual observation (inspections), and or measurements.

c. The date and approximate time of analyses.

d. The individual(s) who performed the analyses.

e. A summary of all analytical results from the last three years, the method detection limits and reporting units, the analytical techniques or methods used, and the chain of custody forms.

f. Rain gauge readings from site inspections;

g. Quality assurance/quality control records and results.

h. Non-storm water discharge inspections and visual observation (inspections) and storm water discharge visual observation records (see Sections I.3 and I.10 above).

i. Visual observation and sample collection exception records (see Section I.6 above).

j. The records of any corrective actions and follow-up activities that resulted from analytical results, visual observation (inspections), or inspections.

15. **Risk Level 2 – NAL Exceedance Report**

a. In the event that any effluent sample exceeds an applicable NAL, Risk Level 2 dischargers shall electronically submit all storm event sampling results to the State Water Board no later than 10 days after the conclusion of the storm event. The Regional Boards have the authority to require the submittal of an NAL Exceedance Report.

b. Risk Level 2 dischargers shall certify each NAL Exceedance Report in accordance with the Special Provisions for Construction Activity.

c. Risk Level 2 dischargers shall retain an electronic or paper copy of each NAL Exceedance Report for a minimum of three years after the date the annual report is filed.

d. Risk Level 2 dischargers shall include in the NAL Exceedance Report:

i. The analytical method(s), method reporting unit(s), and method detection limit(s) of each analytical parameter (analytical results that are less than the method detection limit shall be reported as "less than the method detection limit").

ii. The date, place, time of sampling, visual observation (inspections), and/or measurements, including precipitation.

iii. A description of the current BMPs associated with the effluent sample that exceeded the NAL and the proposed corrective actions taken.

Table 3 – Risk Level 2 Test Methods, Detection Limits, Reporting Units and Applicable NALs/NELs

Parameter	Test Method / Protocol	Discharge Type	Min. Detection Limit	Reporting Units	Numeric Action Level
pH	Field test with calibrated portable instrument	Risk Level 2 Discharges	0.2	pH units	lower NAL = 6.5 upper NAL = 8.5
Turbidity	EPA 0180.1 and/or field test with calibrated portable instrument	Risk Level 2 Discharges other than ATS	1	NTU	250 NTU
		For ATS discharges	1	NTU	N/A

Version 8/10/2009

Risk Determination Worksheet

Step 1 Determine Sediment Risk via one of the options listed:
1. GIS Map Method - EPA Rainfall Erosivity Calculator & GIS map
2. Individual Method - EPA Rainfall Erosivity Calculator & Individual Data

Step 2 Determine Receiving Water Risk via one of the options listed:
1. GIS map of Sediment Sensitive Watersheds provided (in development)
2. List of Sediment Sensitive Watersheds provided

Step 3 Determine Combined Risk Level

	A	B	C
1	**Sediment Risk Factor Worksheet**		**Entry**
2	**A) R Factor**		
3	Analyses of data indicated that when factors other than rainfall are held constant, soil loss is directly proportional to a rainfall factor composed of total storm kinetic energy (E) times the maximum 30-min intensity (I30) (Wischmeier and Smith, 1958). The numerical value of R is the average annual sum of EI30 for storm events during a rainfall record of at least 22 years. "Isoerodent" maps were developed based on R values calculated for more than 1000 locations in the Western U.S. Refer to the link below to determine the R factor for the project site.		
4	http://[illegible]		
5		**R Factor Value**	0
6	**B) K Factor (weighted average, by area, for all site soils)**		
7	The soil-erodibility factor K represents: (1) susceptibility of soil or surface material to erosion, (2) transportability of the sediment, and (3) the amount and rate of runoff given a particular rainfall input, as measured under a standard condition. Fine-textured soils that are high in clay have low K values (about 0.05 to 0.15) because the particles are resistant to detachment. Coarse-textured soils, such as sandy soils, also have low K values (about 0.05 to 0.2) because of high infiltration resulting in low runoff even though these particles are easily detached. Medium-textured soils, such as a silt loam, have moderate K values (about 0.25 to 0.45) because they are moderately susceptible to particle detachment and they produce runoff at moderate rates. Soils having a high silt content are especially susceptible to erosion and have high K values, which can exceed 0.45 and can be as large as 0.65. Silt-size particles are easily detached and tend to crust, producing high rates and large volumes of runoff. Use Site-specific data must be submitted.		
8	Site-specific K [illegible]		
9		**K Factor Value**	0
10	**C) LS Factor (weighted average, by area, for all slopes)**		
11	The effect of topography on erosion is accounted for by the LS factor, which combines the effects of a hillslope-length factor, L, and a hillslope-gradient factor, S. Generally speaking, as hillslope length and/or hillslope gradient increase, soil loss increases. As hillslope length increases, total soil loss and soil loss per unit area increase due to the progressive accumulation of runoff in the downslope direction. As the hillslope gradient increases, the velocity and erosivity of runoff increases. Use the LS table located in separate tab of this spreadsheet to determine LS factors. Estimate the weighted LS for the site prior to construction.		
12	LS Table		
13		**LS Factor Value**	0
14			
15		**Watershed Erosion Estimate (=RxKxLS) in tons/acre**	0
16		**Site Sediment Risk Factor**	**Low**
17		Low Sediment Risk: < 15 tons/acre	
18		Medium Sediment Risk: >=15 and <75 tons/acre	
19		High Sediment Risk: >= 75 tons/acre	
20			

For the GIS Map Method, the R factor for the project is calculated using the online calculator at (see cell to right). The product of K and LS are shown on the figure below. To determine soil loss in tons per acre, multiply the R factor times the value for K times LS from the map.

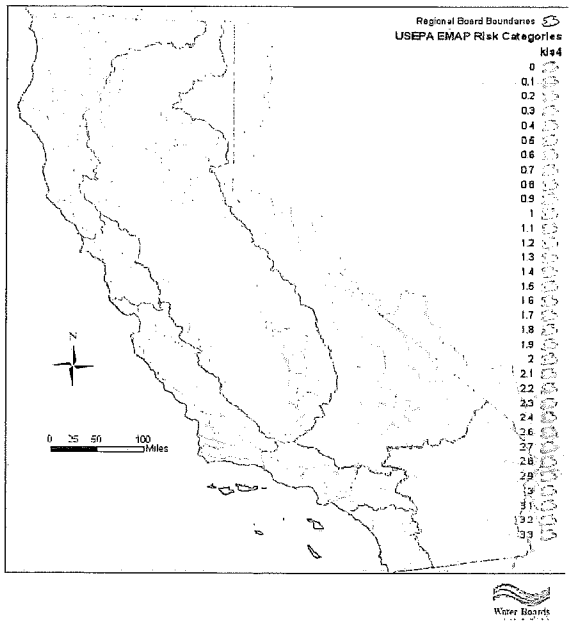

State Water Resources Control Board, January 15, 2009

Receiving Water (RW) Risk Factor Worksheet	Entry	Score
A. Watershed Characteristics	yes/no	
A.1. Does the disturbed area discharge (either directly or indirectly) to a **303(d)-listed waterbody impaired by sediment?** For help with impaired waterbodies please check the attached worksheet or visit the link below: 2006 Approved Sediment-impaired WBs Worksheet http://www.waterboards.ca.gov/water_issues/programs/tmdl/303d_lists2006_epa.shtml OR	Yes	High
A.2. Does the disturbed area discharge to a waterbody with designated beneficial uses of SPAWN & COLD & MIGRATORY? http://www.ibis.geo.ucdavis.edu/bestuse/asp/wbquse.asp		

Combined Risk Level Matrix

Receiving Water Risk	Sediment Risk: Low	Medium	High
Low	Level 1	Level 2	
High	Level 2		Level 3

Project Sediment Risk: [illegible]
Project RW Risk: [illegible]
Project Combined Risk: Level 2

Soil Erodibility Factor (K)

The K factor can be determined by using the nomograph method, which requires that a particle size analysis (ASTM D-422) be done to determine the percentages of sand, very fine sand, silt and clay. Use the figure below to determine appropriate K value.

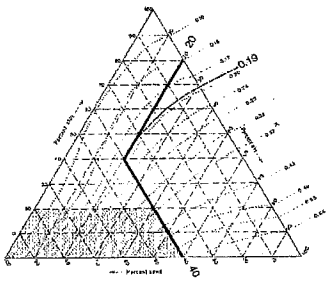

Erickson triangular nomograph used to estimate soil erodibility (K) factor.
This figure shows is the USDA nomograph used to determine the K factor for a soil, based on its texture (% silt plus very fine sand, % sand, % organic matter, soil structure, and permeability). *Nomograph from Erickson 1977 as referenced in Goldman et. al., 1986.*

Sheet Flow Length (ft)	0.2	0.5	1.0	2.0	3.0	4.0	5.0	6.0	8.0	10.0	12.0	14.0	16.0	20.0	25.0	30.0	40.0	50.0	60.0
<3	0.05	0.07	0.09	0.13	0.17	0.20	0.23	0.26	0.32	0.35	0.36	0.38	0.39	0.41	0.45	0.48	0.53	0.58	0.63
6	0.05	0.07	0.09	0.13	0.17	0.20	0.23	0.26	0.32	0.37	0.41	0.45	0.49	0.56	0.64	0.72	0.85	0.97	1.07
9	0.05	0.07	0.09	0.13	0.17	0.20	0.23	0.26	0.32	0.38	0.45	0.51	0.56	0.67	0.80	0.91	1.13	1.31	1.47
12	0.05	0.07	0.09	0.13	0.17	0.20	0.23	0.26	0.32	0.39	0.47	0.55	0.62	0.76	0.93	1.08	1.37	1.62	1.84
15	0.05	0.07	0.09	0.13	0.17	0.20	0.23	0.26	0.32	0.40	0.49	0.58	0.67	0.84	1.04	1.24	1.59	1.91	2.19
25	0.05	0.07	0.10	0.16	0.21	0.26	0.31	0.36	0.45	0.57	0.71	0.85	0.98	1.24	1.56	1.86	2.41	2.91	3.36
50	0.05	0.08	0.13	0.21	0.30	0.38	0.46	0.54	0.70	0.91	1.15	1.40	1.64	2.10	2.67	3.22	4.24	5.16	5.97
75	0.05	0.08	0.14	0.25	0.36	0.47	0.58	0.69	0.91	1.20	1.54	1.87	2.21	2.86	3.67	4.44	5.89	7.20	8.37
100	0.05	0.09	0.15	0.28	0.41	0.55	0.68	0.82	1.10	1.46	1.88	2.31	2.73	3.57	4.59	5.58	7.44	9.13	10.63
150	0.05	0.09	0.17	0.33	0.50	0.68	0.86	1.05	1.43	1.92	2.51	3.09	3.68	4.85	6.30	7.70	10.35	12.75	14.89
200	0.06	0.10	0.18	0.37	0.57	0.79	1.02	1.25	1.72	2.34	3.07	3.81	4.56	6.04	7.88	9.67	13.07	16.16	18.92
250	0.06	0.10	0.19	0.40	0.64	0.89	1.16	1.43	1.99	2.72	3.60	4.48	5.37	7.16	9.38	11.55	15.67	19.42	22.78
300	0.06	0.10	0.20	0.43	0.69	0.98	1.28	1.60	2.24	3.09	4.09	5.11	6.15	8.23	10.81	13.35	18.17	22.57	26.51
400	0.06	0.11	0.22	0.48	0.80	1.14	1.51	1.90	2.70	3.75	5.01	6.30	7.60	10.24	13.53	16.77	22.95	28.60	33.67
600	0.06	0.12	0.24	0.56	0.98	1.42	1.91	2.43	3.52	4.95	6.67	8.45	10.26	13.94	18.57	23.14	31.89	39.95	47.18
800	0.06	0.12	0.26	0.63	1.10	1.65	2.25	2.89	4.24	6.03	8.17	10.40	12.69	17.35	23.24	29.07	40.29	50.63	59.93
1000	0.06	0.13	0.27	0.69	1.23	1.86	2.55	3.30	4.91	7.02	9.57	12.23	14.96	20.57	27.66	34.71	48.29	60.61	72.15

LS Factors for Construction Sites. *Table from Renard et. al., 1997.*

[illegible]	[illegible]	[illegible]	[illegible]	[illegible]	[illegible]	[illegible]	[illegible]	[illegible]	[illegible]	[illegible]	[illegible]
[illegible]	[illegible]	[illegible]	[illegible]	[illegible]	[illegible]	[illegible]	[illegible]	[illegible]	[illegible]	[illegible]	[illegible]

[illegible]	[illegible]	[illegible]	[illegible]	[illegible]	[illegible]	[illegible]	[illegible]	[illegible]	[illegible]	[illegible]	[illegible]	[illegible]	[illegible]
[illegible]	[illegible]	[illegible]	[illegible]	[illegible]	[illegible]	[illegible]	[illegible]	[illegible]	[illegible]	[illegible]	[illegible]	[illegible]	[illegible]

APPENDIX VI

PROJECT CONSTRUCTION SIGNS

- **Measure R sign will be provided by the City**
- **Construction Sign (City will provide an AutoCAD of the Attached)**

Measure R Local Construction Project Sign

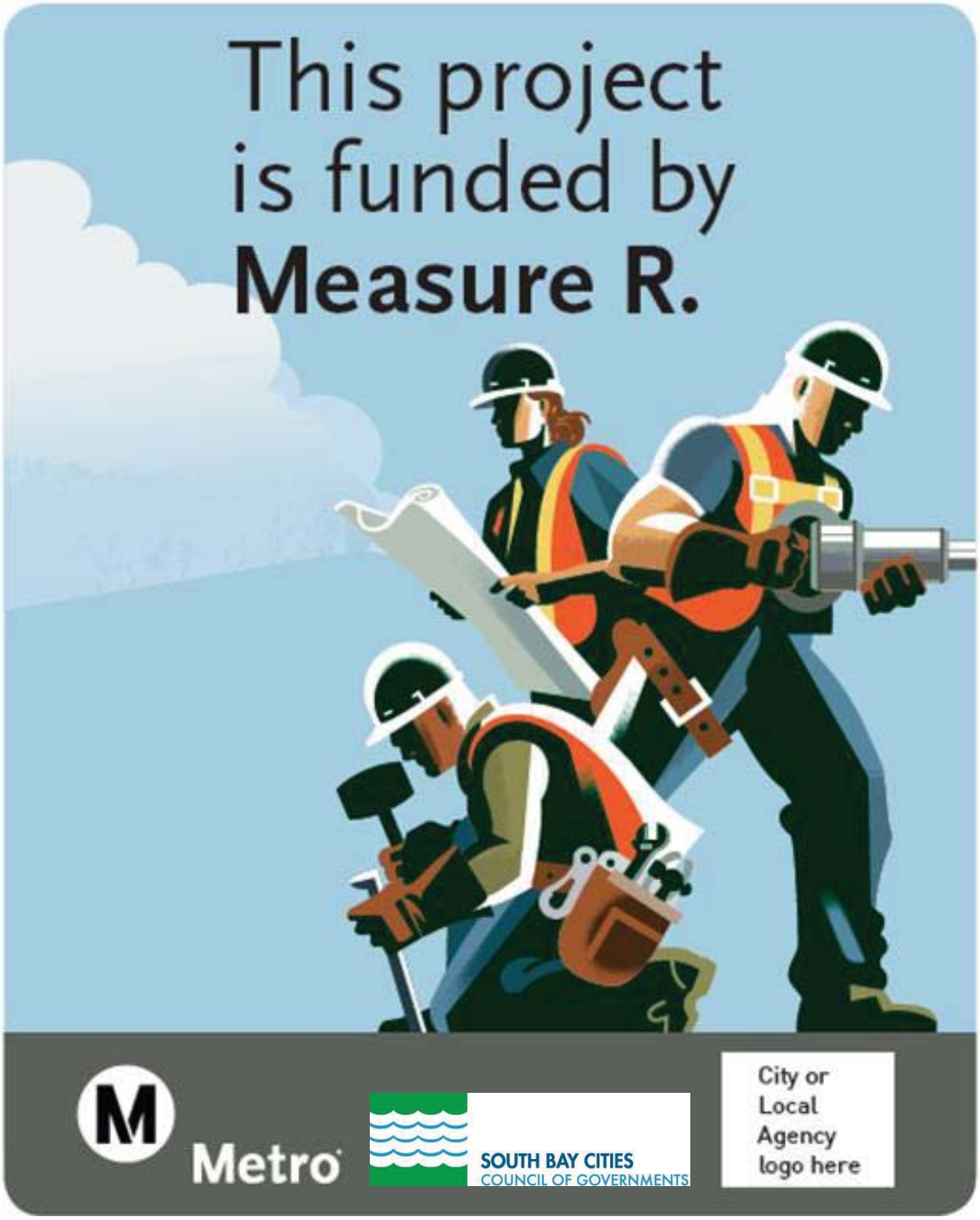

Onsite sign for local projects

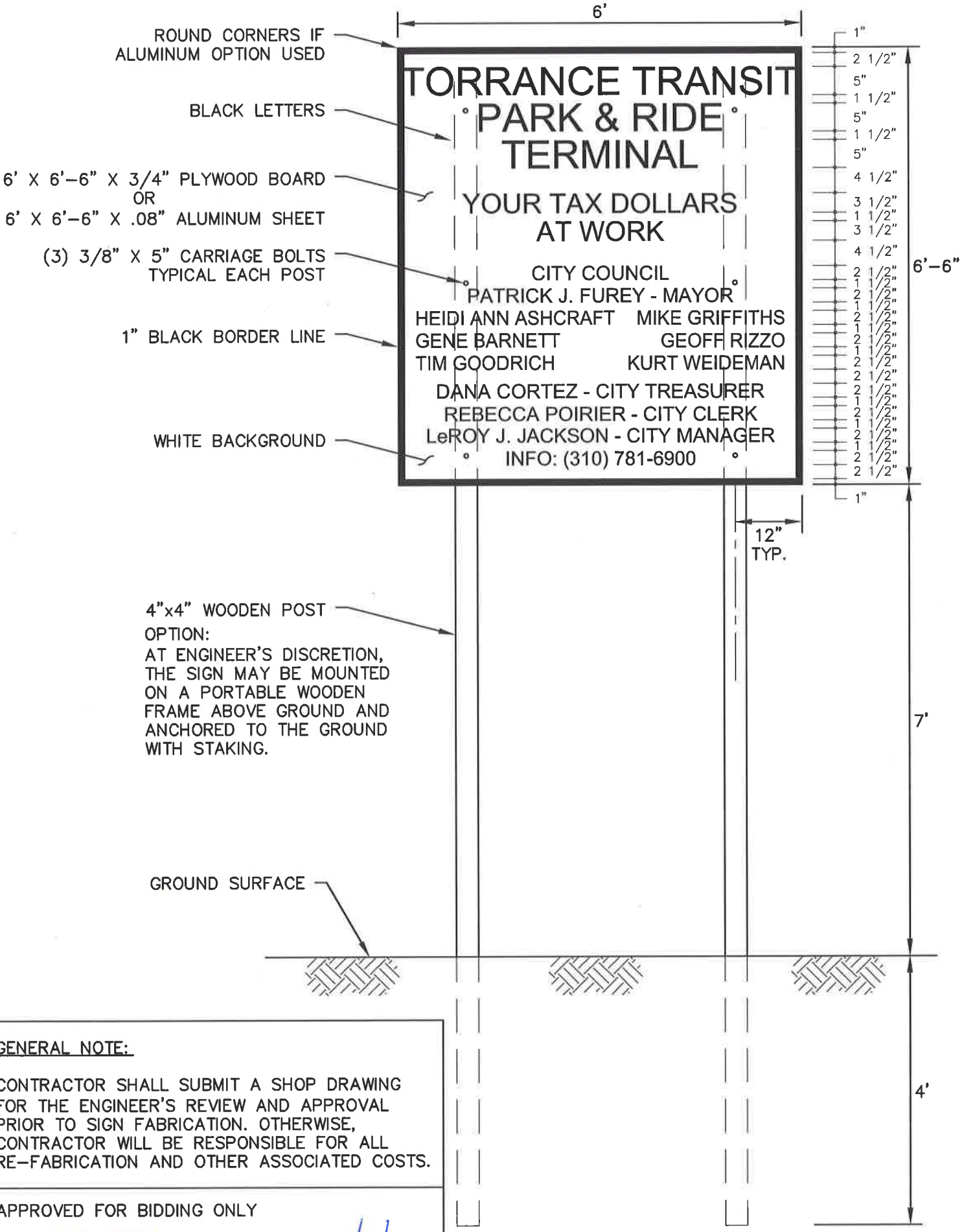

GENERAL NOTE:

CONTRACTOR SHALL SUBMIT A SHOP DRAWING FOR THE ENGINEER'S REVIEW AND APPROVAL PRIOR TO SIGN FABRICATION. OTHERWISE, CONTRACTOR WILL BE RESPONSIBLE FOR ALL RE-FABRICATION AND OTHER ASSOCIATED COSTS.

APPROVED FOR BIDDING ONLY

7/2/2015

CITY ENGINEER DATE

APPENDIX VII

MANUFACTURER'S DRAWINGS

As shown in Project Plans and Specifications