APPENDIX II

CITY OF TORRANCE STANDARD PLANS

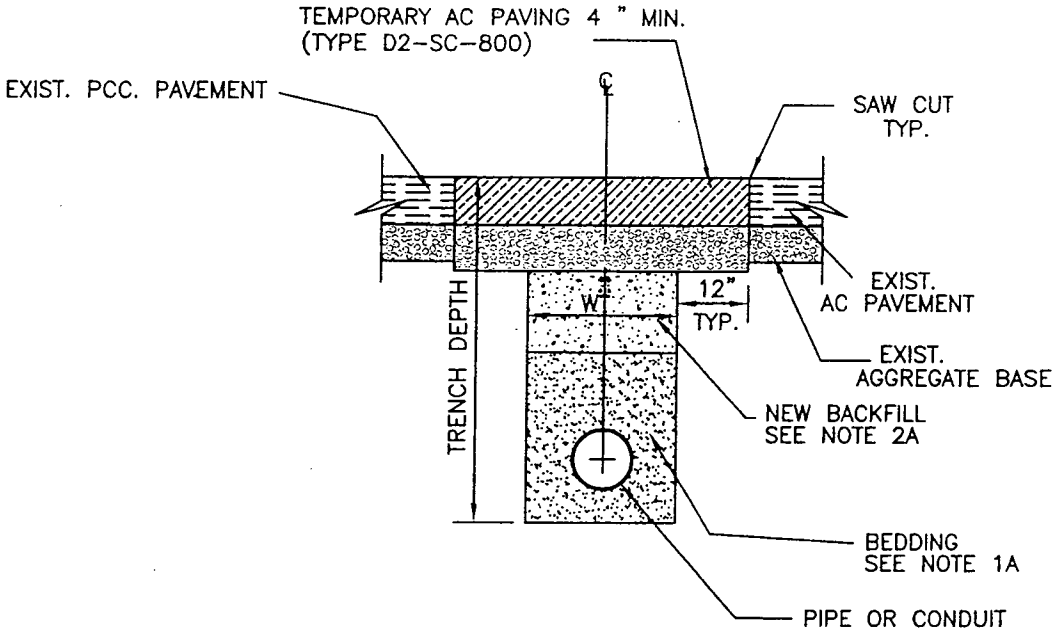

TEMPORARY ASPHALT REPAIR

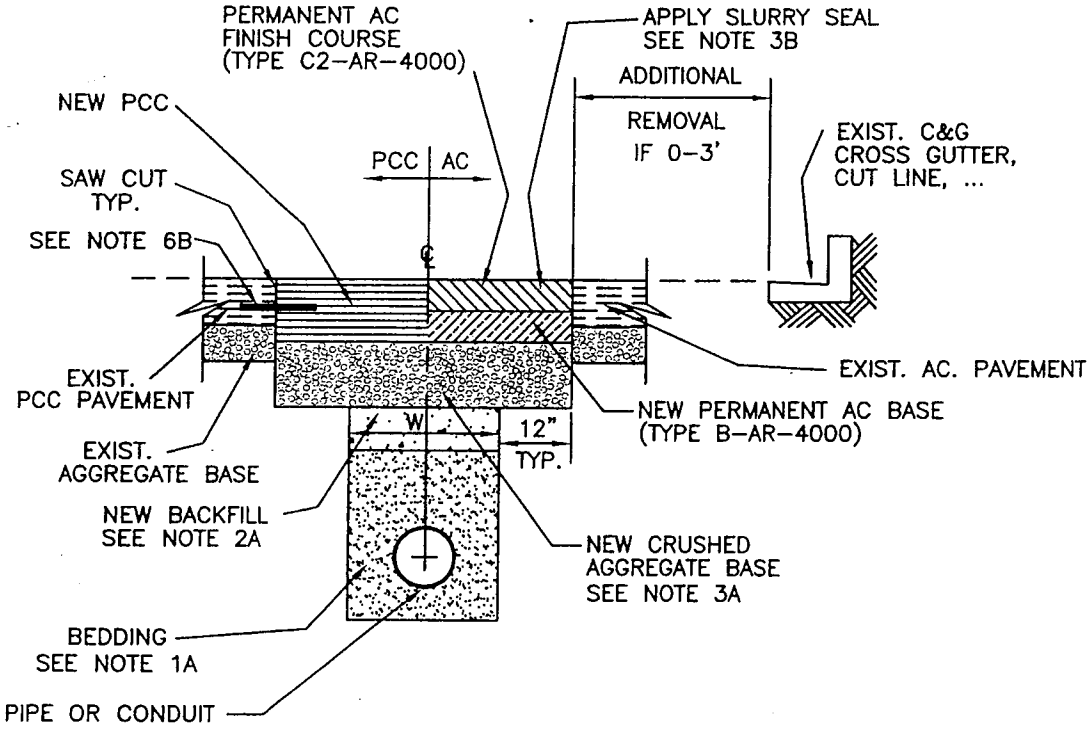

PERMANENT TRENCH REPAIR

TYPICAL TRENCH SECTION WITHIN ROADWAY

(SEE NOTE 8C FOR EXCEPTION)

CITY OF TORRANCE - ENGINEERING DEPARTMENT

DATE ISSUED	TRENCH BACKFILL & PAVEMENT REPAIRS	STANDARD NO.
10 SEP 2002	RICHARD W. BURTT ENGINEERING DIRECTOR R.C.E. NO. 32862 R.T.E. NO. 1538	T116-2
		SHEET 1 OF 4

TT\T116-

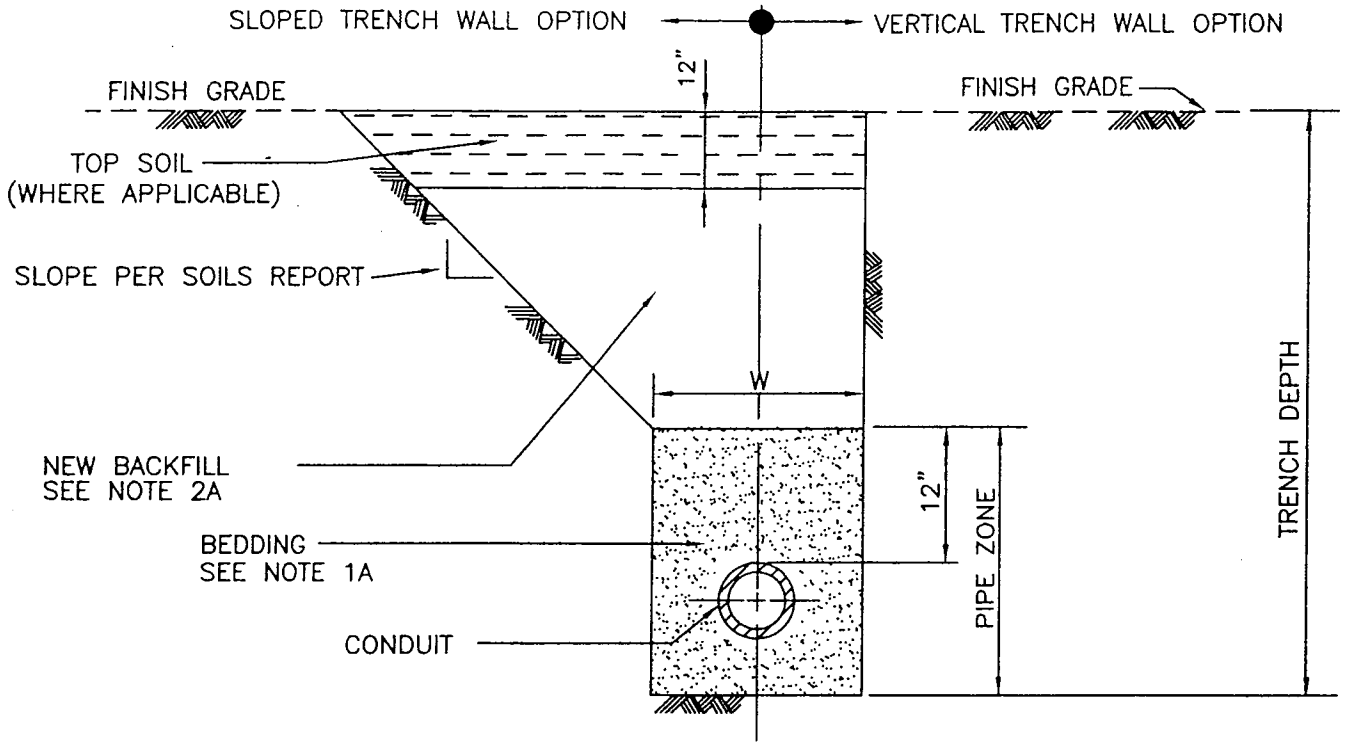

TYPICAL TRENCH SECTION OUTSIDE ROADWAY

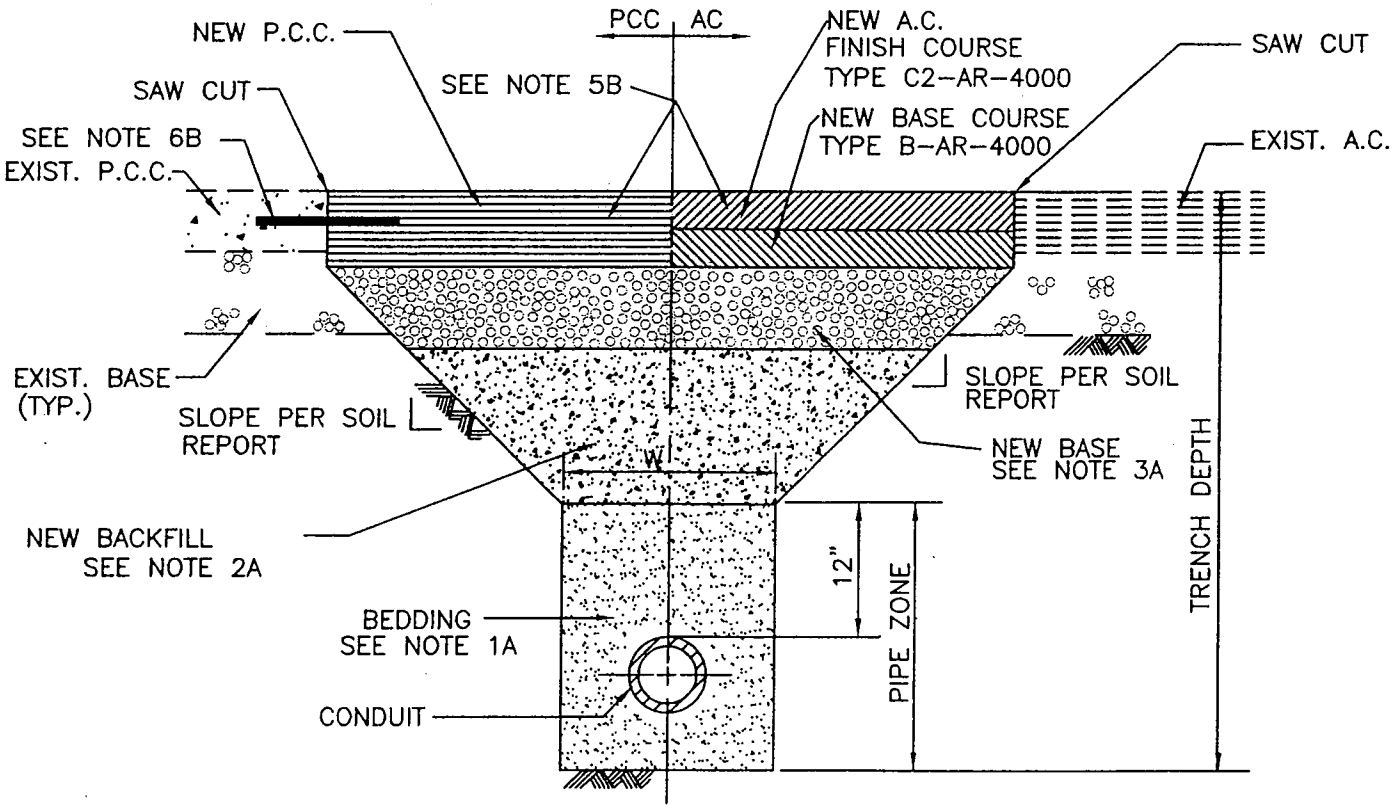

TYPICAL TRENCH SECTION WITHIN ROADWAY
SLOPED TRENCH WALL OPTION

CITY OF TORRANCE - ENGINEERING DEPARTMENT

DATE ISSUED	TRENCH BACKFILL & PAVEMENT REPAIRS	STANDARD NO.
10 SEP 2002	RICHARD W. BURTT ENGINEERING DIRECTOR R.C.E. NO. 32862 R.T.E. NO. 1538	T116-2
		SHEET 2 OF 4

TT\T116

NOTES:

BELOW GROUND:

1A. SEE STD. PLAN NO'S T204, T302, AND T701 FOR BEDDING REQUIREMENTS.

2A. FOR TRENCHES WITH "W" GREATER THAN 2' OR IF TRENCH WALLS ARE SLOPED, BACKFILL SHALL BE CRUSHED AGGREGATE BASE, OR NATIVE OR OTHER EXCAVATION MATERIAL WITH AN SE VALUE OF 30 OR GREATER. BACKFILL MATERIAL SHALL BE DENSIFIED TO A RELATIVE COMPACTION OF 95% IN THE UPPER 3 FEET AND TO 90% BELOW THE UPPER 3 FEET. FOR TRENCHES LONGER THAN 200' OR LARGER THAN 1,000 SQUARE FEET A LICENSED SOILS ENGINEER SHALL BE PRESENT TO MONITOR THE NATIVE OR IMPORTED BACKFILL OPERATION AND TEST FOR COMPACTION AT 100' OR 200 SQUARE FOOT MAXIMUM INTERVALS

FOR TRENCHES WITH "W" LESS THAN OR EQUAL TO 2' IN THE ROADWAY, A SAND-CEMENT SLURRY (100-E-100) BACKFILL SHALL BE USED. SLURRY SHALL CURE 16 HOURS MINIMUM PRIOR TO BASE PLACEMENT. RAPID SET CEMENT SLURRY SHALL CURE 1 HOUR MINIMUM PRIOR TO BASE PLACEMENT.

IN AREAS NOT IN EXISTING ROADWAY, BACKFILL SHALL BE COMPACTED TO A RELATIVE COMPACTION OF 90%.

3A. NEW CRUSHED AGGREGATE BASE SHALL BE 2" THICKER THAN EXISTING BASE, BUT NOT LESS THAN 8" THICK.

4A. EXCAVATED MATERIAL NOT APPROVED FOR USE IN TRENCH BACKFILL SHALL BE REMOVED FROM JOB SITE UNLESS OTHERWISE USED IN THE WORK.

5A. WHERE WET, UNSTABLE OR RUNNING SOIL IS ENCOUNTERED, SOLID SHEATHING IS REQUIRED FOR ALL VERTICAL TRENCH WALLS.

6A. ANY SHORING REQUIRED SHALL BE DESIGNED BY A REGISTERED CIVIL OR STRUCTURAL ENGINEER.

7A. "W" SHALL BE MEASURED AT TOP OF BEDDING.

VISIBLE SURFACE:

1B. IF REMAINING AC PAVEMENT BETWEEN EDGE OF TRENCH AND EXISTING GUTTER, CURB, CROSS GUTTER, OR CUT LINE IS LESS THAN 3 FEET IN WIDTH, THEN THIS AC SHALL BE REMOVED AND REPLACED WITH NEW AC PAVEMENT.

2B. THE ENGINEER MAY REQUIRE WIDER REMOVAL AREA THAN THAT SHOWN ABOVE TO SUIT FIELD CONDITIONS.

3B. CRACKS SHALL BE SEALED AND A TYPE 2 SLURRY SEAL COATING WITH 2% LATEX SHALL BE APPLIED FROM LANE LINE TO LANE LINE FOR LONGITUDINAL TRENCHES GREATER THAN 200' IN LENGTH FOR ANY LANE AFFECTED.

4B. THE THICKNESS OF REPLACEMENT ASPHALT SHALL BE A MINIMUM OF 1" GREATER THAN EXISTING AC (2" GREATER IF EXISTING STREET IS PAVED WITH RUBBERIZED AC) BUT NOT LESS THAN 4" (5" FOR RUBBERIZED AC). IF EXISTING PAVEMENT IS PCC, REPLACEMENT CONCRETE SHALL BE AS PER SECTION 201.1 OF THE STANDARD SPECS AND 1" THICKER THAN EXISTING.

5B. THE NEW FINISH COURSE SHALL BE PLACED FLUSH WITH THE EXISTING ADJACENT PAVING SURFACE – MAXIMUM VARIANCE FROM FLUSH IS 1/8". NEW AC PAVEMENT ADJACENT TO EXISTING EDGE OF PCC GUTTER SHALL BE 3/8" HIGHER THAN EDGE OF GUTTER.

6B. FOR PCC ROADWAY PAVEMENT, DOWEL AT 24" O.C., #4 DEFORMED BAR, 6" EMBEDMENT, AND CENTERED IN EXISTING SLAB WITH 1-1/2" MINIMUM CONCRETE COVER. DOWEL SHALL BE EPOXIED IN EXISTING SLAB AND CAST IN NEW SLAB.

METHODOLOGY:

1C. AT THE END OF EACH WORK DAY, ANY TRENCH IN AN ARTERIAL OR IN ROLLING HILLS ROAD, MAPLE/235TH ST. OR ARLINGTON AVE. SHALL BE COVERED BY NON-SKID STEEL PLATES OR BE PAVED WITH TEMPORARY OR PERMANENT PAVEMENT FLUSH WITH ADJACENT PAVEMENT SURFACES. WHEN NON-SKID STEEL PLATES ARE USED, THEY SHALL BE WELDED, SECURED IN PLACE, RAMPED WITH AC, AND NOT USED FOR MORE THAN 48 CONSECUTIVE HOURS ON THE SAME SEGMENT OF TRENCH. "PLATE AHEAD" SIGN SHALL BE PROPERLY INSTALLED WHEN PLATES ARE IN USE. OTHER CITY STREETS MAY HAVE LESSER REQUIREMENTS AND WILL BE CONSIDERED ON A CASE BY CASE BASIS.

2C. ALL TRAFFIC LANES SHALL BE CLEANED AND RESTORED FOR USE IMMEDIATELY UPON PLACEMENT OF TEMPORARY AC PAVEMENT, TRENCH PLATES AND/OR FINAL AC PAVEMENT.

3C. ALL TRAFFIC STRIPING AND/OR MARKINGS REMOVED OR DAMAGED DURING CONSTRUCTION SHALL BE REPLACED IN KIND AS DIRECTED BY THE ENGINEER.

4C. TRAFFIC CONTROL SHALL BE PER CITY OF TORRANCE "CONSTRUCTION TRAFFIC CONTROL PROCEDURES ON CITY STREETS" AVAILABLE FROM THE ENGINEERING DEPARTMENT PERMIT COUNTER.

5C. MORITORIUM FOR CUTTING NEW OR RECONSTRUCTED STREETS IS 5 YEARS WITHOUT SPECIAL APPROVAL FROM THE ENGINEERING DIRECTOR. NEW UTILITY SERVICE CONNECTIONS AND SERVICE LINE REPAIRS ARE EXCEPTED IF NOT ABLE TO BE FORSEEN AT THE TIME THE ROADWAY WAS RECONSTRUCTED. APPROVED LONGITUDINAL EXCAVATIONS IN NEW STREETS SHALL REQUIRE THE FULL LANE TO BE GROUND AND OVERLAID.

6C. SLURRY SEALING OF TRENCH AREA MAY BE OMITTED IF PROJECT IS COORDINATED WITHIN ONE YEAR OF A CITY STREET REHABILITATION OR SLURRY SEAL PROJECT.

7C. A COLLECTION DEVICE SHALL BE USED TO COLLECT SEDIMENTS GENERATED DURING SAWCUTTING OPERATION.

8C. TRENCHES WITH "W" LESS THAN 8" WIDE AND LESS THAN OR EQUAL TO 24" DEEP ARE NOT REQUIRED TO USE T-SECTION PAVEMENT CONSTRUCTION, OR APPLY SLURRY SEAL.

9C. ALL PAVEMENT REMOVALS SHALL USE STRAIGHT LINE SAW CUTS A MINIMUM OF 1.5" DEEP.

10C. BORING SHALL BE CONSIDERED AS A CONTINUOUS TRENCH AS FAR AS EXCAVATION REPAIR. POTHOLES LOCATED INTERMITTENTLY WILL NOT BE TREATED AS SEPARATE EXCAVATIONS BUT AS A CONTINUOUS EXCAVATION. THE CITY SHALL RESERVE THE RIGHT TO REQUIRE BORING OR OPEN TRENCH AS THE SITUATION MAY ARISE.

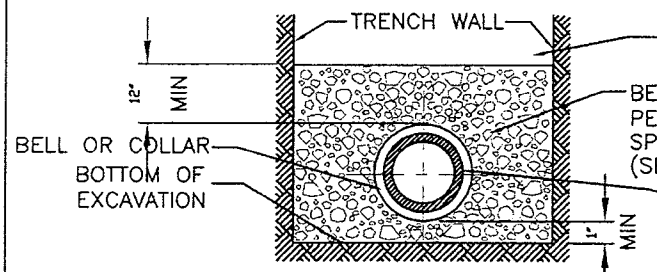

CASE 1: NORMAL TRENCH

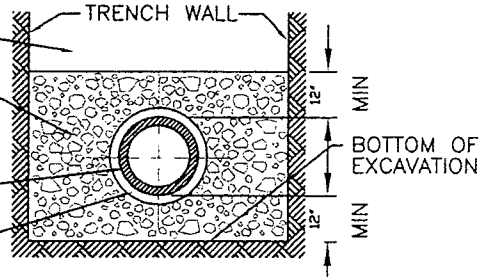

CASE 2: WET, SPONGY GROUND, FILLED GROUND (LESS THAN 90% COMPACTION)

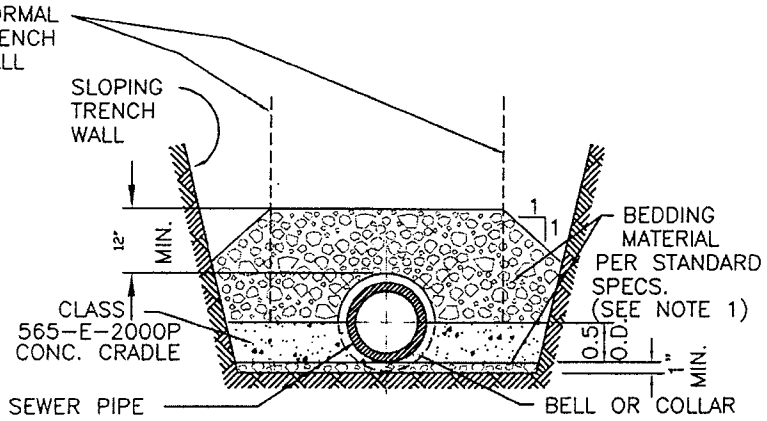

CASE 3: BOTTOM TRENCH WIDTH EXCEEDS THE WIDTH SPECIFIED IN STD. SPECIFICATIONS

NOTE 1: NATIVE MATERIAL AND SAND ARE UNSUITABLE FOR BEDDING OF 8" OR LARGER PIPES.

CONCRETE REINFORCEMENT FOR SEWER PIPE

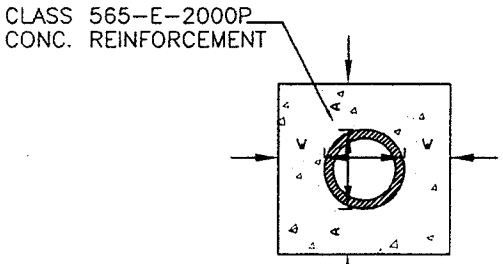

TYPE "X"

TABLES BELOW INDICATE DIMENSIONS OF CONCRETE FOR DIFFERENT SIZES OF PIPE

TYPE "X"						
			CLAY PIPE		CONCRETE PIPE	
SIZE	W	A	STANDARD STRENGTH	EXTRA STRENGTH	STANDARD STRENGTH	EXTRA STRENGTH
6"	4"	4"	0.051	0.051	0.050	0.050
8"	4"	4"	0.063	0.063	0.063	0.063
10"	4"	4"	0.074	0.074	0.074	0.074
12"	4"	4"	0.086	0.086	0.086	0.091
15"	4"	4"	0.107	0.108	0.107	0.114
18"	5"	5"	0.158	0.166	0.159	0.171

SEE NOTE 2

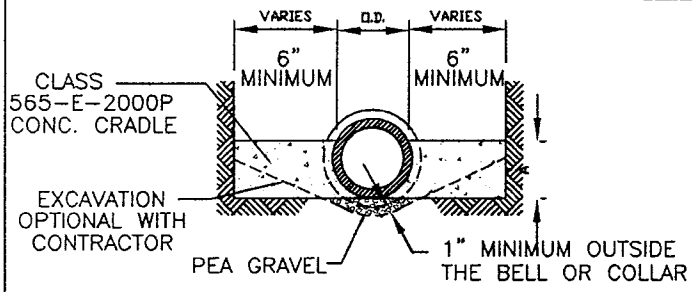

TYPE "Z"

CONCRETE REINFORCEMENT MUST EXTEND TO SOLID BANK

TYPE "Z"					
		CLAY PIPE		CONCRETE PIPE	
SIZE	A	STANDARD STRENGTH	EXTRA STRENGTH	STANDARD STRENGTH	EXTRA STRENGTH
6"	5"	0.017	0.017	0.017	0.017
8"	7"	0.024	0.024	0.024	0.024
10"	9"	0.032	0.032	0.032	0.032
12"	10"	0.037	0.037	0.037	0.037
15"	13"	0.050	0.050	0.050	0.050
18"	16"	0.063	0.064	0.063	0.064

SEE NOTE 2

NOTE 2: COLUMNS INCLUDED BETWEEN ARROWS IN THE TABLES ABOVE INDICATE CUBIC YARDS OF CONCRETE PER LINEAR FT. OF PIPE.

CITY OF TORRANCE

DATE ISSUED	BEDDING FOR SEWER PIPE	STANDARD NO.
23 SEP 2009	ROBERT J. BESTE PUBLIC WORKS DIRECTOR R.C.E. NO. 50737	T204
		SHEET 1 OF 1

TT/T204

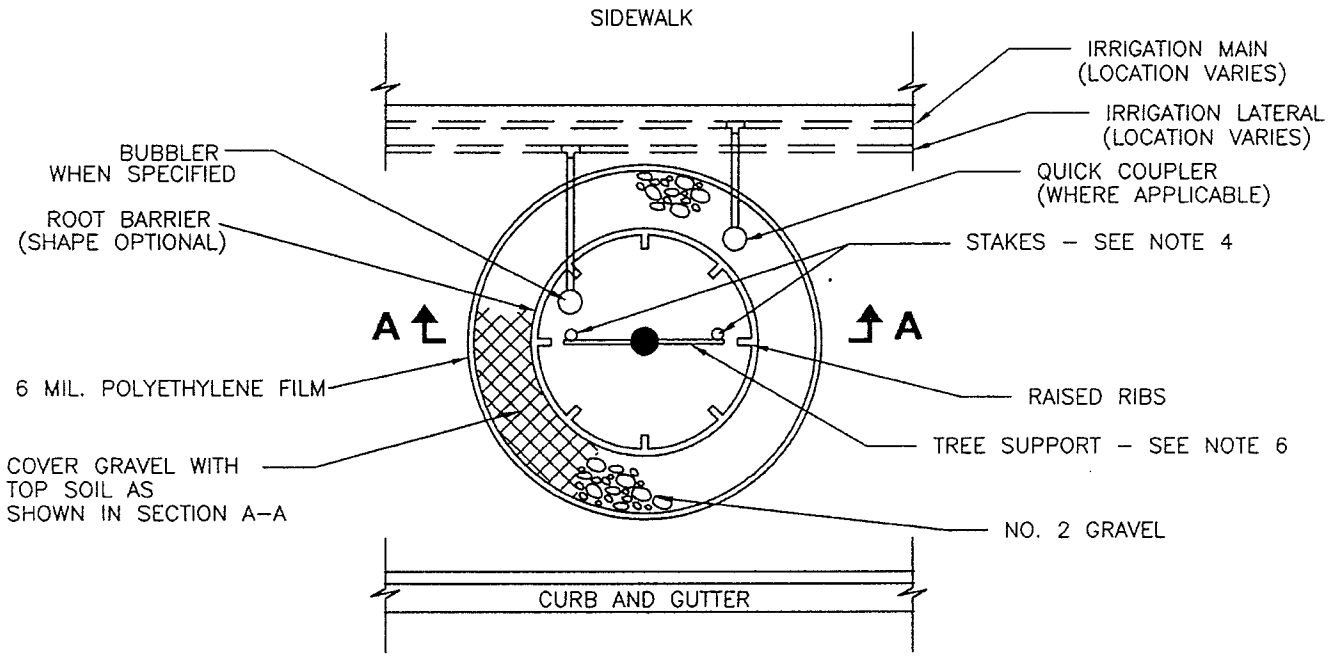

TREE - DIRT PARKWAY

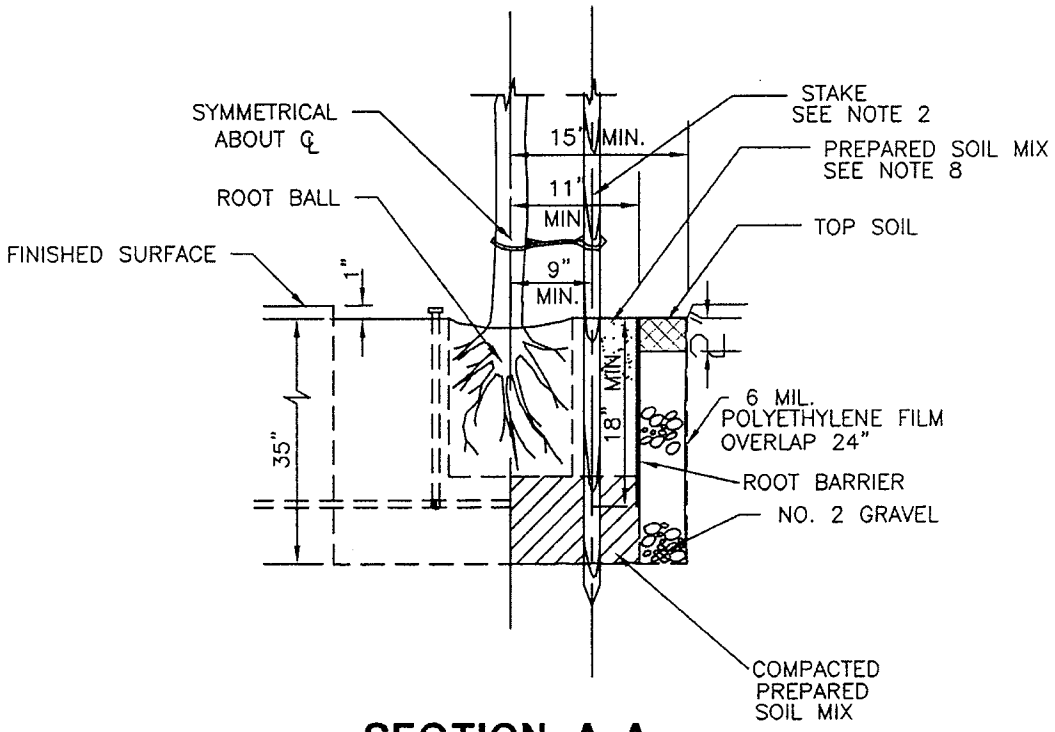

SECTION A-A

CITY OF TORRANCE		
DATE ISSUED 23 SEP 2009	**TREE PLANTING** ROBERT J. BESTE PUBLIC WORKS DIRECTOR R.C.E. NO. 50737	STANDARD NO. **T401** SHEET 1 OF 2

TT/T401

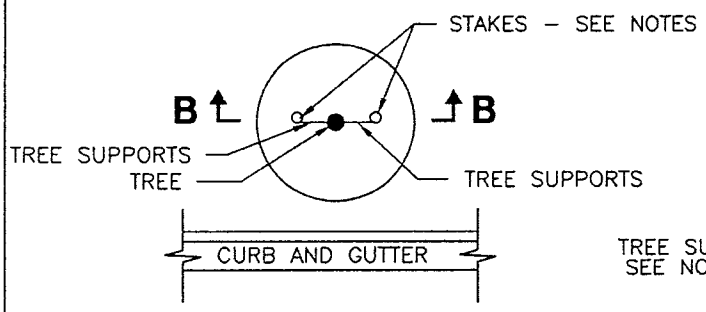

PLAN

LENGTH OF STAKES	
TREE SIZE	LENGTH
15 GAL.	10'
24" BOX	12'
30" BOX	12'
36"–48" BOX	SEE NOTE 5

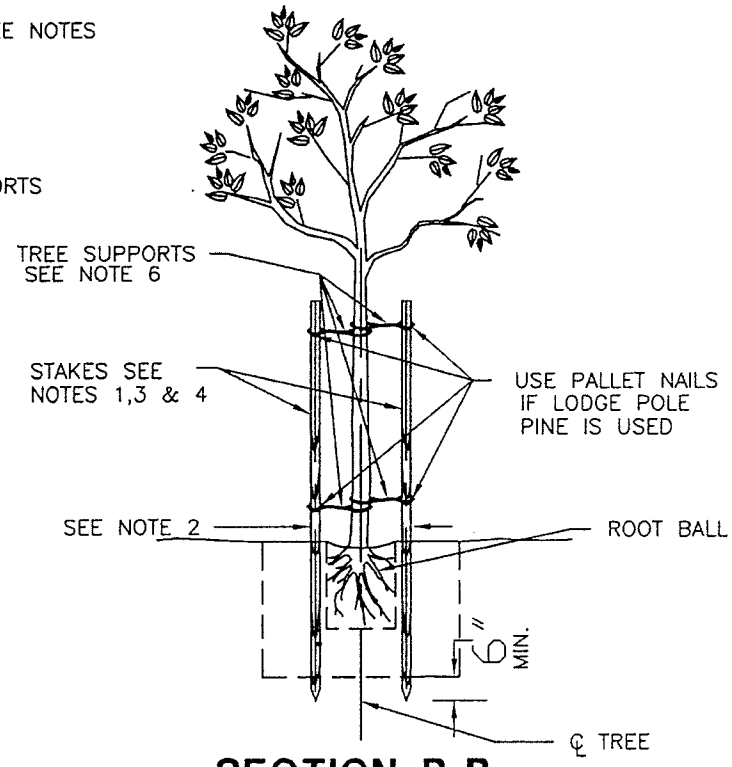

SECTION B-B

NOTES:

1. STAKES SHALL BE EITHER 2" DIAMETER LODGE POLE PINE, TREATED WITH COPPER NANTHANATE OR PRESSURE TREATED WITH CHROMATED COPPER ARSENATE, OR GALVANIZED STEEL PIPE, PER SUBSECTION 308–4.6.1 (METHOD A) OF THE STD. SPEC'S
2. PLACE STAKES 18" APART FOR 15 GAL. TREE. PLACE STAKES AT OUTER EDGE OF ROOT BALL FOR LARGER SIZE (BOX) TREES.
3. HEIGHT OF STAKES SHALL NOT BE HIGHER THAN THE TOP OF THE TREE.
4. ALL STAKES SHALL BE ALIGNED IN THE EAST–WEST DIRECTION REGARDLESS OF CURB ORIENTATION.
5. FOR 36" OR LARGER BOX TREES – STAKE OR GUY AT THE DIRECTION OF THE STREETSCAPE ADMINISTRATOR.
6. TREE TIES SHALL BE PER SUBSECTION 308–4.6.2 OF THE STANDARD SPECIFICATIONS.
7. THE STREETSCAPE ADMINISTRATOR WILL DESIGNATE THE GROUND LOCATION OF ALL TREES BY PLACING OF STAKES OR OTHER SUITABLE MARKERS.
8. UNLESS OTHERWISE APPROVED BY STREETSCAPE ADMINISTRATOR PREPARED SOIL MIX SHALL BE:
   - 4 PARTS BY VOLUME NITROGEN–STABILIZED ORGANIC AMENDMENT.
   - 6 PARTS BY VOLUME ON–SITE SOIL FROM AN AREA APPROVED BY THE STREETSCAPE ADMINISTRATOR.
   - 2 LBS. IRON SULFATE PER CUBIC YARD OF MIX.
9. ROOT BARRIERS WHEN SPECIFIED ON PROJECT DRAWINGS OR IN PROJECT SPECIFICATIONS, SHALL BE FABRICATED FROM A HIGH DENSITY AND HIGH IMPACT PLASTIC SUCH AS POLYVINYL CHLORIDE, ABS OR POLYETHYLENE AND HAVE A MINIMUM THICKNESS OF 0.06". THE PLASTIC SHALL HAVE 1/2" TO 3/4" HIGH RAISED VERTICAL RIBS ON THE INNER SURFACE SPACED AT LEAST 6" BUT NOT MORE THAN 8" APART.

CITY OF TORRANCE

DATE ISSUED	TREE PLANTING	STANDARD NO.
23 SEP 2009	ROBERT J. BESTE PUBLIC WORKS DIRECTOR R.C.E. NO. 50737	T401
		SHEET 2 OF 2

TT/T401

SEWER PROTECTION ALTERNATIVE CONCRETE ENCASEMENT

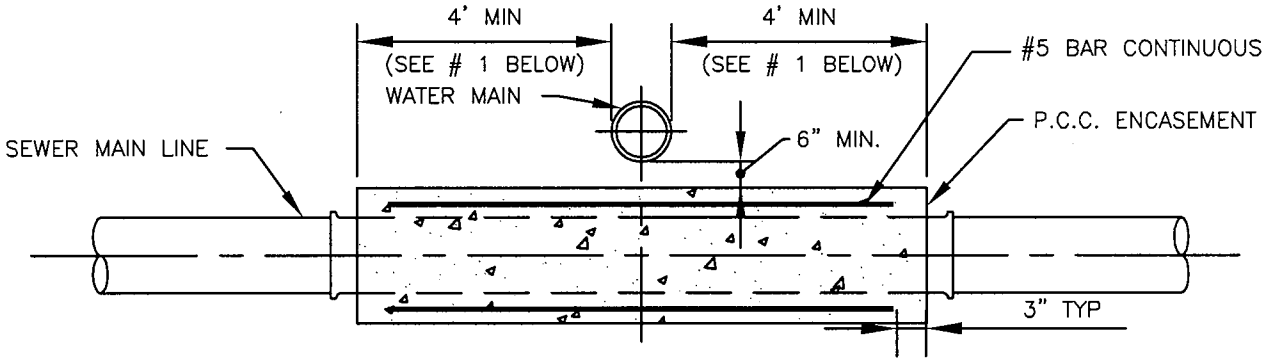

SEWER LINE ENCASEMENT DETAIL FOR WATER LINE ABOVE SEWER

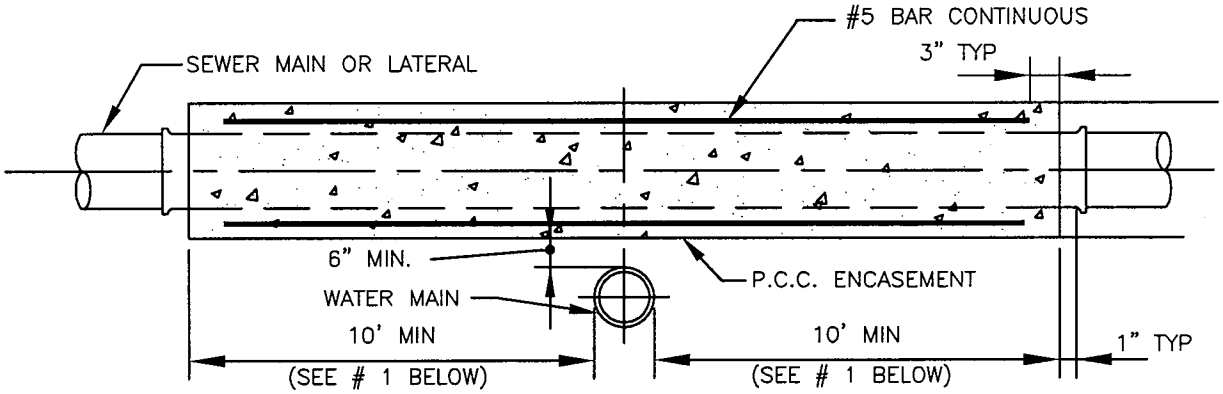

SEWER LINE ENCASEMENT DETAIL FOR WATER LINE BELOW SEWER

GENERAL NOTES:

1. EXTEND BOTH ENDS OF ENCASEMENT TO A POINT 1" SHORT OF FIRST PIPE JOINT BEYOND LOCATION SPECIFIED ON PLAN.
2. APPLY FORM OIL, THIN PLASTIC SHEET, OR OTHER ACCEPTABLE MATERIAL TO PIPE, TO PREVENT BOND BETWEEN PIPE AND CONCRETE.
3. USE MINIMUM CLASS 520-C-2500 CONCRETE FOR ALL CASES.

ACCOMPANYING STD. T714

CITY OF TORRANCE - ENGINEERING DEPARTMENT

DATE ISSUED	SEWER ENCASEMENT	STANDARD NO.
16 NOV 1998	RICHARD W. BURTT ENGINEERING DIRECTOR R.C.E. NO. 32862	T716-1 SHEET 1 OF 2

DV/EM/T716-1

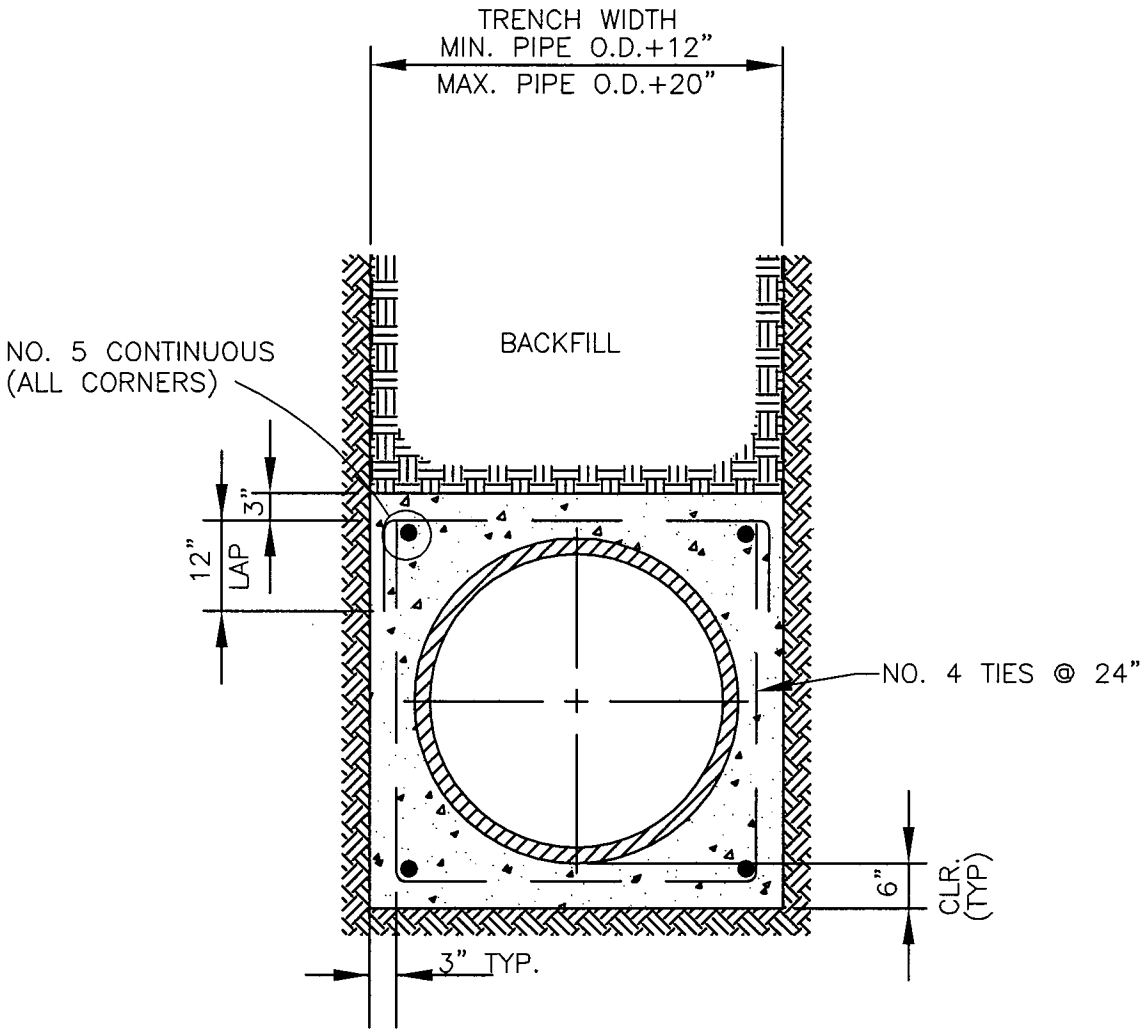

CONCRETE ENCASEMENT DETAIL

NOT TO SCALE

ACCOMPANYING STD. T700

CITY OF TORRANCE - ENGINEERING DEPARTMENT

DATE ISSUED	CONCRETE ENCASEMENT	STANDARD NO.
16 NOV 1998	RICHARD W. BURTT ENGINEERING DIRECTOR R.C.E. NO. 32862	**T716-1** SHEET 2 OF 2

DV/EM/T716-1

APPENDIX III

SPPWC STANDARD PLANS

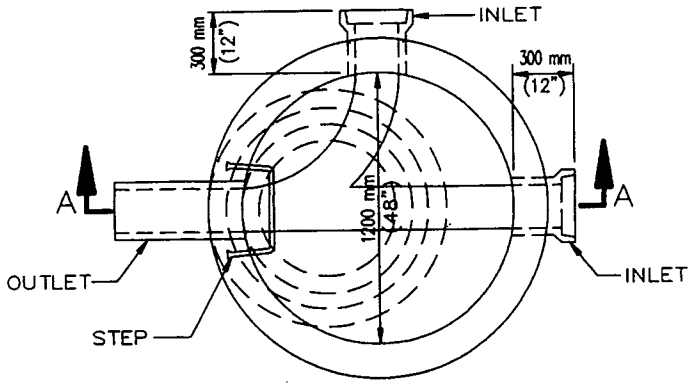

PLAN
SHOWING BASE

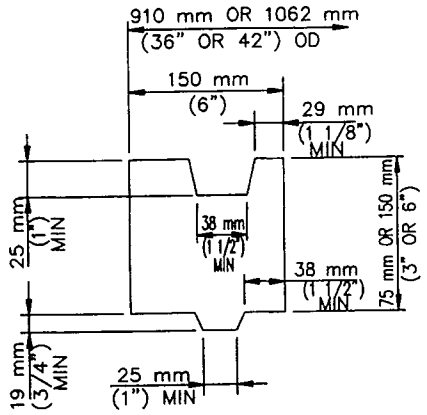

ADJUSTING RING DETAIL

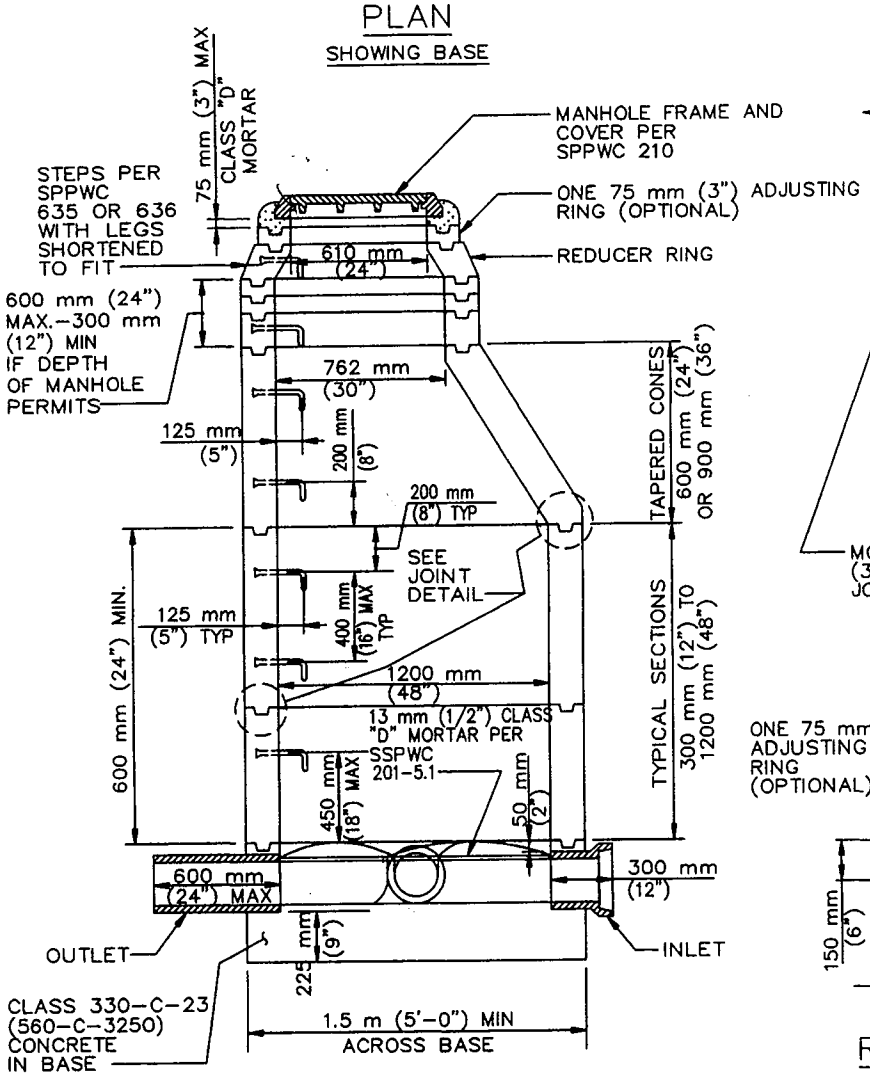

SECTION A–A

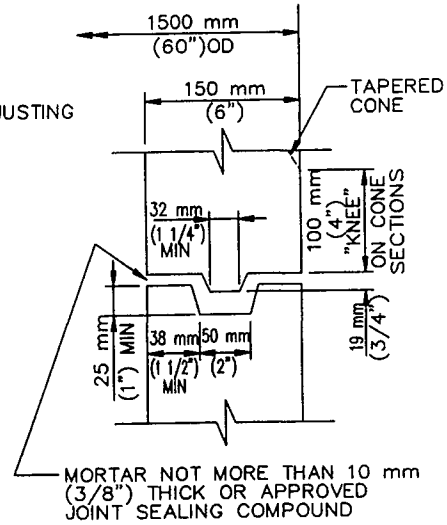

JOINT DETAIL
NON–REINFORCED

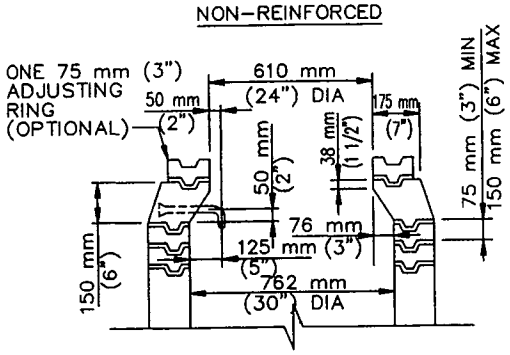

REDUCER RING AND ADJUSTING RINGS

STANDARD PLANS FOR PUBLIC WORKS CONSTRUCTION

PROMULGATED BY THE PUBLIC WORKS STANDARDS INC. GREENBOOK COMMITTEE 1984 REV. 1993, 1995

PRECAST CONCRETE SEWER MANHOLE

USE WITH STANDARD SPECIFICATIONS FOR PUBLIC WORKS CONSTRUCTION

STANDARD PLAN METRIC
200–2
SHEET 1 OF 2

NOTES:

1. EXCEPT AS NOTED HEREON, THE PRECAST UNITS SHALL BE MANUFACTURED AND TESTED IN ACCORDANCE WITH ASTM C 478. AS AN ALTERNATE CURING METHOD, THE UNITS MAY BE CURED USING SATURATED STEAM FOR A MINIMUM OF 12 HOURS FOLLOWED BY 6 DAYS OF WATER CURING OR MEMBRANE CURING. IF THE UNITS ARE CURED BY THE ALTERNATE METHOD, THEY SHALL NOT BE SHIPPED PRIOR TO 8 DAYS AFTER CASTING NOR UNTIL THE CONCRETE HAS ATTAINED A STRENGTH OF 25 MPa (3500 PSI)

2. MANHOLE STEPS SHALL CONFORM TO SPPWC 635 TYPE 1 OR 3 OR SPPWC 636. THE MANHOLE STEPS SHALL BE UNIFORMLY SPACED AT A MAXIMUM OF 400 mm (16"). THE LOWEST STEP SHALL BE PLACED NOT LESS THAN 200 mm (8") NOR MORE THAN 450 mm (18") ABOVE THE SHELF. THE STEPS SHALL PROJECT 125 mm (5") INSIDE THE MANHOLE.

3. RISER SECTIONS MAY BE REINFORCED OR UNREINFORCED. REINFORCED SECTIONS SHALL BE REINFORCED IN ACCORDANCE WITH ASTM C 478 AND SHALL HAVE A MINIMUM WALL THICKNESS OF 125 mm (5"). UNREINFORCED RISER SECTIONS SHALL HAVE A MINIMUM WALL THICKNESS OF 150 mm (6").

4. THE 600 mm x 1200 mm (24"x48") ECCENTRIC CONES MAY BE REINFORCED OR UNREINFORCED. IF REINFORCED, THE WALL THICKNESS SHALL BE NOT LESS THAN 125 mm (5"). IF UNREINFORCED, THE WALL THICKNESS SHALL NOT BE LESS THAN 150 mm (6").

5. JOINTS SHALL BE TONGUE AND GROOVE. JOINTS FOR REINFORCED STRUCTURES SHALL CONFORM WITH ASTM C 478 SECTION 14.

6. PRECAST UNITS SHALL BE ASSEMBLED USING CLASS "B" MORTAR.

7. IF 762 mm (30") DIAMETER MANHOLE FRAME AND COVER IS REQUIRED, IT SHALL BE INSTALLED WHERE THE REDUCER RING IS SHOWN IN THE SECTION.

8. FOR REINFORCED PRECAST STRUCTURES, ALL REINFORCEMENT SHALL HAVE A MINIMUM OF 50 mm (2") OF COVER OVER THE STEEL ON THE INSIDE FACE.

9. THE TOP OPENING OF THE MANHOLE AND THE STEPS SHALL BE PLACED DIRECTLY OVER THE OUTLET OF THE STRUCTURE EXCEPT AS OTHERWISE NOTED ON PLANS.

10. CONCRETE BASE AND STUB WALLS SHALL BE POURED IN ONE OPERATION TO A POINT 50 mm (2") ABOVE THE INLET AND OUTLET PIPES. ALL PIPES SHALL BE RIGIDLY SUPPORTED BY TEMPORARY PIERS OR OTHER METHODS DURING THE OPERATION. CONCRETE SHALL SET FOR 24 HOURS BEFORE PLACING PRECAST UNITS.

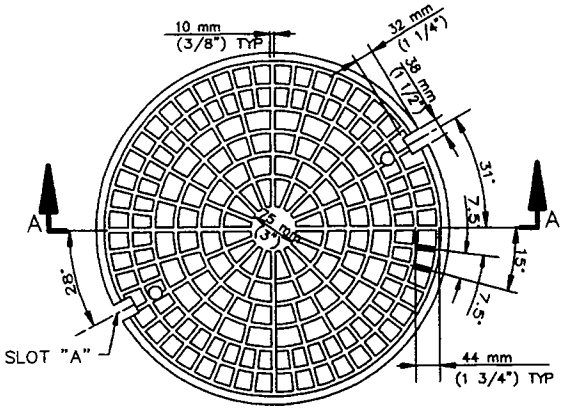

PLAN OF COVER
TOP VIEW

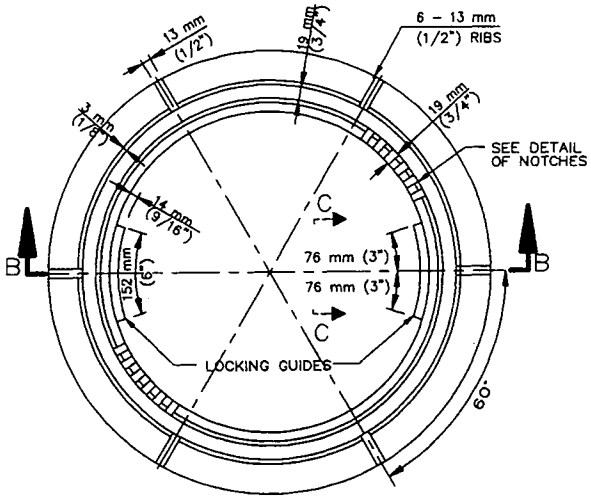

PLAN OF FRAME

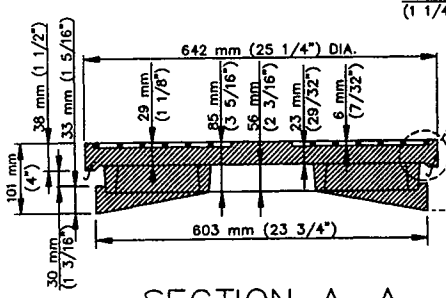

SECTION A–A

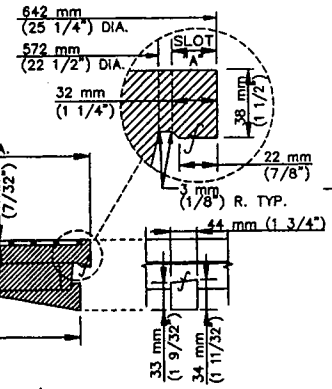

COVER LUG
END VIEW

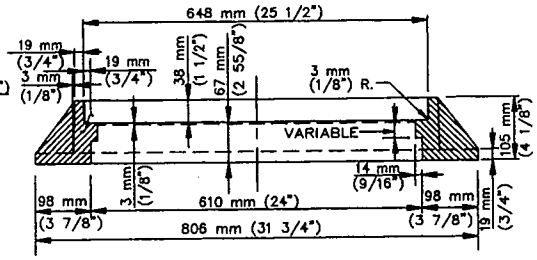

SECTION B–B

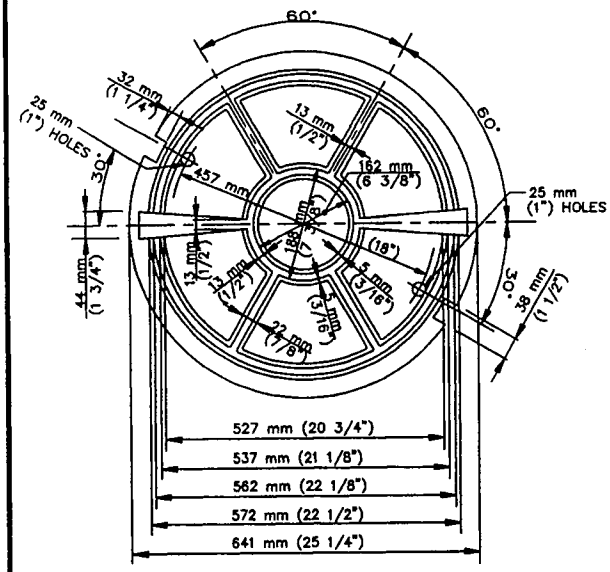

PLAN OF COVER
BOTTOM VIEW

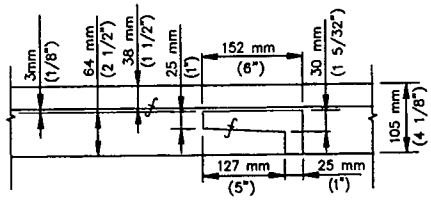

LOCKING GUIDE
SIDE VIEW C–C

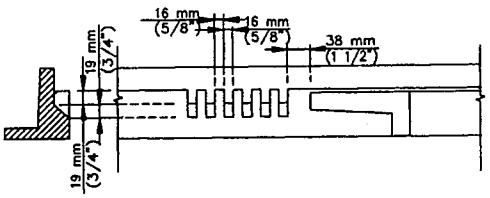

DETAIL OF NOTCHES

STANDARD PLANS FOR PUBLIC WORKS CONSTRUCTION

PROMULGATED BY THE
PUBLIC WORKS STANDARDS, INC.,
GREENBOOK COMMITTEE
1984
REV. 1993, 1996

610 mm (24") MANHOLE FRAME AND COVER LOCKING TYPE

USE WITH STANDARD SPECIFICATIONS FOR PUBLIC WORKS CONSTRUCTION

STANDARD PLAN
METRIC
210–2

SHEET 1 OF 2

NOTES:

1. THE CAST IRON USED SHALL CONFORM TO ASTM A-48 CLASS 35B.
2. THE FRAME AND COVER SHALL BE COATED WITH ASPHALTUM OR BITUMINOUS PAINT AFTER TESTING AND INSPECTION.
3. COVERS SHALL BE CAST WITH THE LETTER "D" FOR STORM DRAINS AND "S" FOR SEWERS AND THE AGENCY IDENTIFICATION IN ACCORDANCE WITH INSTRUCTIONS FURNISHED BY THE AGENCY. THE LETTER "D" OR "S" SHALL BE APPROXIMATELY 65 mm (2 1/2") HIGH WITH 13 mm (1/2") LINE WIDTH AND PLACED IN THE CENTER OF THE COVER. ALL LETTERS SHALL BE FLUSH WITH THE FINISHED SURFACE OF THE COVER.
4. FOUNDRY IDENTIFYING MARK, HEAT AND DATE SHALL BE CAST ON THE BOTTOM OF THE COVER AND ON THE INSIDE OF THE FRAME.
5. IMPORTED COVERS AND FRAMES SHALL HAVE THE COUNTRY OF ORIGIN MARKING IN COMPLIANCE WITH FEDERAL REGULATIONS.
6. WEIGHT OF FRAME SHALL BE 73 kg (160 POUNDS). WEIGHT OF COVER SHALL BE 91 kg (200 POUNDS). ACTUAL WEIGHTS SHALL BE WITHIN A RANGE OF 95% TO 110%.
7. THE MANHOLE FRAME AND COVER SHALL BE INSPECTED BY THE ENGINEER PRIOR TO SHIPMENT TO THE JOB SITE. ACCEPTANCE WILL BE INDICATED BY THE AGENCY'S MARK.
8. THE PROOF-LOAD FOR TEST METHOD B OF SSPWC 206-3.2 IS 228 kN (55,300 POUNDS).
9. COVERS FOR MANHOLES LOCATED IN EASEMENTS, ALLEYS, PARKWAYS AND ALL OTHER PLACES EXCEPT PAVED STREETS SHALL BE PROVIDED WITH SOCKET SET SCREW LOCKING DEVICES. DRILL AND TAP TWO HOLES TO A DEPTH OF 25 mm (1") AT 90 DEGREES TO PICK HOLE AND INSTALL 19 mm x 19 mm (3/4" x 3/4") STAINLESS STEEL SOCKET SET SCREWS WITH 10 mm (3/8") RECESSED HEX HEAD. ALL THREADS SHALL BE N.C.

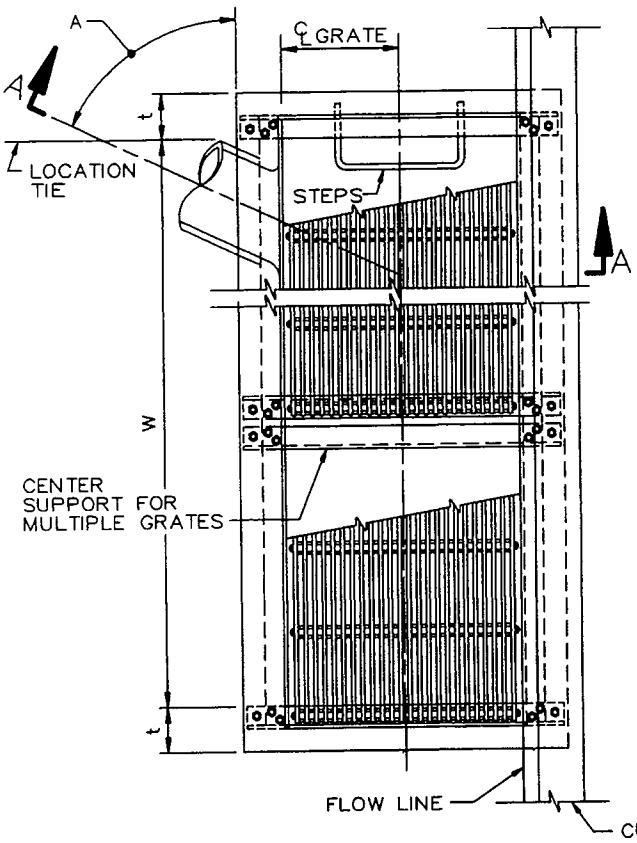

PLAN

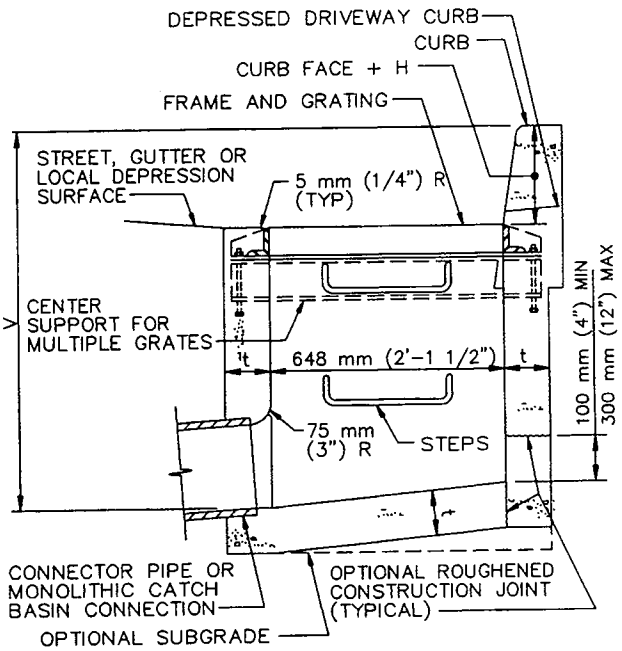

SECTION A–A

STRUCTURAL DATA			
WALL AND SLAB DIMENSIONS AND REINFORCEMENT REQUIREMENTS			
NO. OF GRATES	MAX V	t	REINFORCEMENT FOR WALLS AND SLABS
1–2	1.2 m (4')	150 mm (6")	NOT REQUIRED
1–2	2.4 m (8')	200 mm (8")	
1–2	3.0 m (10')	250 mm (10")	
1–2	3.5 m (12')	250 mm (10")	REQUIRED
3–4	1.2 m (4')	150 mm (6")	NOT REQUIRED
3–4	2.0 m (7')	200 mm (8")	
3–4	2.4 m (8')	200 mm (8")	REQUIRED
3–4	3.5 m (12')	250 mm (10")	
5–6	1.2 m (4')	150 mm (6")	NOT REQUIRED
5–6	1.8 m (6')	200 mm (8")	
5–6	2.4 m (8')	200 mm (8")	REQUIRED
5–6	3.5 m (12')	200 mm (8")	
> 6	1.2 m (4')	150 mm (6")	
> 6	2.4 m (8')	200 mm (8")	
> 6	3.5 m (12')	250 mm (10")	

STANDARD PLANS FOR PUBLIC WORKS CONSTRUCTION

PROMULGATED BY THE PUBLIC WORKS STANDARDS, INC., GREENBOOK COMMITTEE 1984 REV. 1992, 1996

CURBSIDE GRATING CATCH BASIN

USE WITH STANDARD SPECIFICATIONS FOR PUBLIC WORKS CONSTRUCTION

STANDARD PLAN METRIC 303–2

SHEET 1 OF 2

NOTES:

1. SURFACE OF ALL EXPOSED CONCRETE SHALL CONFORM IN SLOPE GRADE, COLOR, FINISH, AND SCORING TO THE EXISTING OR PROPOSED CURB ADJACENT TO THE BASIN.

2. ALL CURVED CONCRETE SURFACES SHALL BE FORMED BY CURVED FORMS, AND SHALL NOT BE SHAPED BY PLASTERING.

3. FLOOR OF BASIN SHALL BE GIVEN A STEEL TROWEL FINISH AND SHALL HAVE A LONGITUDINAL AND LATERAL SLOPE OF 1:12 MINIMUM AND 1:3 MAXIMUM, EXCEPT WHERE THE GUTTER GRADE EXCEEDS 8%, IN WHICH CASE THE LONGITUDINAL SLOPE OF THE FLOOR SHALL BE THE SAME AS THE GUTTER GRADE. SLOPE FLOOR FROM ALL DIRECTIONS TO THE OUTLET.

4. ONE GRATING IS REQUIRED UNLESS OTHERWISE SHOWN ON THE PLANS.

5. DIMENSIONS:

   V = THE DIFFERENCE IN ELEVATION BETWEEN THE TOP OF THE CURB AND THE INVERT OF THE CATCH BASIN AT THE OUTLET = 1.35 m (4.5').

   V_I = THE DIFFERENCE IN ELEVATION BETWEEN THE TOP OF THE CURB AND THE INVERT AT THE UPSTREAM END OF THE BASIN, AND SHALL BE DETERMINED BY THE REQUIREMENTS OF NOTE 3, BUT SHALL NOT BE LESS THAN CURB FACE PLUS 300 mm (12").

   V_U = THE DIFFERENCE IN ELEVATION BETWEEN THE TOP OF THE CURB AND THE INVERT AT THE INLET. NOTED ON THE PLANS.

   H = NOTED ON THE PLANS.

   W = 900 mm (2'–11 3/8") FOR ONE GRATING; ADD 1051 mm (3'–5 3/8") FOR EACH ADDITIONAL GRATING.

   A = THE ANGLE, IN DEGREES, INTERCEPTED BY THE CENTERLINE OF THE CONNECTOR PIPE AND THE CATCH BASIN WALL TO WHICH THE CONNECTOR PIPE IS ATTACHED.

6. PLACE CONNECTOR PIPES AS INDICATED ON THE PLANS. UNLESS OTHERWISE SPECIFIED, THE CONNECTOR PIPE SHALL BE LOCATED AT THE DOWNSTREAM END OF THE BASIN. WHERE THE CONNECTOR PIPE IS SHOWN AT A CORNER, THE CENTERLINE OF THE PIPE SHALL INTERSECT THE INSIDE CORNER OF THE BASIN. THE PIPE MAY BE CUT AND TRIMMED AT A SKEW NECESSARY TO INSURE MINIMUM 80 mm (3") PIPE EMBEDMENT, ALL AROUND, WITHIN THE CATCH BASIN WALL, AND 75 mm (3") RADIUS OF ROUNDING OF STRUCTURE CONCRETE, ALL AROUND, ADJACENT TO PIPE ENDS. A MONOLITHIC CATCH BASIN CONNECTION SHALL BE USED TO JOIN THE CONNECTOR PIPE TO THE CATCH BASIN WHENEVER ANGLE "A" IS LESS THAN 70° OR GREATER THAN 110°, OR WHENEVER THE CONNECTOR PIPE IS LOCATED IN A CORNER. THE OPTIONAL USE OF A MONOLITHIC CATCH BASIN CONNECTION IN ANY CASE IS PERMITTED. MONOLITHIC CATCH BASIN CONNECTIONS MAY BE CONSTRUCTED TO AVOID CUTTING STANDARD LENGTHS OF PIPE.

7. STEPS SHALL BE LOCATED AS SHOWN. IF THE CONNECTOR PIPE INTERFERES WITH THE STEPS, THEY SHALL BE LOCATED AT THE CENTERLINE OF THE DOWNSTREAM GRATING. STEPS SHALL BE SPACED 300 mm (12") APART. THE TOP STEP SHALL BE 175 mm (7") BELOW THE TOP OF THE GRATING AND PROJECT 65 mm (2 1/2"). ALL OTHER STEPS SHALL PROJECT 130 mm(5").

8. THE FOLLOWING SPPWC ARE INCORPORATED HEREIN:
   308 MONOLITHIC CATCH BASIN CONNECTION
   309 CATCH BASIN REINFORCEMENT
   311 FRAME AND GRATING FOR CATCH BASINS
   635 STEEL STEP
   636 POLYPROPYLENE PLASTIC STEP

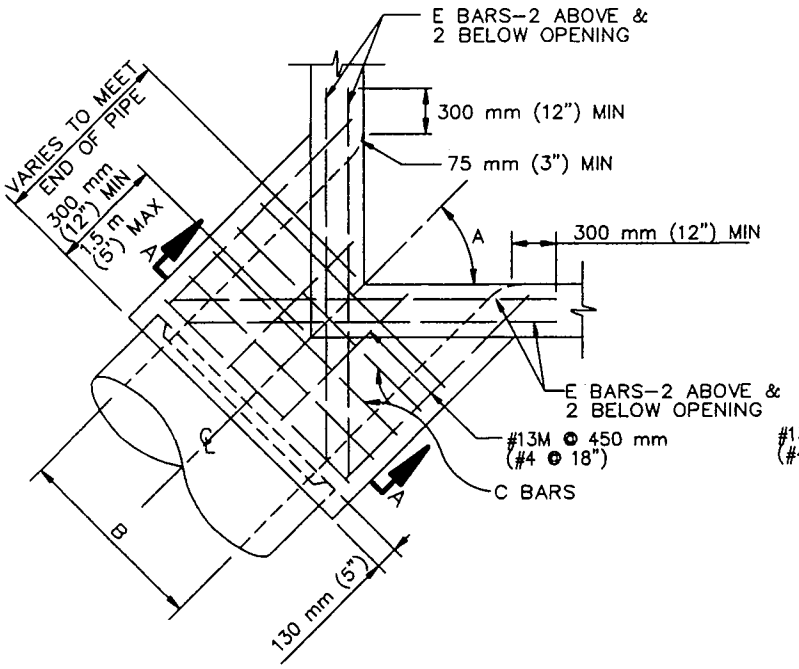

PLAN
CORNER CONNECTION

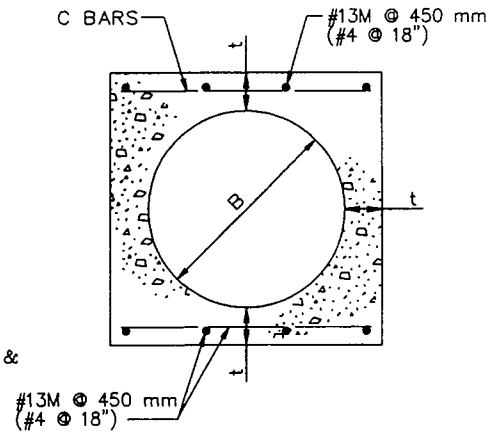

SECTION A–A

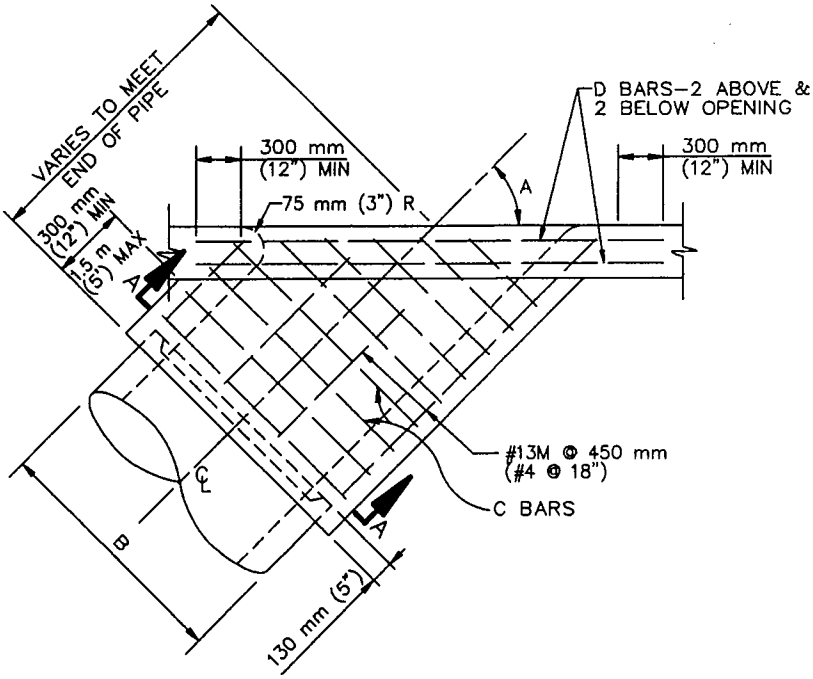

PLAN
SIDE CONNECTION

STANDARD PLANS FOR PUBLIC WORKS CONSTRUCTION

PROMULGATED BY THE
PUBLIC WORKS STANDARDS, INC.,
GREENBOOK COMMITTEE
1984
REV. 1996

MONOLITHIC CATCH BASIN CONNECTION

USE WITH STANDARD SPECIFICATIONS FOR PUBLIC WORKS CONSTRUCTION

STANDARD PLAN
METRIC
308–1
SHEET 1 OF 2

STRUCTURAL DATA							
B	t	C BARS	D&E BARS	B	t	C BARS	D&E BARS
300 mm (12")	115 mm (4")	#13M @ 150 mm (#4 @ 6")	#16M (#5)	1050 mm (42")	190 mm (7 1/2")	#16M @ 150 mm (#5 @ 6")	#19M (#6)
375 mm (15")	115 mm (4 1/4")			1125 mm (45")	190 mm (7 3/4")		
450 mm (18")	115 mm (4 1/2")			1200 mm (48")	215 mm (8")		
525 mm (21")	140 mm (5")			1275 mm (51")	215 mm (8 1/2")		
600 mm (24")	140 mm (5 1/4")			1350 mm (54")	240 mm (9")		
675 mm (27")	140 mm (5 1/2")			1425 mm (57")	240 mm (9 1/4")		
750 mm (30")	165 mm (6")			1500 mm (60")	240 mm (9 1/2")		
825 mm (33")	165 mm (6 1/4")			1575 mm (63")	260 mm (10")		
900 mm (36")	165 mm (6 1/2")			1650 mm (66")	260 mm (10 1/4")		
975 mm (39")	190 mm (7")			1725 mm (69")	280 mm (10 3/4")		
				1800 mm (72")	280 mm (11")		
FOR B GREATER THAN 1800 mm (72") SEE PLANS							

NOTES

1. REINFORCING STEEL SHALL BE 40 mm (1–1/2") CLEAR FROM FACE OF CONCRETE UNLESS OTHERWISE SHOWN.

2. REINFORCING STEEL FOR INSIDE FACE OF CATCH BASIN SHALL BE CUT AT CENTER OF OPENING AND BENT INTO WALLS OF MONOLITHIC CATCH BASIN CONNECTION. REINFORCING STEEL FOR OUTSIDE FACE OF CATCH BASIN SHALL BE CUT 50 mm (2") CLEAR OF OPENING.

3. CONNECTION SHALL BE PLACED MONOLITHIC WITH CATCH BASIN. THE ROUNDED EDGE OF OUTLET SHALL BE CONSTRUCTED BY PLACING CONCRETE WITH THE SAME CLASS OF CONCRETE AS THE CATCH BASIN AGAINST A CURVED FORM WITH A RADIUS OF 75 mm (3").

4. CONNECTIONS SHALL BE CONSTRUCTED WHEN:

   (A) PIPES INLET OR OUTLET THROUGH CORNER OF CATCH BASIN

   (B) ANGLE A FOR PIPES THROUGH 750 mm (30") IN DIAMETER IS LESS THAN 70° OR GREATER THAN 110°.

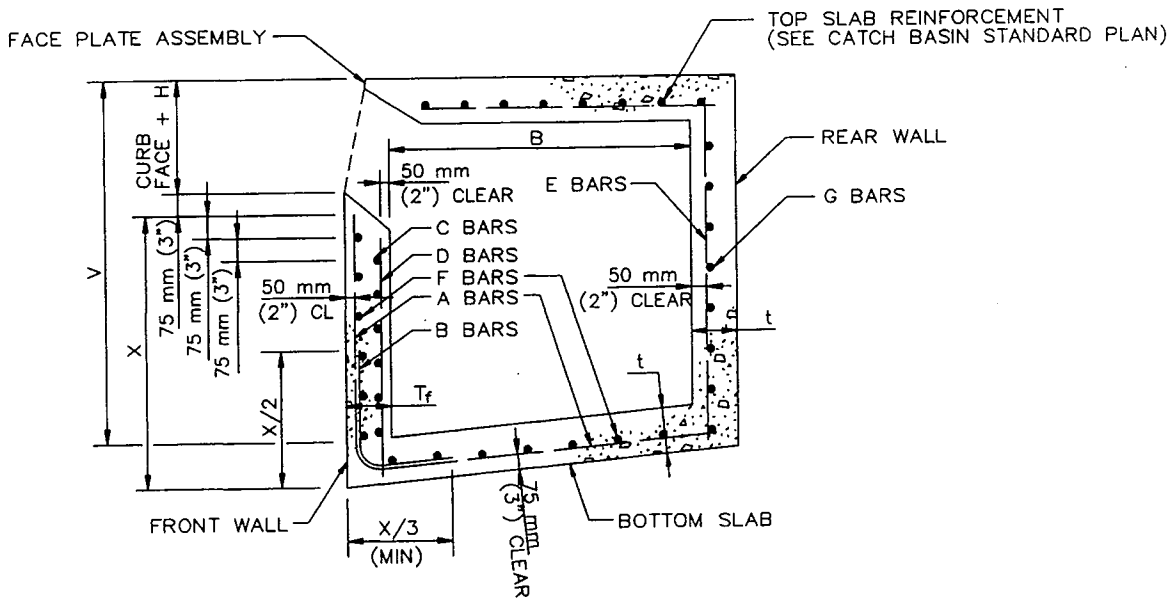

TYPICAL REINFORCEMENT DETAILS

MAX. W	MAX. V	t	tf	A & B BARS	C BARS	D BARS	E BARS	F BARS	G BARS
1 m (3.5')	2.4 m (8')	150 mm (6")	150 mm (6")	—	—	—	—	—	—
1 m (3.5')	3.5 m (12')	200 mm (8")	200 mm (8")	—	—	—	—	—	—
2 m (7')	1.8 m (6')	150 mm (6")	150 mm (6")	—	—	—	—	—	—
2 m (7')	3.5 m (12')	200 mm (8")	200 mm (8")	—	—	—	—	—	—
4 m (14')	1.2 m (4')	150 mm (6")	150 mm (6")	—	13M @ 300 mm (#4 @ 12")	13M @ 450 mm (#4 @ 18")	—	—	—
4 m (14')	2.4 m (8')	150 mm (6")	200 mm (8")	—	13M @ 300 mm (#4 @ 12")	13M @ 450 mm (#4 @ 18")	—	—	—
4 m (14')	3.5 m (12')	200 mm (8")	250 mm (10")	—	13M @ 150 mm (#4 @ 6")	13M @ 450 mm (#4 @ 18")	—	—	—
9 m (28')	1.2 m (4')	150 mm (6")	150 mm (6")	13M @ 600 mm (#4 @ 24")	—	—	—	13M @ 450 mm (#4 @ 18")	—
9 m (28')	1.5 m (5')	150 mm (6")	200 mm (8")	13M @ 600 mm (#4 @ 24")	—	—	—	13M @ 450 mm (#4 @ 18")	—
9 m (28')	1.8 m (6')	150 mm (6")	200 mm (8")	13M @ 450 mm (#4 @ 18")	—	—	—	13M @ 450 mm (#4 @ 18")	—
9 m (28')	2.1 m (7')	200 mm (8")	200 mm (8")	13M @ 425 mm (#4 @ 17")	—	—	—	13M @ 450 mm (#4 @ 18")	—
9 m (28')	2.4 m (8')	200 mm (8")	200 mm (8")	13M @ 325 mm (#4 @ 13")	—	—	—	13M @ 450 mm (#4 @ 18")	—
9 m (28')	2.7 m (9')	200 mm (8")	250 mm (10")	13M @ 375 mm (#4 @ 15")	—	—	—	13M @ 450 mm (#4 @ 18")	—
9 m (28')	3.0 m (10')	200 mm (8")	250 mm (10")	13M @ 300 mm (#4 @ 12")	—	—	—	13M @ 450 mm (#4 @ 18")	—
9 m (28')	3.3 m (11')	200 mm (8")	250 mm (10")	16M @ 375 mm (#5 @ 15")	—	—	13M @ 250 mm (#4 @ 10")	13M @ 450 mm (#4 @ 18")	13M @ 450 mm (#4 @ 18")
9 m (28')	3.5 m (12')	200 mm (8")	250 mm (10")	19M @ 450 mm (#6 @ 18")	—	—	13M @ 225 mm (#4 @ 9")	13M @ 450 mm (#4 @ 18")	13M @ 450 mm (#4 @ 18")
FOR W > 9 m (28') OR B > 1200 mm (4') SEE PLANS									

CURB OPENING CATCH BASIN REINFORCEMENT

STANDARD PLANS FOR PUBLIC WORKS CONSTRUCTION

PROMULGATED BY THE PUBLIC WORKS STANDARDS, INC., GREENBOOK COMMITTEE 1984 REV. 1996

CATCH BASIN REINFORCEMENT

USE WITH STANDARD SPECIFICATIONS FOR PUBLIC WORKS CONSTRUCTION

STANDARD PLAN METRIC
309-1
SHEET 1 OF 2

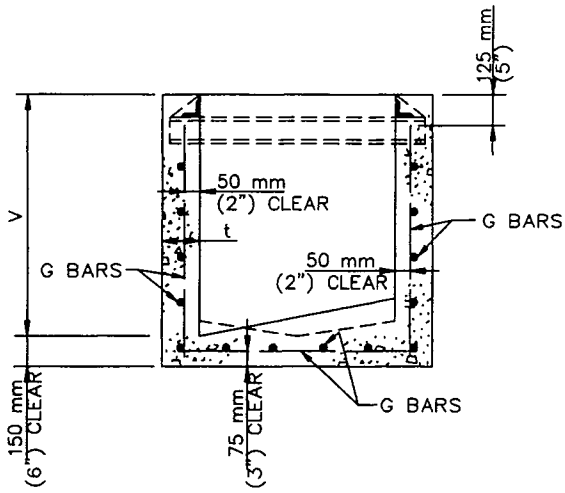

TYPICAL REINFORCEMENT DETAILS

V MAX	t	SIDE AND END WALL STEEL G BARS
1.2 m (4')	150 mm (6")	#13M @ 250 mm (#4 @ 10")
2.4 m (8')	200 mm (8")	#13M @ 150 mm (#4 @ 6")
3.5 m (12')	250 mm (10")	#16M @ 150 mm (#5 @ 6")
FOR V > 3.5 m (12') SEE PLANS		

GRATING CATCH BASIN REINFORCEMENT

NOTE

UNLESS OTHERWISE SPECIFIED, REINFORCEMENT FOR CURB OPENINGS AND GRATING CATCH BASINS SHALL TERMINATE 50 mm (2") FROM FACE OF CONCRETE.

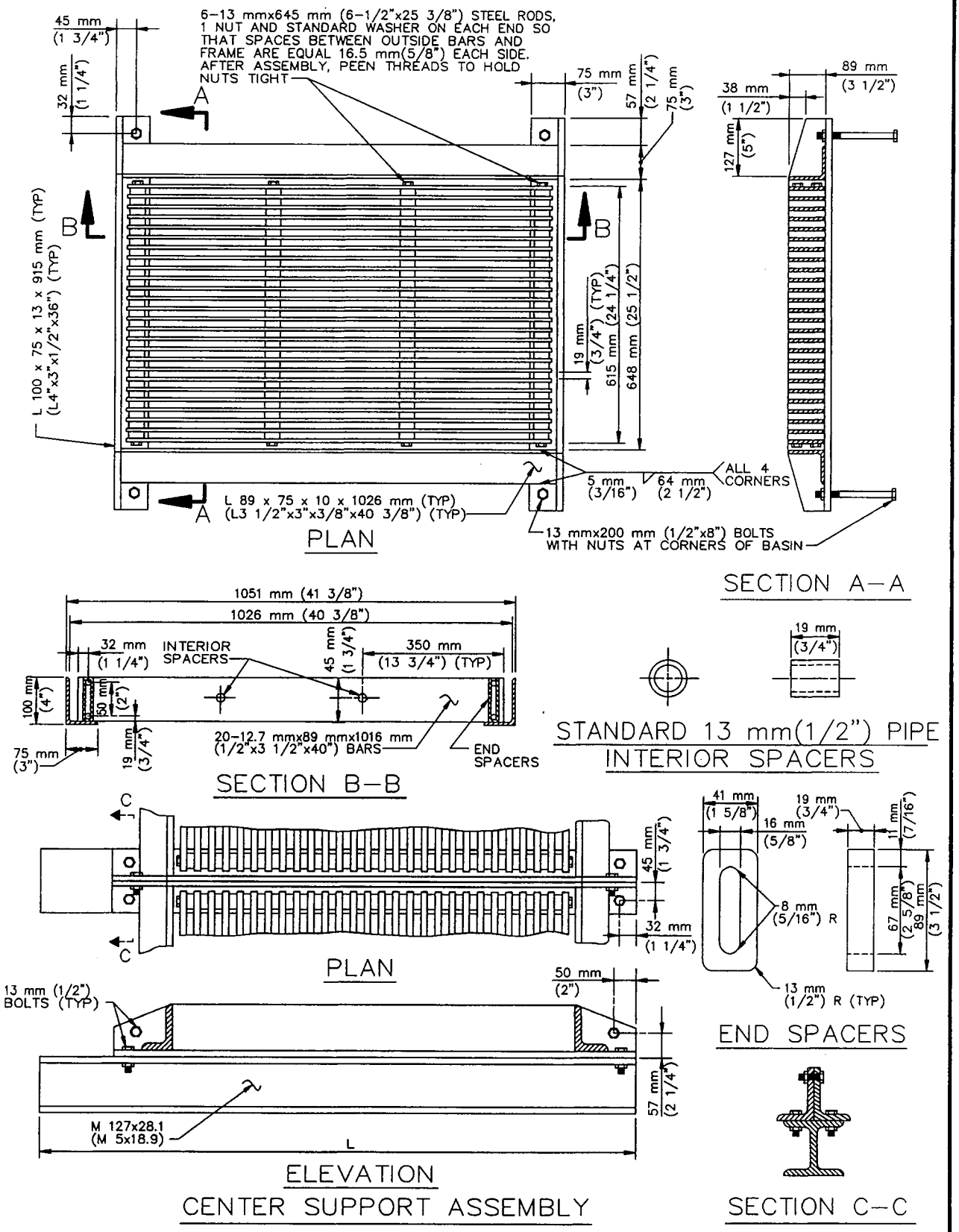

STANDARD PLANS FOR PUBLIC WORKS CONSTRUCTION

PROMULGATED BY THE PUBLIC WORKS STANDARDS, INC., GREENBOOK COMMITTEE 1984 REV. 1993, 1996

FRAME AND GRATING FOR CATCH BASINS

USE WITH STANDARD SPECIFICATIONS FOR PUBLIC WORKS CONSTRUCTION

STANDARD PLAN METRIC **311-2**

SHEET 1 OF 2

NOTES:

1. ALL PARTS SHALL BE STEEL, EXCEPT THAT END SPACERS MAY BE CAST IRON.
2. ALL PARTS SHALL BE GALVANIZED AFTER FABRICATION, EXCEPT THAT GRATINGS SHALL BE ASSEMBLED AFTER COMPONENT PARTS ARE GALVANIZED.
3. ALL DIMENSIONS ARE FINISHED DIMENSIONS AND INCLUDE GALVANIZING.
4. ALL BOLT HOLES SHALL BE 16 mm (5/8") DIAMETER.
5. ALL THREADS SHALL BE NATIONAL COARSE SERIES (NC).
6. CENTER SUPPORT ASSEMBLY REQUIRED WHEN TWO OR MORE GRATINGS ARE SPECIFIED ON PLANS.

   L = 1626 mm (64") FOR CURB OPENING CATCH BASIN WITH GRATING(S) AND DEBRIS SKIMMER (SPPWC 301).

   L = 1118 mm (44") FOR CURB OPENING CATCH BASIN WITH GRATING(S) (SPPWC 320.)

   L = 914 mm (36") FOR CURBSIDE GRATING CATCH BASIN (SPPWC 303).

   L = 914 mm (36") FOR GRATING CATCH BASIN–ALLEY (LONGITUDINAL) (SPPWC 304).

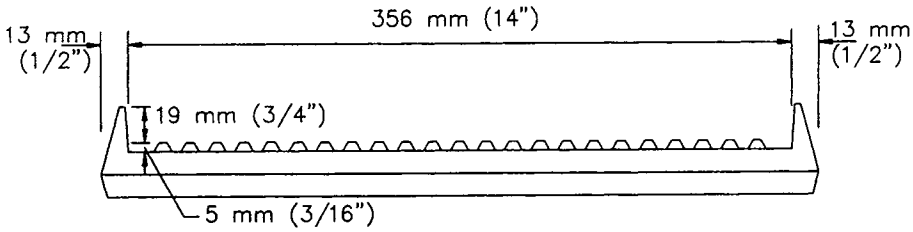

FRONT

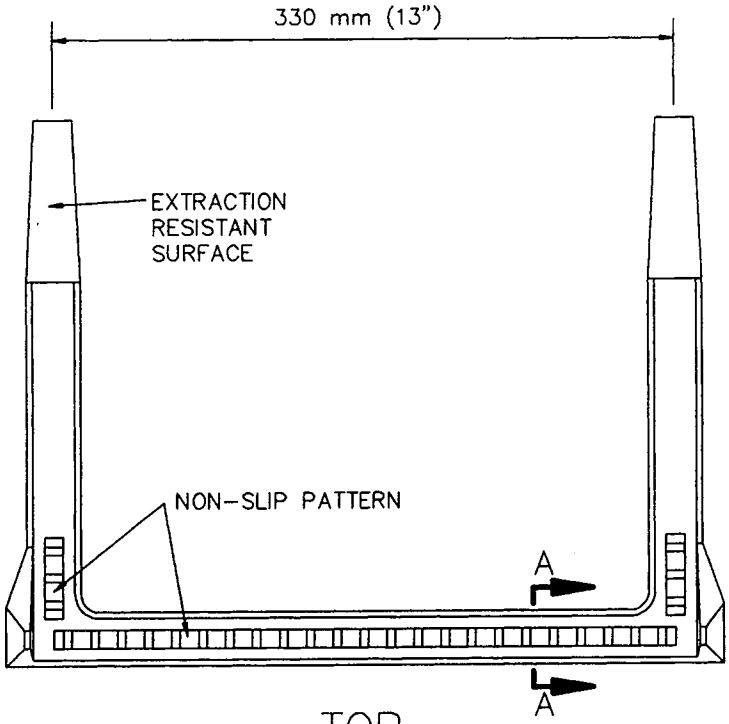

TOP

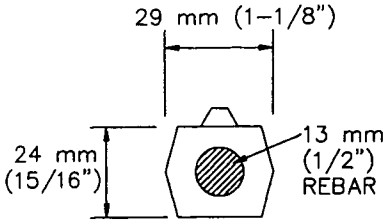

SECTION A-A

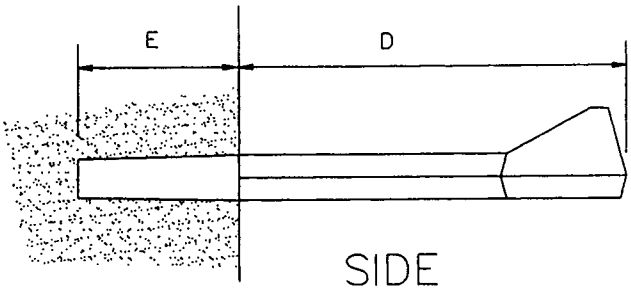

SIDE

STANDARD PLANS FOR PUBLIC WORKS CONSTRUCTION

PROMULGATED BY THE
PUBLIC WORKS STANDARDS INC.
GREENBOOK COMMITTEE
1991
REV. 1996

POLYPROPYLENE PLASTIC STEP

USE WITH STANDARD SPECIFICATIONS FOR PUBLIC WORKS CONSTRUCTION

STANDARD PLAN
METRIC
636-1

SHEET 1 OF 2

NOTES:

1. STEPS SHALL BE STEEL-REINFORCED COPOLYMER POLYPROPYLENE PLASTIC CONFORMING TO:

   (A) ASTM D478 AND C497, EXCEPT THAT THE MINIMUM HORIZONTAL PULLOUT LOAD SHALL BE 6.7 kN (1500 LBS).
   (B) ASTM A615 GRADE 60 DEFORMED REINFORCING STEEL BAR.
   (C) CALIFORNIA CODE OF REGULATIONS TITLE 8, GENERAL INDUSTRY SAFETY ORDERS.

2. STEPS SHALL BE CAPABLE OF WITHSTANDING AN IMPACT LOAD OF 95 N.m (70 FT-LBS) AT -7°C (20°F) WITHOUT CRACKING OR FRACTURING.

3. THE MINIMUM TOTAL CROSS-SECTIONAL AREA OF THE EXPOSED PORTION OF THE STEP, INCLUDING THE DEFORMED STEEL BAR AND EXCLUDING THE NON-SLIP TREAD SURFACE, SHALL BE 645 mm2 (1.0 SQ IN).

4. THE ENTIRE POLYPROPYLENE PLASTIC MATERIAL SURROUNDING THE REINFORCING STEEL BAR SHALL BE CAST MONOLITHICALLY. MINIMUM COVER SHALL BE 5 mm (3/16").

5. A CERTIFICATION OF COMPLIANCE WITH THE REQUIREMENTS OF NOTES 1 THROUGH 4 PREPARED BY AN INDEPENDENT CERTIFIED LABORATORY SHALL BE SUBMITTED TO THE ENGINEER CONCURRENTLY WITH A REQUEST FOR APPROVAL.

6. E = 86 mm (3-3/8"). FOR VAULTS AND MANHOLES, D = 140 mm (5-1/2"). FOR OTHER INSTALLATIONS, D = 190 mm (7-1/2"). THESE DIMENSIONS MAY BE PLUS OR MINUS 6 mm (1/4").

7. STEPS SHALL BE EVENLY SPACED. MAXIMUM VERTICAL SPACING OF STEPS SHALL BE 400 mm (16"), WITH THE BOTTOM STEP A MAXIMUM OF 600 mm (2') ABOVE FLOOR OR SHELF.

8. IF TAPERED STEPS ARE INSTALLED INTO STRAIGHT DRILLED OR FORMED HOLES, APPROVED NON-SHRINK GROUT SHALL BE INJECTED INTO THE HOLE PRIOR TO INSTALLATION. HOLES SHALL BE STRAIGHT AND PARALLEL. EXCEPT AS OTHERWISE NOTED, STEPS SHALL BE INSTALLED IN ACCORDANCE WITH MANUFACTURER'S RECOMMENDED PROCEDURES.

9. A DROP STEP WITH A MINIMUM DROP OF 19 mm (3/4") MAY BE USED. THE DROP STEP SHALL MEET ALL OTHER CRITERIA OF THIS PLAN.

APPENDIX V
MANUFACTURER'S DRAWINGS

TECHNICAL DATA

4" ABS XFP PUMP

XFP 100E-CB1
4 Pole, 3 Phase, PE2

Date:	01/11		
Dwg:	DS-E01-024	Rev:	5

Submersible Motor Specifications, PE2 Frame

Motor Design		NEMA design B, squirrel cage induction
Motor Type		Fully enclosed Premium Efficiency submersible, IP68 protection rating
Motor Efficiency Standard and Rating		IEC 60034-30, IE3 rating
Motor Efficiency Test Protocol		IEC 60034-2-1
Insulation Materials		Class H, 180°C (356°F), copper windings
Motor Filling Medium		Air for wet pit installation, environmentally safe, non-toxic oil for dry pit installation, no cooling jacket required
Temperature Rise		Class A for wet pit installation, Class B for dry pit installation
Maximum Fluid Temperature		40°C (104°F) continuous, 50°C (122°F) intermittent
Motor Protection	**Thermal**	Normally closed bimetallic switch in each phase, connected in series, 140°C (284°F), +/- 5 °C opening temperature
	Leakage	ABS Sealminder moisture detection probe in seal sensing chamber
Sensing Chamber Filling Medium		Environmentally safe, non-toxic oil
Bearing Type	**Upper**	Single row ball permanently lubricated
	Lower	Double row angular contact permanently lubricated
Motor Starter Types		Suitable for use with across the line, electronic soft starters, and PWM type Variable Frequency Drives*
Maximum Starts per Hour		15, evenly spaced
Inverter Duty Rating		Motors meet NEMA MG1, part 31 requirements
Maximum Submergence		20 meters (65 feet)
Available Voltages		208, 230, 460, 600
Voltage Tolerance from Rated		+/-10%
Agency Approvals		Factory Mutual, CSA
Explosion Proof Rating		NEC 500 Class 1, Division 1, Group C & D, Class T3C max surface temp

*Output filters may be required on VFDs. See document **DS-E00-001** for details.

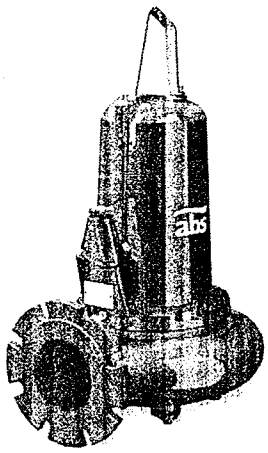

ABS submersible sewage pump XFP
Part of the ABS EffeX range

Premium Efficiency
without Compromise

Motor Ratings, PE2 Frame

Motor Model	Input Power (P1)	Rated Power Output (P2)	Nominal RPM	Rated Voltage	Full Load Amps	Locked Rotor Amps	NEMA Code Letter	NEMA Service Factor	Motor Efficiency at % Load			Power Factor at % Load		
									100	75	50	100	75	50
PE 75/4	8.2 kW	7.5 kW 10 HP	1760	208 230 460 600	30.6 27.7 13.8 10.6	177.8 160.8 80.4 61.6	H	1.3**	91.7	91.9	91.6	.742	.654	.534
PE 90/4	9.8kW	9 kW 12 HP	1760	208 230 460 600	34.9 31.5 15.8 12.1	232 210 105 80.5	H	1.3**	91.7	91.5	88.8	.78	.7	.56
PE 105/4	11.4 kW	10.5 kW 14.1 HP	1755	208 230 460 600	39.1 35.4 17.7 13.6	232 210 105 80.5	G	1.3**	92.4	92.6	90.9	.806	.754	.632

** For wet pit installation. Service factor is 1.15 for dry pit installation.

Cable Data, PE2 Frame

	Motor	Motor Voltage	Cable Type	Cable Nominal Dia. +/- .5mm (.02")
Power Cable	PE 75/4	208 volt	SOOW 8/4+16/3	25.4mm (1.0") diameter
		230 volt	SOOW 8/4+16/3	25.4mm (1.0") diameter
		460 volt	SOOW 12/7*	18.8mm (0.74") diameter
		600 volt	SOOW 14/7	18.3mm (0.72") diameter
Control Cable		All	Included in Power Cable	
Power Cable	PE 90/4	208 volt	SOOW 8/4+16/3	25.4mm (1.0") diameter
		230 volt	SOOW 8/4+16/3	25.4mm (1.0") diameter
		460 volt	SOOW 12/7*	18.8mm (0.74") diameter
		600 volt	SOOW 14/7	18.3mm (0.72") diameter
Control Cable		All	Included in Power Cable	
Power Cable	PE 105/4	208 volt	SOOW 8/4+16/3	25.4mm (1.0") diameter
		230 volt	SOOW 8/4+16/3	25.4mm (1.0") diameter
		460 volt	SOOW 10/7*	20.7mm (0.82") diameter
		600 volt	SOOW 12/7	18.8mm (0.74") diameter
Control Cable		All	Included in Power Cable	
Cable Length	Standard: 15m (49 feet)		Optional: 20m (65 feet), 30m (98 feet) - Consult Factory for Longer Lengths	

* Special versions ordered with cable suitable for both 230 volt and 460 volt operation will be equipped with the cable type and diameter shown in the "230 volt" section of the table

Pump Data

Discharge Size	4" flanged, compatible with 4" class 125 ANSI flanges				
Suction Size	4" flanged, compatible with 4" class 125 ANSI flanges, threaded for 8 x 5/8-11 UNC bolts, 28mm (1.1") deep				
Volute pressure rating	10 bar (145 psi)				
Impeller Type	Semi-open, 1-vane, ContraBlock Plus w/ Seal Protection System				
Impeller Size	.1	.2	.3	.4	.5
Solids Passage Size	80mm (3.14")	80mm (3.14")	80mm (3.14")	80mm (3.14")	80mm (3.14")
Impeller DIA	250mm (9.84")	240mm (9.4")	225mm (8.6")	215mm (8.5")	195mm (7.7")
Impeller Weight	9.7 Kg (21.3lb)	8.8 Kg (19.4lb)	8.4 Kg (18.5lb)	6.6 Kg (14.5 lb)	6.3 Kg (13.9 lb)
Min Recommended Flow, GPM	160	160	160	130	130

Materials of Construction

		Standard	Optional
Motor Housing		Cast Iron EN-GJL-250 (ASTM A-48, Class 35B)	
Oil Chamber		Cast Iron EN-GJL-250 (ASTM A-48, Class 35B)	
Seal Plate		Cast Iron EN-GJL-250 (ASTM A-48, Class 35B)	
Impeller		Cast Iron EN-GJL-250 (ASTM A-48, Class 35B)	
Volute		Cast Iron EN-GJL-250 (ASTM A-48, Class 35B)	
Bottom Plate CB		Cast Iron EN-GJL-250 (ASTM A-48, Class 35B)	
Cable Entry Casting		Cast Iron EN-GJL-250 (ASTM A-48, Class 35B)	
Pump and Motor Shaft		Stainless Steel 1.4021 (AISI 420 SS)	
External Hardware		Stainless Steel 1.4401 (AISI 316 SS)	
Lifting Hoop		Stainless Steel 1.4401 (AISI 316 SS)	
O-Rings		Nitrile (Buna-N)	
Cable Glands		Nitrile (Buna-N)	
Tandem Mechanical Seal	Lower	Silicon Carbide on Silicon Carbide	
	Upper	Silicon Carbide on Silicon Carbide	
Coating		Two part epoxy, black, 120µm (4.7 mil) DFT	Two part epoxy, black, 400µm (15.7 mil) DFT

General Data

	PE 75/4	PE 90/4	PE 105/4
Overall Height	762mm (30")	762mm (30")	832mm (32.8")
Pump Weight	177 kg (390 lb)	177 kg (390 lb)	188.5 kg (415.6 lb)

MODULAR WETLAND SYSTEMS - LINEAR FLOW CONTROL VAULT

FLOW RATES - FLOW BASED

PRIMARY PEAK TREATMENT FLOW RATE
= 25 GPM

INSTALL OFFLINE/BYPASS HIGHER FLOWS EXTERNALLY

SPECIFICATIONS

INSTALL AT SURFACE

O.D. DIMENSIONS
= 5' X 5' X 5.9'

TOP OF VAULTE TO INVERT OUT
= 4.92' (MINIMUM)

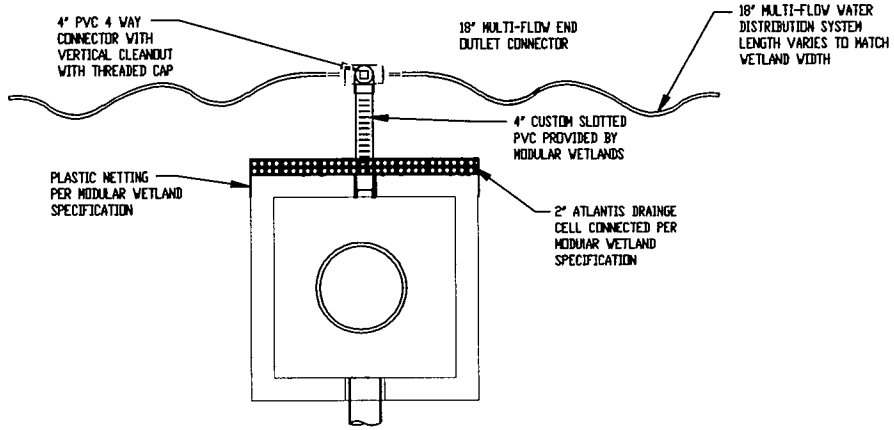

PLAN VIEW

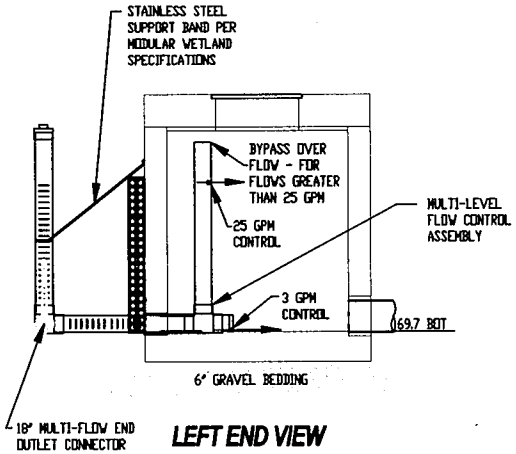

LEFT END VIEW

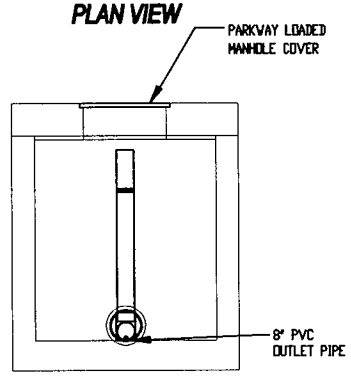

ELEVATION VIEW

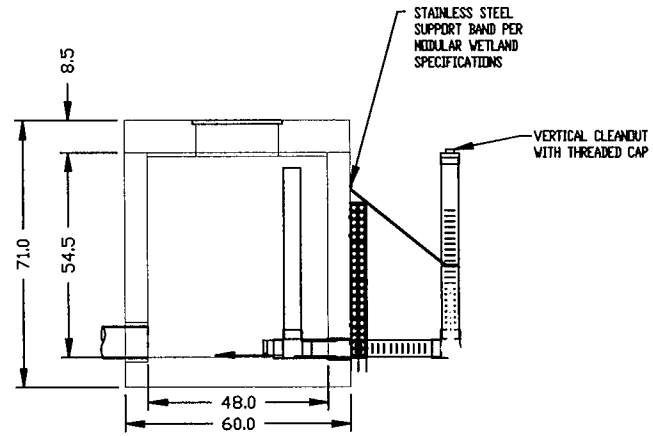

RIGHT END VIEW

INSTALLATION NOTES:

1. INSTALL UNIT ON LEVEL BED OF GRAVEL OF AT LEAST 6" IN DEPTH.
2. CONCRETE 28 DAY COMPRESSIVE STRENGTH fc=5,000 PSI.
3. REINFORCING:ASTM A-615, GRADE 60.
4. SUPPORTS AN H20 LOADING AS INDICATED BY AASHTO.
5. ALL WALLS ARE 6" THICK, BAFFLES ARE 4" THICK BOTTOM 8" THICK, TOP 10" THICK.
6. JOINT SEALANT: BUTYL RUBBER SS-S-00210

Patent No. 7,425,262

THIS IS A PATENTED DESIGN
USING ELEMENTS OR COMBINATION OF ELEMENTS IS AN INFRINGEMENT ON PATENTS AND LEGAL ACTION WILL BE TAKEN AGAINST THE INVOLVED PARTIES

MODULAR WETLAND SYSTEMS INC.
P.O. BOX 869
OCEANSIDE, CA 92049
www.ModularWetlands.com

PROPRIETARY AND CONFIDENTIAL
THE INFORMATION CONTAINED IN THIS DRAWING IS THE SOLE PROPERTY OF MODULAR WETLAND SYSTEMS INC. ANY REPRODUCTION IN PART OR AS A WHOLE WITHOUT THE WRITTEN PERMISSION OF MODULAR WETLAND SYSTEMS INC. IS PROHIBITED.

	NAME	DATE
DRAWN	JJC	7-21-09
EDITED		

COMMENTS:

TITLE: MWS LINEAR - VAULT TYPE

SIZE	DWG. NO.	REV
A	MWS-L-V	

SCALE 1:50 | UNITS = INCHES | SHEET 1 OF 1

MODULAR WETLAND SYSTEMS – LINEAR

FLOW RATES - FLOW BASED

PRIMARY PEAK TREATMENT FLOW RATE
= 25 GPM

INSTALL OFFLINE/BYPASS HIGHER FLOWS EXTERNALLY

SPECIFICATIONS

INSTALL AT SURFACE

O.D. DIMENSIONS
= 110' x 40' x 3.7' AVG

WETLAND MEDIA VOID RATIO
= .48

RUNOFF STORAGE CAPACITY
=7,814 CU FT
OR 58,451 GALLONS

RATE OF 25 GPM = 1500 GPH = 36000 GPD

RETENTION TIME = 58451/36000 = 1.62 DAYS

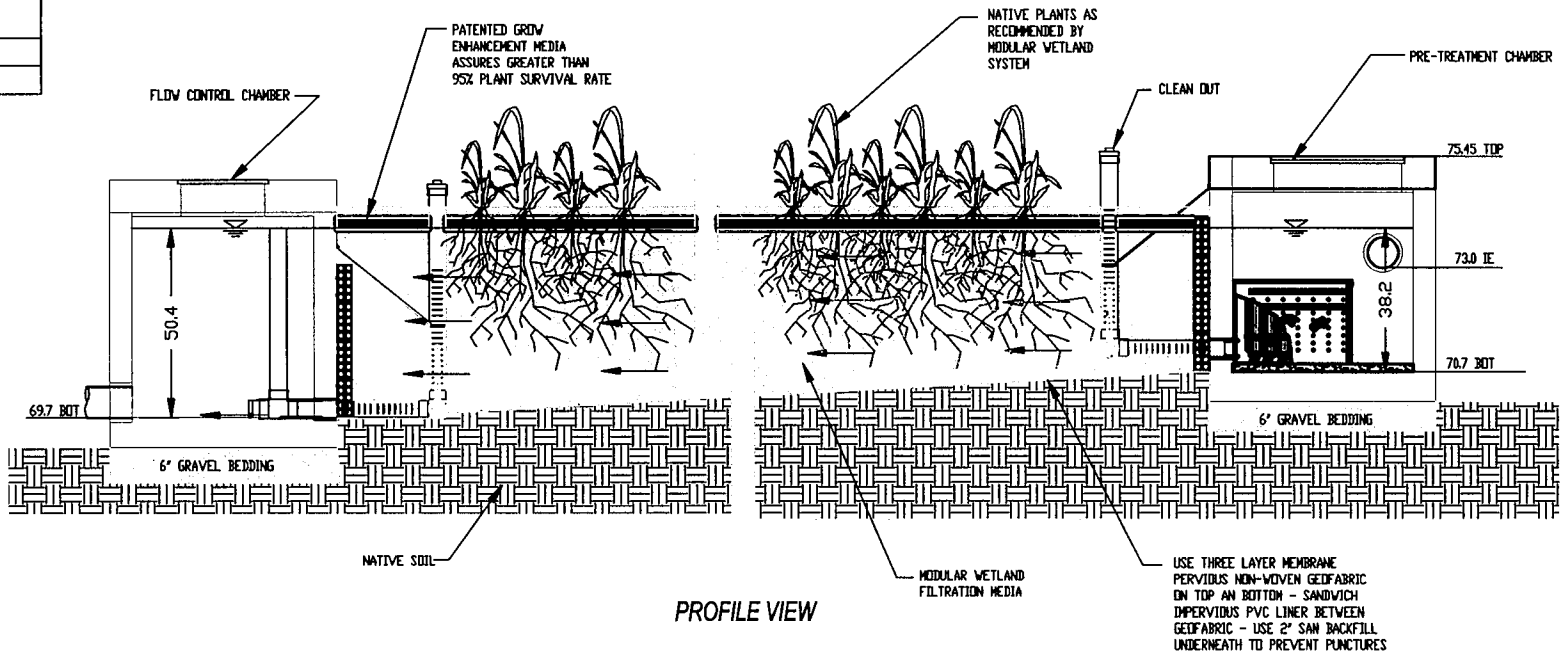

PROFILE VIEW

Patent No. 7,425,262

THIS IS A PATENTED DESIGN
USING ELEMENTS OR COMBINATION OF ELEMENTS IS AN INFRINGEMENT ON PATENTS AND LEGAL ACTION WILL BE TAKEN AGAINST THE INVOLVED PARTIES

MODULAR WETLAND SYSTEMS INC.
P.O. BOX 869
OCEANSIDE, CA 92049
www.ModularWetlands.com

	NAME	DATE
DRAWN	JJC	7-21-09
EDITED		

PROPRIETARY AND CONFIDENTIAL
THE INFORMATION CONTAINED IN THIS DRAWING IS THE SOLE PROPERTY OF MODULAR WETLAND SYSTEMS INC. ANY REPRODUCTION IN PART OR AS A WHOLE WITHOUT THE WRITTEN PERMISSION OF MODULAR WETLAND SYSTEMS INC. IS PROHIBITED.

COMMENTS:

TITLE: MWS LINEAR – VAULT TYPE

SIZE	DWG. NO.	REV
A	MWS-L-V	

SCALE 1:50 | UNITS = INCHES | SHEET 1 OF 1

MODULAR WETLAND SYSTEMS – LINEAR PRE-TREATMENT VAULT

FLOW RATES - FLOW BASED

PRIMARY PEAK TREATMENT FLOW RATE
= 25 GPM

INSTALL OFFLINE/BYPASS HIGHER FLOWS EXTERNALLY

SPECIFICATIONS

INSTALL AT SURFACE

O.D. DIMENSIONS
= 22' X 5' X 5.4'

TOP OF VAULT TO INVERT OUT
= 4.75'

STORAGE CAPACITY
= 1000 LBS OR 23.5 CF

BioMediaGREEN CARTRIDGE MEDIA FILTER
30 SQAURE FEET MEDIA SURFACE AREA PER CARTRIDGE

14 CARTRIDGES TOTAL = 420 SQ FT SURFACE AREA

PEAK TREATMENT FLOW RATE = 25 GPM

FILTER MEDIA LOADING RATE = 25/420 = .059 GPM/SQ FT	REPLACE MEDIA EVERY 24 MONTHS

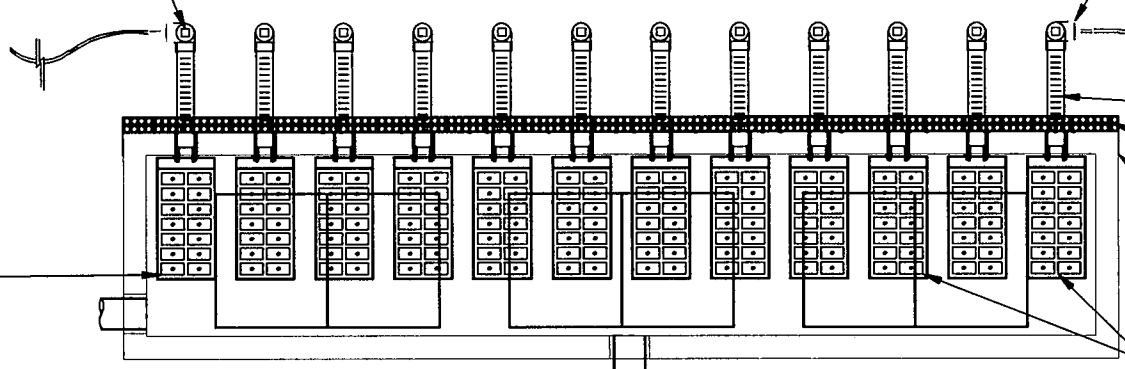

PLAN VIEW

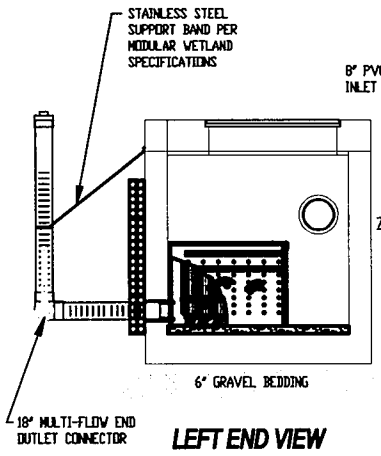

LEFT END VIEW

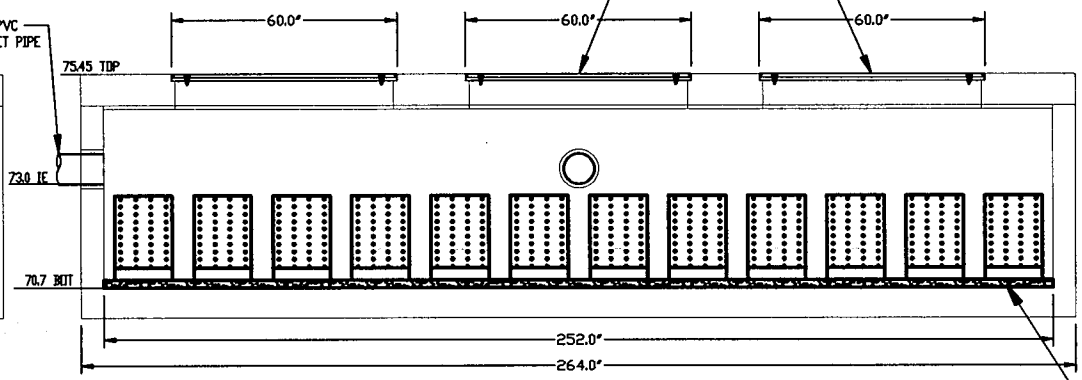

ELEVATION VIEW

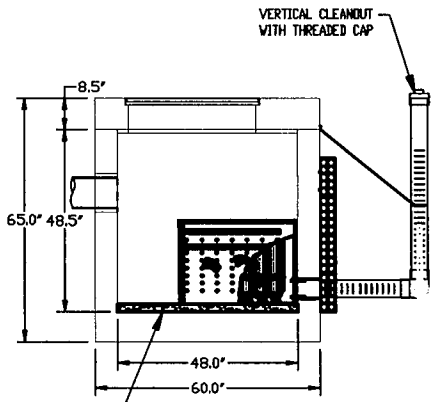

RIGHT END VIEW

INSTALLATION NOTES:

1. INSTALL UNIT ON LEVEL BED OF GRAVEL OF AT LEAST 6" IN DEPTH.
2. CONCRETE 28 DAY COMPRESSIVE STRENGTH fc=5,000 PSI.
3. REINFORCING:ASTM A-615, GRADE 60.
4. SUPPORTS AN H20 LOADING AS INDICATED BY AASHTO.
5. ALL WALLS ARE 6" THICK, BAFFLES ARE 4" THICK BOTTOM 8" THICK, TOP 10" THICK.
6. JOINT SEALANT: BUTYL RUBBER SS-S-00210

Patent No. 7,425,262

THIS IS A PATENTED DESIGN
USING ELEMENTS OR COMBINATION OF ELEMENTS IS AN INFRINGEMENT ON PATENTS AND LEGAL ACTION WILL BE TAKEN AGAINST THE INVOLVED PARTIES

MODULAR WETLAND SYSTEMS INC.
P.O. BOX 869
OCEANSIDE, CA 92049
www.ModularWetlands.com

PROPRIETARY AND CONFIDENTIAL
THE INFORMATION CONTAINED IN THIS DRAWING IS THE SOLE PROPERTY OF MODULAR WETLAND SYSTEMS INC. ANY REPRODUCTION IN PART OR AS A WHOLE WITHOUT THE WRITTEN PERMISSION OF MODULAR WETLAND SYSTEMS INC. IS PROHIBITED.

	NAME	DATE
DRAWN	JJC	7-21-09
EDITED		

COMMENTS:

TITLE: MWS LINEAR – VAULT TYPE

SIZE	DWG. NO.	REV
A	MWS-L-V	
SCALE 1:50	UNITS = INCHES	SHEET 1 OF 1

MODULAR WETLAND SYSTEMS – LINEAR

FLOW RATES - FLOW BASED

PRIMARY PEAK TREATMENT FLOW RATE
= 25 GPM

INSTALL OFFLINE/BYPASS HIGHER FLOWS EXTERNALLY

SPECIFICATIONS

INSTALL AT SURFACE

O.D. DIMENSIONS
= 110' x 40' x 3.7' AVG

WETLAND MEDIA VOID RATIO
= .48

RUNOFF STORAGE CAPACITY
=7,814 CU FT
OR 58,451 GALLONS

RATE OF 25 GPM = 1500 GPH = 36000 GPD

RETENTION TIME = 58451/36000 = 1.62 DAYS

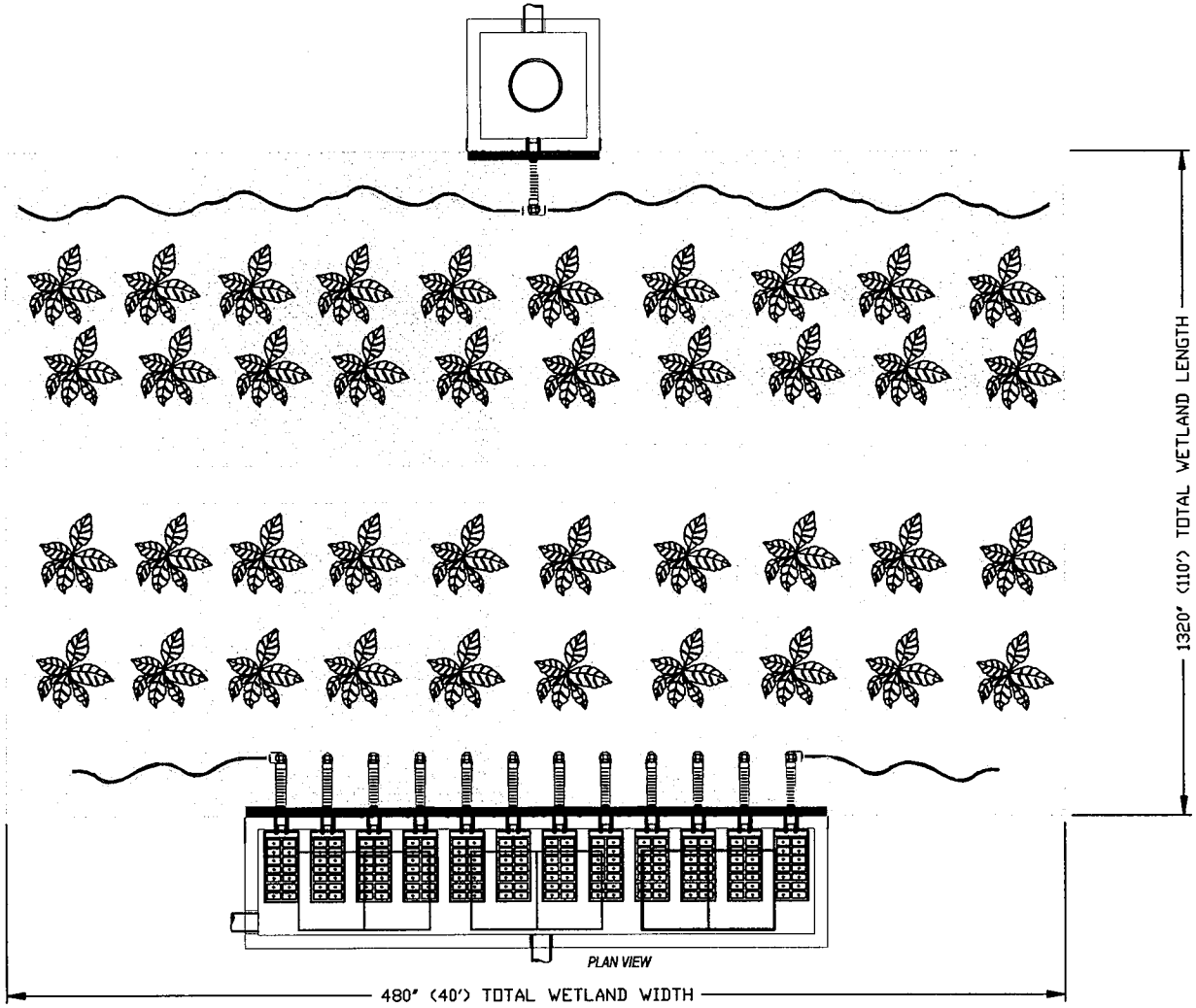

Patent No. 7,425,262

THIS IS A PATENTED DESIGN
USING ELEMENTS OR COMBINATION OF ELEMENTS IS AN INFRINGEMENT ON PATENTS AND LEGAL ACTION WILL BE TAKEN AGAINST THE INVOLVED PARTIES

MODULAR WETLAND SYSTEMS INC.
P.O. BOX 869
OCEANSIDE, CA 92049
www.ModularWetlands.com

	NAME	DATE
DRAWN	JJC	7-21-09
EDITED		

TITLE: MWS LINEAR – VAULT TYPE

PROPRIETARY AND CONFIDENTIAL
THE INFORMATION CONTAINED IN THIS DRAWING IS THE SOLE PROPERTY OF MODULAR WETLAND SYSTEMS INC. ANY REPRODUCTION IN PART OR AS A WHOLE WITHOUT THE WRITTEN PERMISSION OF MODULAR WETLAND SYSTEMS INC. IS PROHIBITED.

COMMENTS:

SIZE	DWG. NO.	REV
A	MWS-L-V	

SCALE: NTS | UNITS = INCHES | SHEET 1 OF 1

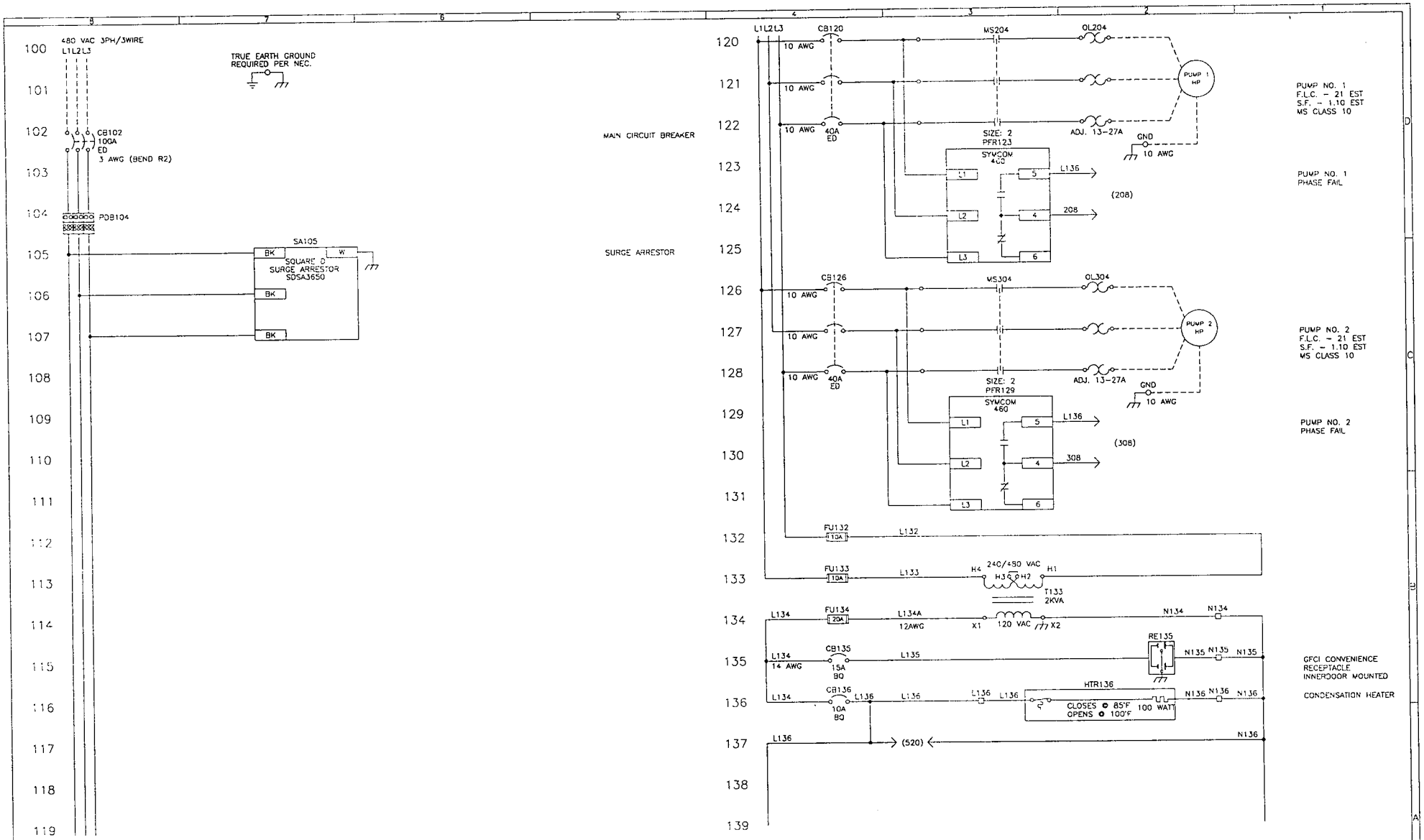

NOTES:
1) FOR A COMPLETE LIST OF DRAWINGS AND PARTS REFER TO THE TABLE OF CONTENTS AND THE BILL OF MATERIALS.
2) GROUNDING LUG TO BE GROUNDED BY CUSTOMER PER NEC.
3) PULL ANALOG SIGNAL WIRES AND LOW VOLTAGE DC WIRES IN METALLIC CONDUIT SEPARATE FROM POWER/LOAD WIRING.
4) SEE ELECTRICAL DEVICE FOR ELECTRICAL RATINGS.
5) REMOVE JUMPER FOR NON-SERVICE ENTRANCE RATED ENCLOSURE. ALL WIRES ARE 16 AWG UNLESS SPECIFIED.

STD: BORDER-0106-24X3601 | INTL REF: XXXXX | PLANT:1160 | BAR = 1" AT PLOT SCALE

REV	DESCRIPTION	DATE	DRN	CHKD	APVD	ECN
A	AS SUBMITTED	1/11				

COMPANY CONFIDENTIAL
THIS DOCUMENT AND ALL INFORMATION CONTAINED HEREIN AND PROPERTY OF SIEMENS AND/OR ITS AFFILIATES. THE DESIGN CONCEPTS AND INFORMATION CONTAINED HEREIN ARE PROPRIETARY TO SIEMENS AND ARE SUBMITTED IN CONFIDENCE. THEY ARE NOT PATENTABLE AND MUST BE USED ONLY FOR THE PURPOSE FOR WHICH THEY ARE SUBMITTED. CONTENTS CANNOT BE MADE PUBLIC, REPRODUCED, COPIED OR USED IN ANY OTHER MANNER WITHOUT THE EXPRESS WRITTEN CONSENT OF SIEMENS. IF NO CONTRACT HAS YET BEEN EXECUTED BETWEEN THE PARTIES, THIS DOCUMENT MUST BE RETURNED TO SIEMENS ON REQUEST. THIS DOCUMENT ALSO CONTAINS ALL COPIES AND EXTRACTS AND ALL RELATED NOTES AND ANALYSES MUST BE RETURNED TO SIEMENS OR DESTROYED, AS INSTRUCTED BY SIEMENS. ACCEPTANCE OF THE DELIVERY OF THIS DOCUMENT CONSTITUTES AGREEMENT TO THESE TERMS AND CONDITIONS.

		DATE
DESIGNER		1/11
CHECKER		1/11
ENGINEER		1/11
MANAGER		1/11

FILE: F15654-001-E24-001-A
SCALE: NONE

TITLE: POWERPACK EXPRESS FP4 INCOMING POWER DUPLEX PUMP -MODIFY TO TRIPLEX PANEL 001

CLIENT: MARDONA MARSHLAND CITY OF TORRANCE, CA

SIEMENS Water Technologies Control Systems Products PH: 651-766-2700

PROJECT	CODE	DRAWING	SHEET	REV
F15654	001	E04	1 OF 7	A

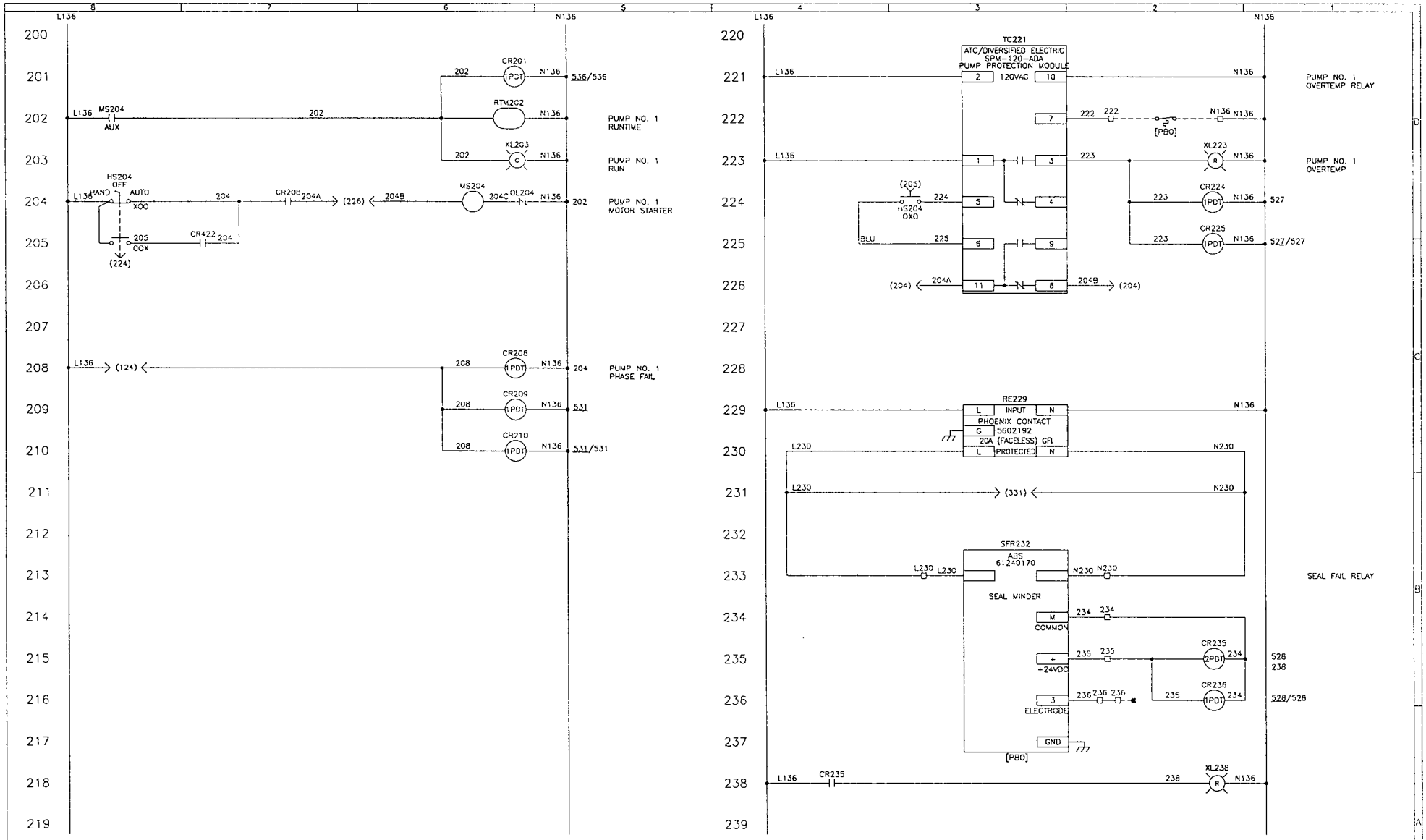

A	AS SUBMITTED	1/11					
REV	DESCRIPTION	DATE	DWN	CHKD	APVD	EDN	

COMPANY CONFIDENTIAL
THIS DOCUMENT AND ALL INFORMATION CONTAINED HEREIN ARE THE PROPERTY OF SIEMENS AND/OR ITS AFFILIATES. THE DESIGN CONCEPTS AND INFORMATION CONTAINED HEREIN ARE PROPRIETARY TO SIEMENS AND ARE SUBMITTED IN CONFIDENCE ONLY FOR USE IN CONNECTION WITH THE SALE OF SIEMENS EQUIPMENT. THE PURPOSE FOR WHICH THIS DOCUMENT IS EXPRESSLY LOANED, THIS MUST NOT BE DISCLOSED, REPRODUCED, LOANED OR USED IN ANY OTHER MANNER WITHOUT THE EXPRESS WRITTEN CONSENT OF SIEMENS. SIEMENS RETAINS THE RIGHT OF OWNERSHIP AND OWNERSHIP OF THIS DOCUMENT AND ALL RIGHTS UNDER ANY COPYRIGHT, PATENT OR OTHER RIGHTS OF INVENTION, THE DISCLOSURE OF WHICH, THE SENDING OF INVOICES, THE DELIVERY GOODS WITH ALL DRAWINGS AND ESTIMATES, AND ALL RELATED NOTES AND ANALYSES, MUST BE RESTRICTED TO RECIPIENTS AND CONTRACTORS ACCEPTABLE TO SIEMENS AND SUBJECT TO SIEMENS' CONDITIONS OF SALE OR IN THE ABSENCE OF SUCH CONDITIONS, AGREEMENT TO THESE TERMS AND CONDITIONS.

DESIGNER	DATE	1/11
CHECKER	DATE	1/11
ENGINEER	DATE	1/11
MANAGER	DATE	1/11
FILE	11363-001-G4-002-A	
SCALE	NONE	

TITLE: PUMP 1 CONTROL
DUPLEX PUMP -MODIFY TO TRIPLEX
PANEL 001

CLIENT: MARDONA MARSHLAND
CITY OF TORRANCE, CA

SIEMENS
Water Technologies
Control Systems Products
PH: 651-766-7700

PROJECT	CODE	DRAWING	SHEET	REV
F15654	001	E04	2 OF 7	A

STD: BORDER-0108-24X36D1 | INTL REV: XXXXX | PLANT:1160 | BAR = 1" AT PLOT SCALE

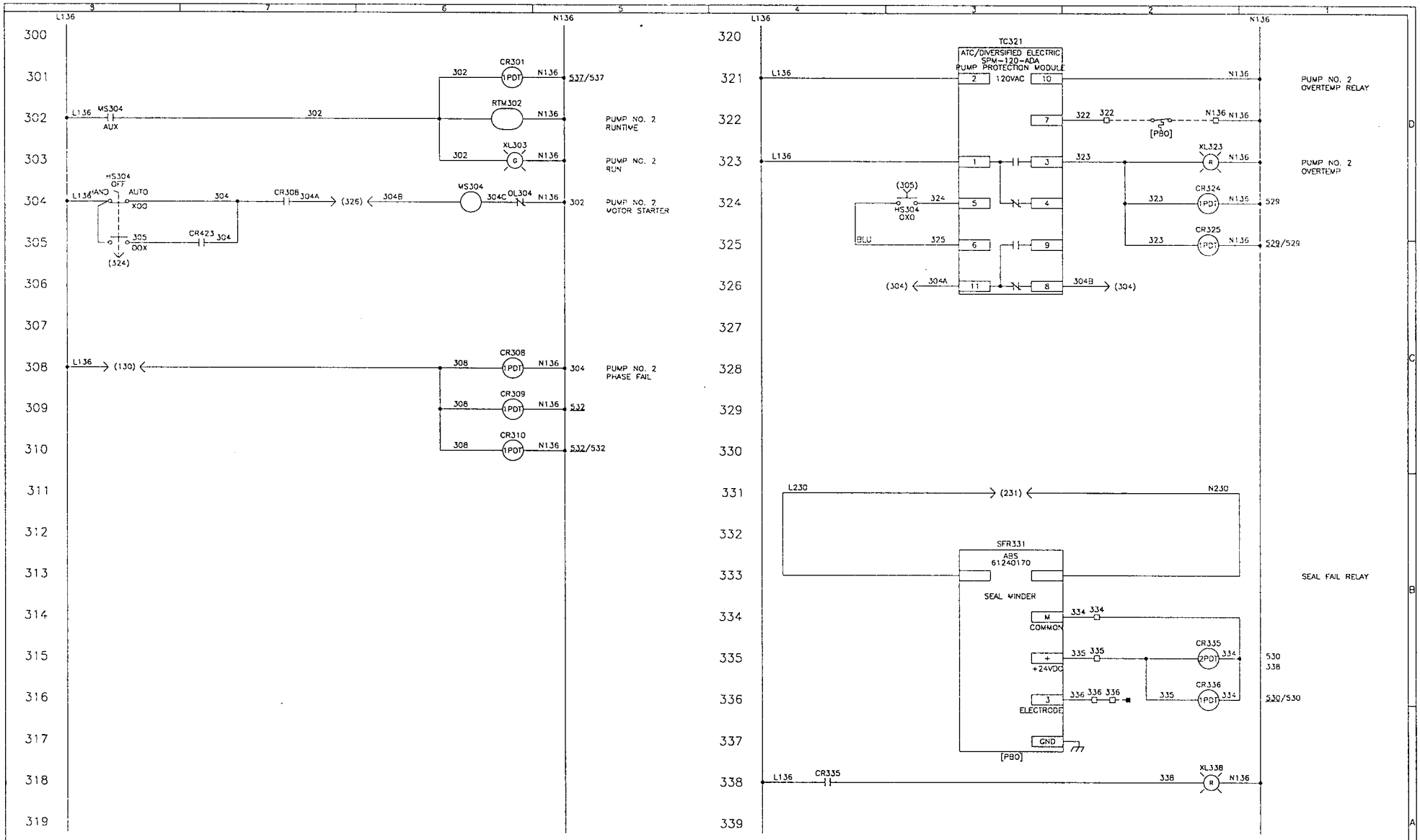

A	AS SUBMITTED	1/11					
REV	DESCRIPTION	DATE	DWN	CHKD	APVD	CH	

COMPANY CONFIDENTIAL
THIS DOCUMENT AND ALL INFORMATION CONTAINED HEREIN ARE THE PROPERTY OF SIEMENS AND/OR THE CLIENT. THEY CONTAIN CONCEPTS AND REFERENCES DISCLOSED IN CONFIDENCE. THEY ARE NOT TRANSFERABLE AND MUST BE USED ONLY FOR THE PURPOSE FOR WHICH THE DOCUMENT IS CONTRACTED. THEY MUST NOT BE DISCLOSED TO THIRD PARTIES WITHOUT WRITTEN CONSENT. THE COPYRIGHT OF SIEMENS IS NO BASIS FOR ANY RIGHT OF OWNERSHIP OF SIEMENS. THE DOCUMENT MUST BE RETURNED TO SIEMENS WITHOUT DELAY, IF THE PURPOSE FOR WHICH IT WAS SUBMITTED HAS BEEN REACHED. UPON THE SIGNING OF AN OFFICIAL PURCHASE ORDER, THE DOCUMENT BECOMES THE PROPERTY OF THE CLIENT. ACCEPTANCE OF THE DELIVERY OF THIS DOCUMENT CONSTITUTES AGREEMENT TO THESE TERMS AND CONDITIONS.

DESIGNER	DATE	1/11
CHECKER	DATE	1/11
ENGINEER	DATE	1/11
MANAGER	DATE	1/11
FILE	F15654-001-EH-001-A	
SCALE	NONE	

TITLE PUMP 2 CONTROL
DUPLEX PUMP -MODIFY TO TRIPLEX
PANEL 001

CLIENT MARDONA MARSHLAND
CITY OF TORRANCE, CA

SIEMENS Water Technologies
Control Systems Products
PH: 651-766-2700

PROJECT	CODE	DRAWING	SHEET	REV
F15654	001	E04	3 OF 7	A

STD. BORDER-C106-24X36D1 | INTL REF: XXXXX | PLANT:1160 | BAR = 1" AT PLOT SCALE

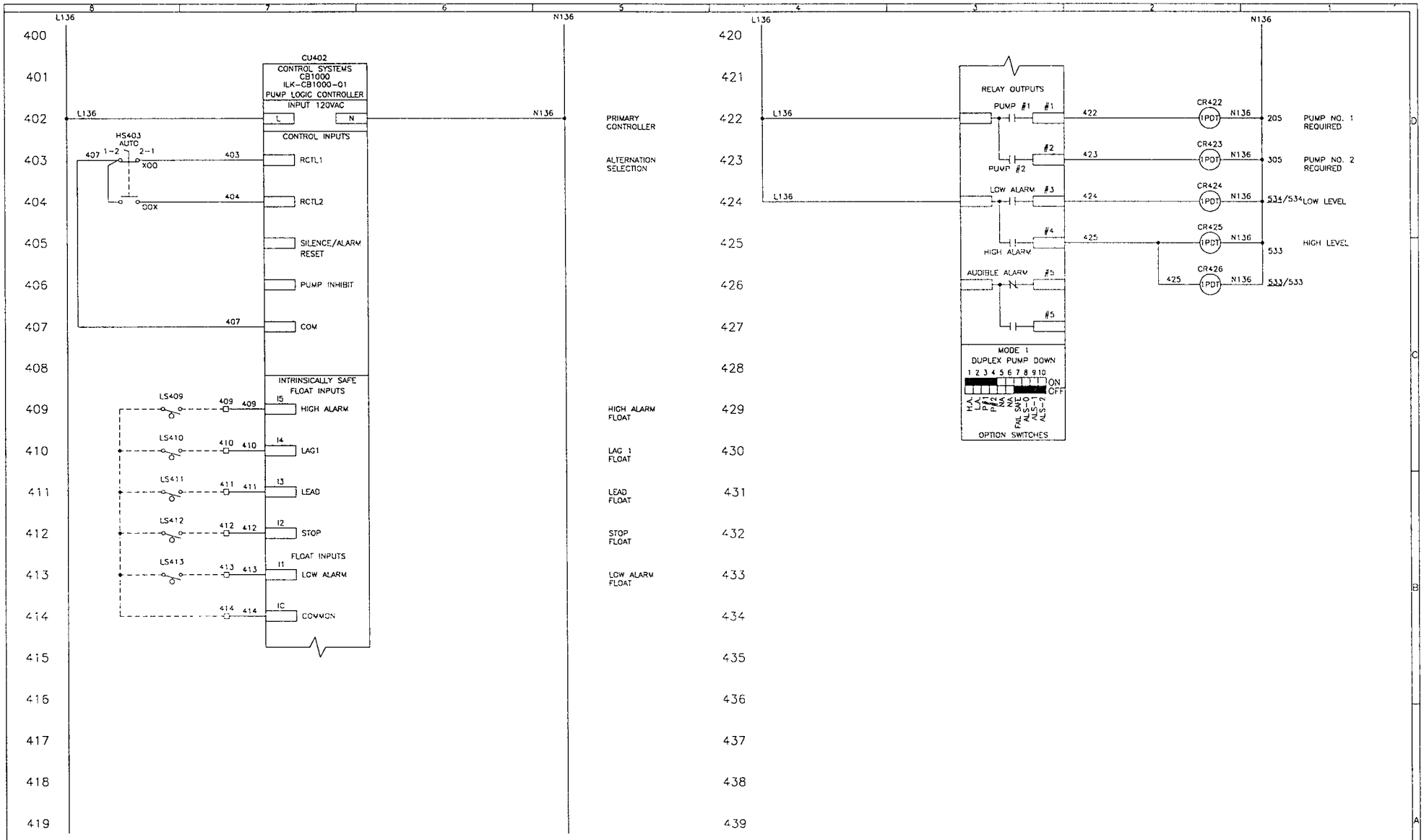

REV	DESCRIPTION	DATE	DWN	CHKD	APVD	ECN
A	AS SUBMITTED	1/11				

DESIGNER DATE 1/11
CHECKER DATE 1/11
ENGINEER DATE 1/11
MANAGER DATE 1/11
FILE: 15654-001-EO4-004-A
SCALE: NONE

TITLE: PRIMARY CONTROL – CB1000 (PUMP LOGIC) DUPLEX PUMP –MODIFY TO TRIPLEX PANEL 001

CLIENT: MARDONA MARSHLAND CITY OF TORRANCE, CA

SIEMENS Water Technologies Control Systems Products PH: 651-766-2700

PROJECT	CODE	DRAWING	SHEET	REV
F15654	001	E04	4 OF 7	A

STD: BORDER-0106-24X3601 INT. REF: XXXXX PLANT:1160 BAR = 1" AT PLOT SCALE

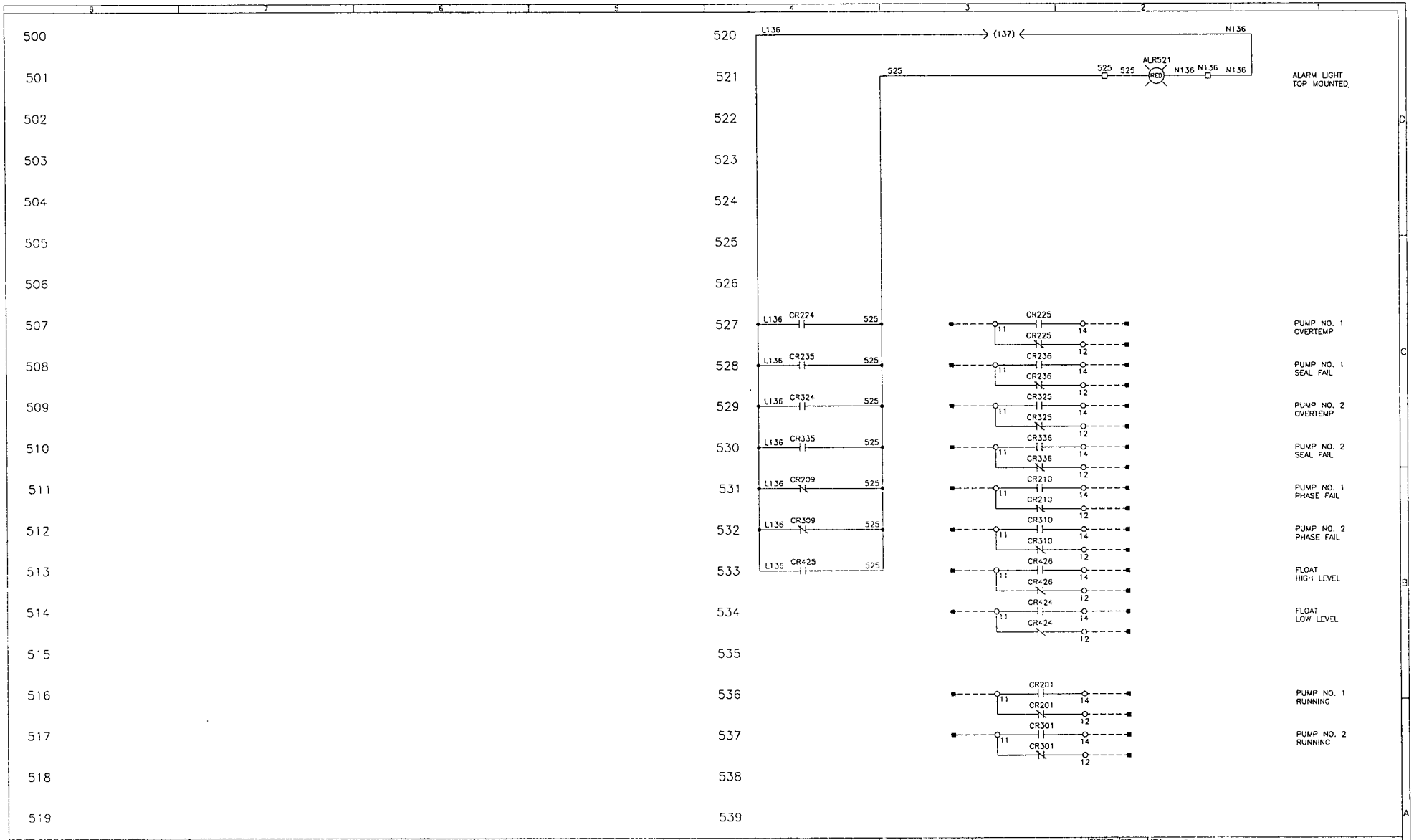

REV	DESCRIPTION	DATE	DWN	CHKD	APVD	ECN
A	AS SUBMITTED	1/11				

STD: BORDER-0106-24X3601 | INTL REF: XXXXX | PLANT:1160 | BAR = 1" AT PLOT SCALE

COMPANY CONFIDENTIAL
THIS DOCUMENT AND ALL INFORMATION CONTAINED HEREIN ARE THE PROPERTY OF SIEMENS AND/OR ITS AFFILIATES. THE DESIGN CONCEPTS AND INFORMATION CONTAINED HEREIN ARE PROPRIETARY TO SIEMENS AND ARE SUBMITTED IN CONFIDENCE. THEY ARE NOT TRANSFERABLE AND MUST BE USED ONLY FOR THE PURPOSE FOR WHICH THE DOCUMENT IS EXPRESSLY LOANED. THEY MUST NOT BE DISCLOSED, REPRODUCED, LOANED OR USED IN ANY OTHER WAY WITHOUT THE EXPRESS WRITTEN CONSENT OF SIEMENS. IF NO PART SHALL NEED BE USED IN ANY MANNER DETRIMENTAL TO THE INTEREST OF SIEMENS, ALL PATENT RIGHTS ARE RESERVED. UPON THE DEMAND OF SIEMENS, THIS DOCUMENT, ALONG WITH ALL COPIES AND EXTRACTS, AND ALL RELATED NOTES AND ANALYSES, MUST BE RETURNED TO SIEMENS OR DESTROYED, AS DESTROYED BY SIEMENS. ACCEPTANCE OF THE DELIVERY OF THIS DOCUMENT CONSTITUTES AGREEMENT TO THESE TERMS AND CONDITIONS.

	DATE
DESIGNER	1/11
CHECKER	1/11
ENGINEER	1/11
MANAGER	1/11

TITLE: ALARM
DUPLEX PUMP -MODIFY TO TRIPLEX
PANEL 001

CLIENT: MARDONA MARSHLAND
CITY OF TORRANCE, CA

SIEMENS Water Technologies Control Systems Products
PH: 651-766-2700

SCALE: NONE

PROJECT	CODE	DRAWING	SHEET	REV
F15654	001	E04	5 OF 7	A

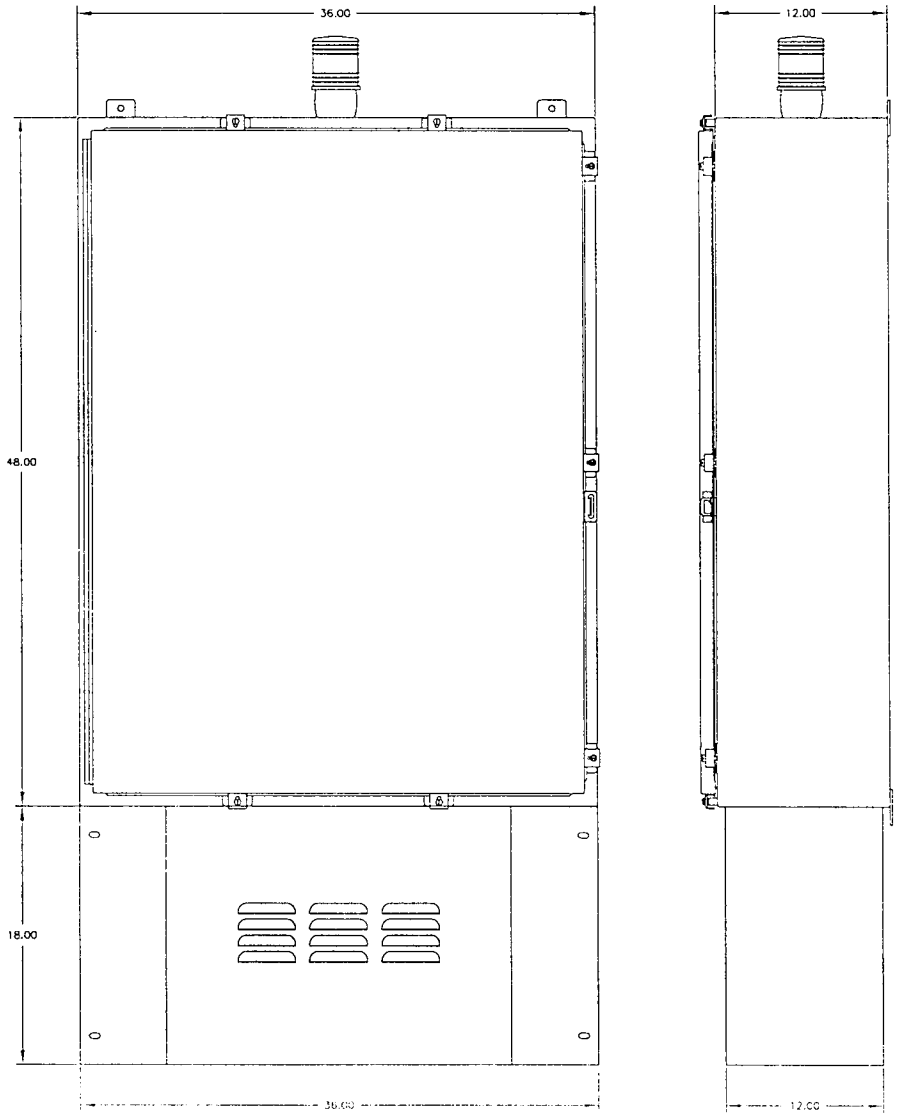

BACK PANEL SPECIFICATIONS	
MANUFACTURER	HOFFMAN
SIZE	45.00 X 33.00
FINISH	WHITE
PART NUMBER	A-48P36

ENCLOSURE SPECIFICATIONS	
MANUFACTURER	HOFFMAN
PART NUMBER	A-48H3612SSLP
SIZE	48.00 X 36.00 X 12.00
CONSTRUCTION	STAINLESS STEEL
TYPE	NEMA 4X
HINGED	LEFT
FINISH	BRUSHED
CUTOUT-ALRM	FP-EC-TL

REV	DESCRIPTION	DATE	DRN	CHKD	APVD	ECN
A	AS SUBMITTED	1/11				

COPYRIGHT CONFIDENTIAL
THIS DOCUMENT AND ALL INFORMATION CONTAINED HEREIN ARE THE PROPERTY OF SIEMENS WATER TECHNOLOGIES CORP. THE DESIGN CONCEPTS AND INFORMATION CONTAINED HEREIN ARE PROPRIETARY TO SIEMENS WATER TECHNOLOGIES CORP. AND MUST BE USED ONLY FOR THE PURPOSE FOR WHICH THE DOCUMENT IS EXPRESSLY LOANED. THEY MAY NOT BE DISCLOSED, REPRODUCED, LOANED OR USED IN ANY OTHER MANNER WITHOUT THE PRIOR WRITTEN CONSENT OF SIEMENS WATER TECHNOLOGIES CORP. IN ADDITION, TO THE EXTENT OF SIEMENS WATER TECHNOLOGIES CORP. THE SALE OF WARE OR SERVICES UNDER THE DOCUMENT, ALONG WITH ALL COPIES AND CONTENTS, IS EXPRESSLY LIMITED TO THE TERMS AND CONDITIONS OF SIEMENS WATER TECHNOLOGIES CORP. AS ATTACHED OR MADE AVAILABLE BY SIEMENS WATER TECHNOLOGIES CORP. ACCEPTANCE OF THE DOCUMENT CONSTITUTES AGREEMENT TO THESE TERMS AND CONDITIONS.

DRAWN	DATE 1/11	TITLE ENCLOSURE LAYOUT DUPLEX PUMP -MODIFY TO TRIPLEX PANEL 001
CHECKED	DATE 1/11	
ENGINEER	DATE 1/11	CLIENT MARDONA MARSHLAND CITY OF TORRANCE, CA
MANAGER	DATE 1/11	SIEMENS Water Technologies Control Systems Products PH: 651-766-2700
FILE F15654-001-001-001-A	SCALE	

PROJECT	CODE	DRAWING	SHEET	REV
F15654	001	E02	6 OF 7	A

STD: BORDER-C106-24X36D1 | INTL REF: XXXXX | PLANT:1160 | BAR = 1" AT PLOT SCALE

GENERAL PANEL ASSEMBLY INFORMATION

1. TYPICAL FOR PANEL QUANTITY: ONE
2. UL
   - [x] YES
   - [ ] NO
3. PANEL INSULATION
   - [x] NONE
   - [ ] 1/2" FOAM
   - [ ] 1/2" FOIL BACK
   - [ ] SEE NOTES
4. NAMEPLATES
   - [x] WHITE LETTERS ON BLACK BACKGROUND
   - [ ] BLACK LETTERS ON WHITE BACKGROUND
   - [ ] REVERSED ENGRAVED
   - [ ] SEE NOTES
5. DOOR PROP REQUIRED
   - [ ] YES
   - [x] NO
6. NAMEPLATE MOUNTING
   - [x] ADHESIVE
   - [ ] FASTENED WITH SCREWS
   - [ ] SEE NOTES
7. TERMINAL MARKERS FOR:
   - [ ] NONE
   - [ ] AB-SM 5x9
   - [ ] AB-SM 6x12
   - [ ] UK3N
   - [ ] AB-SM 5x12
   - [ ] SEE NOTES
   - [x] UK5N
   - [ ] AB-SM 6x9
   - [ ] UK6N
   - [ ] 6.35 HES FUSED TERMINALS
8. FUSE LABELS
   - [x] LABEL (PANDUIT TTC6Y-10)
   - [ ] ENGRAVED
   - [ ] SEE NOTES
9. DEVICE MARKERS
   - [x] LABEL (PANDUIT TTC6Y-10)
   - [ ] SEE NOTES
   - [ ] ENGRAVED
10. WIRE MARKERS
    - [x] SELF-LAMINATING
    - [ ] HEAT SHRINK
    - [ ] SEE NOTES
11. SPECIAL REQUIREMENTS
    - [x] NONE
    - [ ] SEE NOTES
12. TERMINAL AND WIRING SYMBOLOGY:
    REFER TO ELECTRICAL LEGEND SHEET
13. WIRE COLORS: REFER TO ELECTRICAL LEGEND SHEET

DUPLEX PUMP -MODIFY TO TRIPLEX

SERIAL NO.: F15654 PROD. CODE: CB100D (Pump Logic)

JOB NAME: MARDONA MARSHLAND

VOLTS: 480 HERTZ: 60 PHASE: 3 WIRE: 3

MAX. F.L.C.: 46.17 LARG. MTR.: 15 H.P. 21 F.L.C.

DRAWING NO.: F15654-001 PRESSURE:

SHORT CIRCUIT CURRENT:
kA RMS SYMMETRICAL
V MAXIMUM

INNERDOOR SPECIFICATIONS	
MANUFACTURER	CONTROL SYSTEMS
SIZE	44.00 X 32.75
CONSTRUCTION	ALUMINUM
HINGED	LEFT

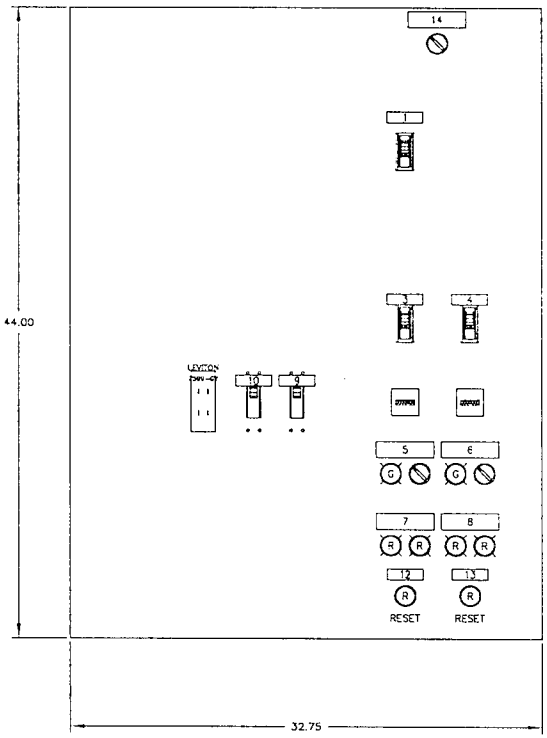

1 MAIN A1

3 PUMP NO. 1 A1

4 PUMP NO. 2 A1

5 PUMP NO. 1 RUNNING HAND OFF /RESET AUTO C1

6 PUMP NO. 2 RUNNING HAND OFF /RESET AUTO C1

7 PUMP NO. 1 SEAL FAIL OVERTEMP C1

8 PUMP NO. 2 SEAL FAIL OVERTEMP C1

9 CONTROL POWER A1

10 CONVENIENCE RECEPTACLE A1

12 PUMP NO. 1 OVERLOAD RESET A1

13 PUMP NO. 2 OVERLOAD RESET A1

14 ALTERNATION SELECTION 1-2 AUTO 2-1 C1

REV	DESCRIPTION	DATE	DWN	CHKD	APVD	ECN
A	AS SUBMITTED	1/11				

COPYRIGHT INFORMATION
THIS DOCUMENT AND ALL INFORMATION CONTAINED HEREIN ARE THE PROPERTY OF SIEMENS AND/OR ITS AFFILIATES. THE SIEMENS COPYRIGHT AND ANY OTHER COPYRIGHT NOTICES THAT MAY BE SHOWN HERE ARE INCORPORATED BY REFERENCE. THIS DOCUMENT MAY NOT BE REPRODUCED, STORED OR USED IN ANY OTHER MANNER WITHOUT THE EXPRESS WRITTEN CONSENT OF SIEMENS. THIS DOCUMENT MAY ALSO BE SUBJECT TO RESTRICTIONS OF THE EXPORT CONTROL LAWS OF GERMANY, THE UNITED STATES AND OTHER COUNTRIES. YOU MUST ALSO OBSERVE ALL SUCH RESTRICTIONS WHEN DEALING WITH THE SIEMENS DOCUMENT. IF GERMAN, THE DOCUMENT, SUBJECT TO ALL RIGHTS AND RESTRICTIONS, AND ALL RELATED NOTES AND DRAWINGS, IS OR BECOMES SUBJECT TO REGULATIONS OF THE EUROPEAN UNION, THE UNITED STATES OR OTHER COUNTRIES, YOU AGREE TO REFRAIN FROM ACTIVITIES IN VIOLATION OF SUCH REGULATIONS AND IN AGREEMENT TO THESE TERMS AND CONDITIONS.

DESIGNER	DATE 1/11	TITLE INNER DOOR LAYOUT DUPLEX PUMP -MODIFY TO TRIPLEX PANEL 001
CHECKER	DATE 1/11	CUST MARDONA MARSHLAND CITY OF TORRANCE, CA
ENGINEER	DATE 1/11	
MANAGER	DATE 1/11	SIEMENS Water Technologies Control Systems Products PH: 651-766-2700
FILE F15654-001-(2)-SCH.A	SCALE	

PROJECT	CODE	DRAWING	SHEET	REV
F15654	001	E03	7 OF 7	A

STD: BORDER-C106-24X36D1 INTL REF: XXXXX PLANT:1160 BAR = 1" AT PLOT SCALE

APPENDIX VI

CONSTRUCTION ACTIVITIES
STORM WATER GENERAL PERMIT
ORDER NO. 99-08-DWQ

NOTICE OF INTENT
AND
NOTICE OF TERMINATION
FOR ORDER NO. 99-08-DWQ

Additional information about these requirements and documents can be obtained at

http://www.waterboards.ca.gov/water_issues/programs/stormwater/gen_const.shtml#const_permit

Go to the website and download these documents and include in your specifications